ORDER NO. VSD9408M636A

Service Manual

Volume 1

Panasonic S-VHS 625 VHS PAL Hi-Fi

Camera/ VTR

AG-DP800E

Sec. 1 *Operating Instructions*

Sec. 2 *Disassembly Procedures*

Sec. 3 *Schematic Diagram*

Sec. 4 *Circuit Board Diagrams*

Sec. 5 *Exploded Views & Replacement Parts List*

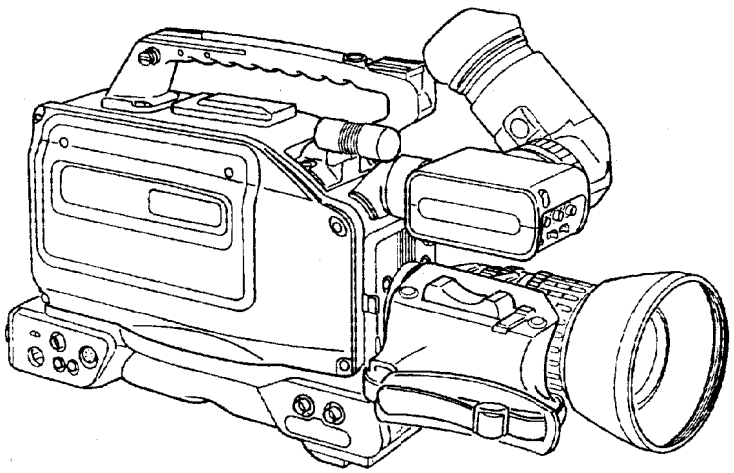

The Mechanism (Sec. 6), Electrical Adjustment (Sec. 7) and Block Diagram (Sec. 8), please refer to the Service Manual Volume 2 (Order No. VSD9408M636B).

The detail circuit description for this model, please refer to the Supplement Service Manual (Order No. VSD9406D210).

Panasonic

SPECIFICATION

Power Supply	DC12V(10.5～17V)
Consumption	23W(Recording mode:20W)
Operating Temperature	0℃～40℃
Humidity	35%～80%
Dimensions (W× H× D)	123× 296× 357(㎜)
Weight	4.5kg(incl.EVF)
	6.7kg(incl.EVF,Lens,Tape)

【CAMERA】	
Image Sensor	1／2inch Frame Interline Transfer (FIT) CCD× 3
Pixel:	450,000 pixel
H. Drive Frequency	13.5MHZ
Sesitivity	3200K 2000lux, f／8.0
Minimum Illumination	Approx.2lux(with f／1.4, +30dB)
S／N Ratio	More than 58dB
Horixontal Resolution	More than 700 lines (center)
Sampling Frequency	13.5MHz／27MHZ
Shutter Speed	1／60, 1／125, 1／250, 1／500, 1／1000, 1／2000, 1／4000, 1／8000
Synchro Scan Shutter	1／51.56～1／252.01
Gain Selection	0／+9／+18／+24／ Super High Gain+30dB
CC／ND Filter	3200K, 5600K, 5600K+1／8ND
Pickup System	Prism sysem (F1.4)
Lens Mount	Bayonet mount for 1／2" lens
Registration Error	Less than 0.03% (over entire range, excluding lens distortion)
Scene Files	Normal, A／B, Sparkling Fluorescent light, Special

【EVF】	
Display Tube	1.5" high-resolution monochrome tube
Horizontal Resolution	More than 550 lines (at center)
External Control	BRIGHT, CONTRAST, PEAKING, TALLY, ZEBRA, CHARACTER

【VTR】	
Recording System	4 rotary heads, helical scanning system, (S-VHS format)
Tape Speed	23.39㎜／sec
Tape Used	S-VHS, VHS tapes
Recording Time	180 minutes(with NV-E180)
FF／REW Time	Less than 9 minutes(with NV-E180)

【VIDEO】	
Television Standard	CCIR standard(625 lines, 50 fields) PAL colour signal
Modulation System	Luminance: FM azimuth recording Colour: converted subcarrier phase shift recording
Outputs LINE(BNC)	1.0Vp-p 75Ω
S-VHS(4P)	Y: 1.0Vp-p Ω C: 0.3Vp-p 75Ω
Horizontal Resolution	S-VHS: more than 400 lines VHS: more than 250 lines
S／N Ratio	S-VHS: more than 45 dB VHS: more than 45 dB

【AUDIO】	
Head	Normal A／C: 1 stationary head Hi-Fi audio: 2 rotary heads Erase: 1 full track erase
Track	Normal audio 2 tracks Hi-Fi audio 2 channels
Inputs MIC／LINE (XLR)	−60／−50／−40／−6／0／+4dBs 3 kΩ balance
Outputs LINE (PHONO)	−8 dBv low-imp. unbalance
EARPHONE	−60～−20 dBv, 8Ω
S／N Ratio	Better than 48 dB (Dolby ON, A curve, S-VHS tape)
Dynamic Range	More than 80 dB
Frequency Respose	Normal: 50Hz～10KHz Hi-FI: 20Hz～20KHz
Crosstalk	Normal: More than 40 dB Hi-Fi: More than 55 dB

【OTHERS】	
CAMERA OUT(BNC)	Composite signal 1.0Vp-p 75Ω
GENLOCK IN(BNC)	Black Burst signal 1.0Vp-p 75Ω
VTR Video out	Composite 1.0Vp-p 75Ω
Audio out	−20 dBv low-impedance unbalance
Start／Stop	Start: 5V, Stop: 0V
Tally	REC: 5V,Pause: 2.5V
LENS	12 pins
EXT DC	XLR 4P

【ACCESSORIES】

1.5" Viewfinder　　Battery mounting terminal(for NP-1)
Sholder strap

INTRODUCTION

This Service Manual contains the technical information (Operating Instructions, Disassembly, Schematic／Circuit Board Diagrams and Parts List) which will allow service personnel to understand and service the Panasonic S-VHS Camera／Recorder model AG-DP800E.

The this model has many special features as discribed later. These features make the AG-DP800 an ideal unit for production, business, education and entertainment.

CONTENTS

SPECIFICATIONS 1

SAFETYPRECAUTIONS 3

SERVICE INFORMATION 4

SECTION 1 OPERATING INSTRUCTIONS 1-1

System Chart 1-2
Control and Their Function 1-2
Attachment of Peripheral Units 1-11
Date & Time Setting 1-13
Power Supply 1-14
Black & White Balance Adjustment 1-17
Recording 1-19
Playback/Monitoring 1-22
Time Code 1-24
Menu Settings 1-25
Other Functions 1-35

SECTION 2 DISASSEMBLY PROCEDURES 2-1

2-1. Disassembly Flow Chart 2-2
2-2. Deteiled Disassembly Method 2-3
2-3. Screws 2-9
2-4. Dimensions 2-10

SECTION 3 SCHMATIC DIAGRAMS SCM-1

SECTION 4 CIRCUIT BOARD DIAGRAMS CBA-1

SECTION 5 EXPLODED VIEWS & REPLACEMENT PARTS LIST PRT-1

Servicing Fixtures & Tools List PRT-2
VTR Mechanism Section (1) PRT-2
VTR Mechanism Section (2) PRT-4
Frame & Casing Parts Section (1) PRT-6
Frame & Casing Parts Section (2) PRT-8
EVF Section PRT-10
Packing Parts section PRT-11
Electrical Replacement Parts List PRT-12

Lithium Battery

Warning
The lithium battery in this equipment must only be replaced by qualified personnel. When necessary, contact your local Panasonic supplier.

"The lithium battery is a critical component (type number CR2032 manufactured by Panasonic.)

It must never be subjected to excessive heat or discharge. It must therefore only be fitted in equipment designed specificaly for its use.

Replacement batteries must be of the same type and manufacturer. They must be fitted in the same manner and location as the original battery, with the correct polarity connections observed.

Do not attempt to re-charge the old battery or re-use it for any other purpose. It should be disposed of in waste products destined for burial rather than incineration."

CAUTION
Danger of explosion if battery is incorrectly replaced.
Replace only with the same or equivalent type recommended by the equipment manufacturer. Discard used batteries according to manufacturer's instructions.

VARNING
Explosionsfara vid felaktigt batteribyte. Använd samma batterityp eller en ekvivalent typ som rekommenderas av apparattillverkarer. Kassera använt batteri enligt fabrikantens instruktion.

ADVARSEL!
Eksplosionsfare ved fejlagtig håndtering.
Udskiftning må kun ske med batteri af samme fabrikat og type. Levér det brugte batteri tilbage til leverandøren.

VAROITUS
Paristo voi räjähtää, jos se on virheellisesti asennettu.
Vaihda paristo ainoastaan laitevalmistajan suosittelemaan tyyppiin. Hävitä käytetty paristo valmistajan ohjeiden mukaisesti.

SAFETY PRECAUTIONS

GENERAL GUIDELINES

1. When servicing observe the original lead dress. If a short circuit is found, replac all parts which have been overheated or damaged by the short circuit.
2. After servicing, see to it that all the protectiv devices such as insulation barriers, insulation papers shields are properly installed.
3. After servicing make the following leakage current checks to prevent the customer from being exposed to shock hazards.

LEAKAGE CURRENT COLD CHECK

1. Unplug the AC cord and connect a jumper between the two prongs onthe plug.
2. Measur the resistance value, with an ohm meter, between the jumpered AC plug and each exposed metallic cabinet part on the equipment such as screwhead connectors, contrl shafts, etc. When the exposed metallic part has a return path to the chassis, the reading shoulb be between 1MΩ and 5.2MΩ .
   When the exposed metal dose not have a return path to the chassis, the reading must be ∞ .

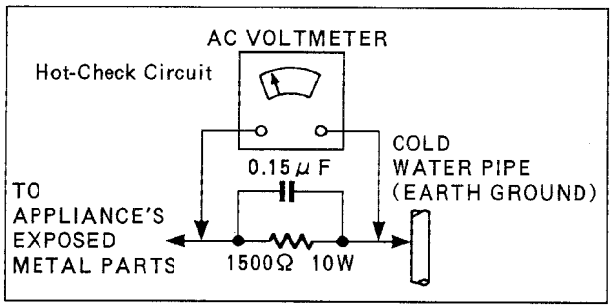

Figure 1

LEAKAGE CURRENT HOT CHECK (See Figure 1)

1. Plug the AC cord directly into the AC outlet.
   Do not use an isolation transformer for this check.
2. Connect a 1.5KΩ , 10W resistor, inparallel with 0.15μF capacitor, between each exposed metallic part on the set an a good earth ground such as a water pipe, as shown in Figure 1.
3. Use an AC voltmeter, with 1000 ohms/volt or more sensitivity, to measur the potential across the resistor.
4. Check each exposed metallic part, and measure the voltage at each point.
5. Reverse the AC plug in the AC outlet repeat each of the above measurements.
6. The potantial at any point should not exceed 0.75 volts RMS. A leakage current tester (Simpson Model 229 equivalent) may be used to make the hot checks, leakage current must not exceed 1/2 milliamp. In case a measurement is outside of the limits specified, there is a possiblity of a shock hazard. and the equipment should be repaired and rechecked before it is returned to the customer.

ELECTROSTATICALLY SENSITIVE(ES) DEVICES

Some semiconductor (solid state) devices can be damaged easily by static electricity. Such components commonly are called Electrostatically sensitive (ES) Devices. Examples of typical ES devices are integrated circuits and some field-effect transistors and semiconductor "chip" components. The following techniques should be used to help reduce the incidence of component damage caused by static electricity.

1. Immediately before handling any semiconductor component or semiconductor-equipped assembly, drain off any electrostatic charge on your body by touching a known earth ground.
   Alternatively, obtain and wear a commercially available discharging wrist strap device, which should be removed for potential shock reasons prior to applying power to the unit under test.
2. After removing an electrical assembly equipped with ES devices, place the assembly on a conductive surface such as aluminum foil, to prevent electrostatic charge buildup or exposure of the assembly.
3. Use only a grounded tip soldering iron to solder or unsolder ES devices.
4. Use only an anti-static solder removal device classified as "anti-static" can generate electrical charges sufficient to damage ES devices.
5. Do not use freon-propelled chemicals. These can generate electrical charges sufficient to damage ES devices.
6. Do not remove a replacement ES device from its protective package untilimmediately before you are ready to install it. (most replacement ES devices are packaged with leads electrically shorted together by conductive foam, aluminum foil or comparable conductive material).
7. Immediately before removing the protective material from the leads of replacement ES device, touch the protective material to the chassis or circuit assembly into which the device will be installed.
   CAUTION: Be sure no power is applied to the chassis or circuit, and observe all otner asfety precautions.
8. Minimize bodily motions when handling unpackaged replacement ES devoces. (Otherwise harmless mother such as the brushing together of your clothes fabric or the lifting of your foor from a carpeted floor can generate static electricity sufficient to damage an ES device).

SERVICE INFORMATION

1. HOUR METER RESET (Drum rotation time)

1. Turn off POWER.
2. Open the Right Panel. (See Section 2: Dsiassembly Procedures)
3. Connect a jumper wire between TP6906 and TPG(GND) on the LCD C.B.A.
4. Turn the POWER while the [RESET] button is depressed.

2. ERROR LOG DATA RESET

1. Turn off POWER.
2. Open the Right Panel. (See section 2: Disassembly Procedures)
3. Connect a jumper wire between TP6907 and TPG(GND) on the LCD C.B.A.
4. Turn the POWER while the [START] button is depressed.

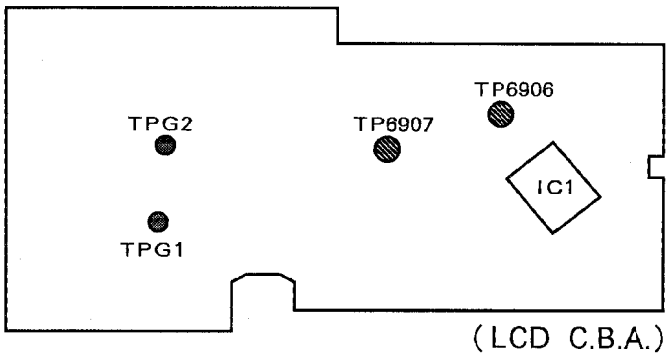

3 . SERVICE EXTENSION CABLE

Use the following extension cable when checking the individual circuit boards.

Part No.	VFK0993
Part Name	80P EXTENSION CABLE

[Connection]

PROCESS C.B.A. ~ VIDEO C.B.A.
CN3002 CN3001

PROCESS C.B.A. ~ AUDIO/SYSCON C.B.A.
CN3003 CN6001

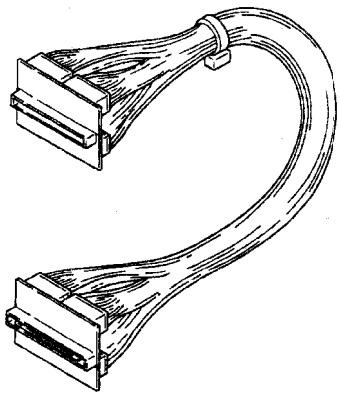

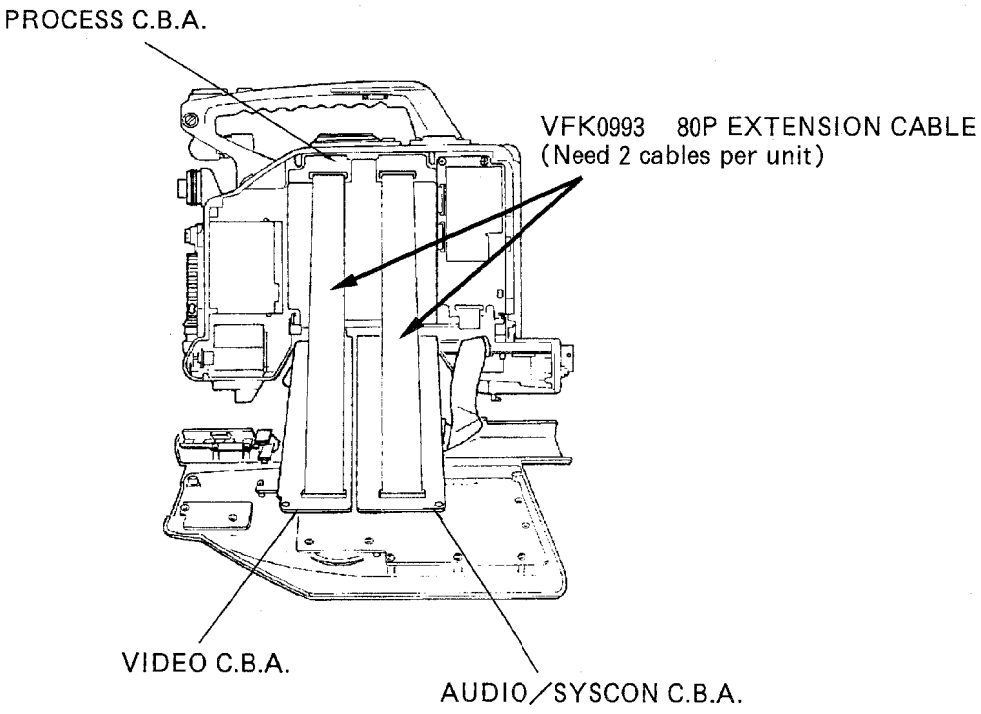

SECTION 1

OPERATING INSTRUCTIONS

CONTENTS

System Chart ····· 1-2

Control and their Functions ····· 1-3

Attachement of Peripheral Units ····· 1-11
- Attaching the lens ····· 1-11
- Attaching the viewfinder ····· 1-11
- Backup Battery ····· 1-12

Date & Time Settings ····· 1-13
- Initialing the Memory ····· 1-13
- Setting the date and time ····· 1-14

Power Supply ····· 1-14
- Using the AU-BP402 battery pack ····· 1-14
- Using the AC Power (AU-B110) ····· 1-15
- Using the Anton Bauer and Sony's NP-1 battery pack ····· 1-16

Black & White Balance Adjustments ····· 1-17
- Black Balance ····· 1-17
- White Balance ····· 1-18

Recording ····· 1-19
- Normal recording ····· 1-19
- Simple editing ····· 1-20
- Audio recording ····· 1-20
- Power save mode ····· 1-21
- Rec review ····· 1-21

Playback/monitoring ····· 1-22
- Playback ····· 1-22
- Cue and review playback ····· 1-23
- monitoring ····· 1-23

Time Code ····· 1-24
- Time code generator settimgs ····· 1-24

Menu Settings ····· 1-25
- Main Manu ····· 1-26
- EVF Display Menu ····· 1-27
- Camera Setting Manu ····· 1-27
- Scene File Menu ····· 1-29
- VTR Operation Menu ····· 1-31
- Time/Date Menu ····· 1-32
- Time Code Menu ····· 1-32
- Audio Menu ····· 1-33
- Battery Menu ····· 1-34
- Diagnosis Menu ····· 1-34

Other Functions ····· 1-35
- Connector signals ····· 1-35
- Handling the Phantom mic ····· 1-35

System Chart

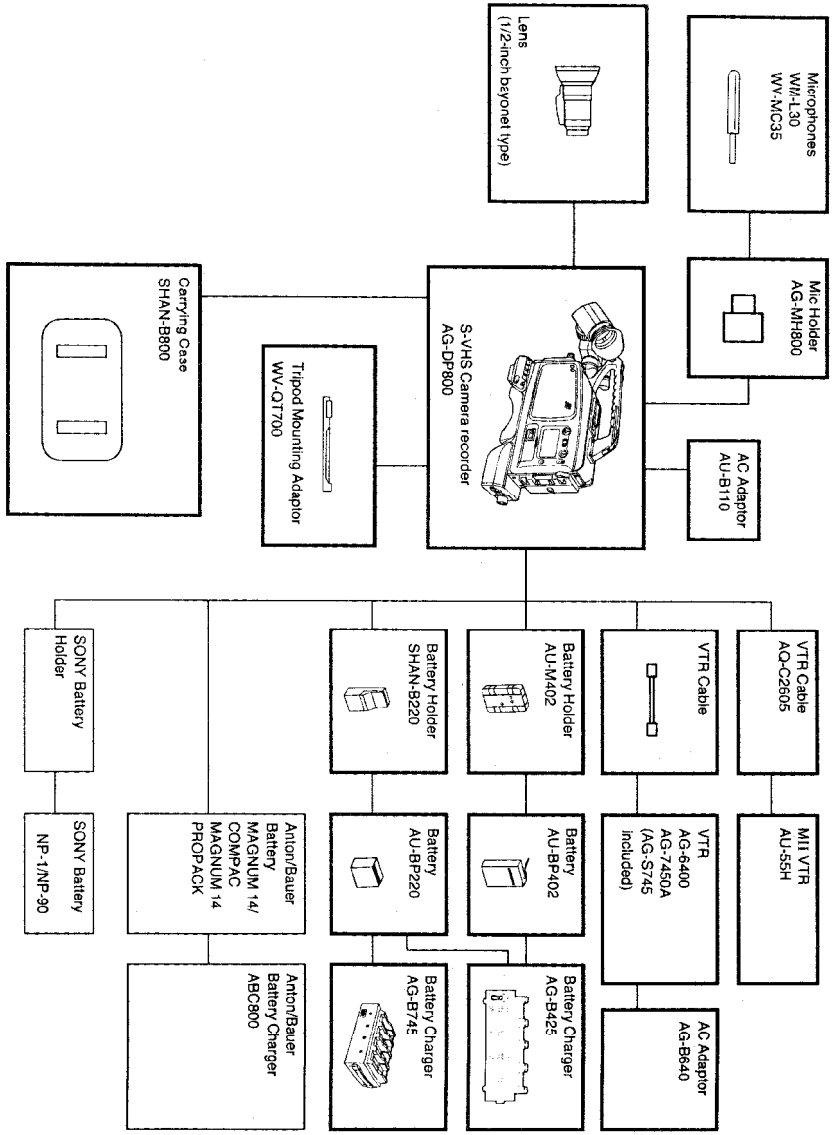

Controls and their Functions

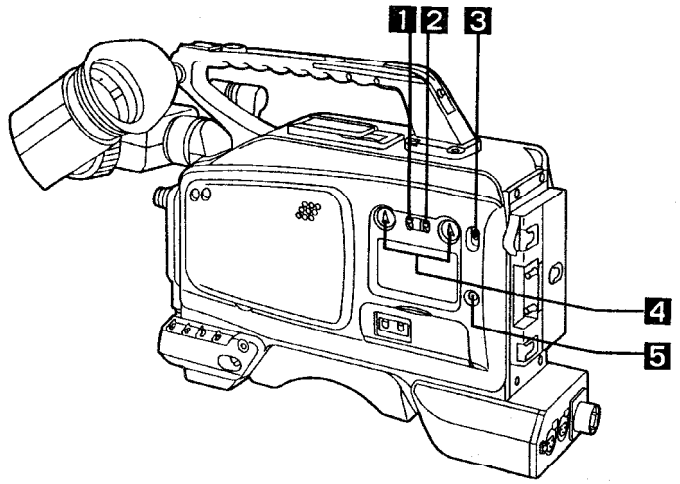

1 AUDIO AGC Switch

ON: The CH1 and CH2 recording levels are adjusted automatically. At this position, the CH1 and CH2 audio level controls do not function.
LIMIT: The limiter is activated only when the input level is excessively high.
OFF: The CH1 and CH2 recording levels can be adjusted manually.

2 AUDIO HI-FI/NORM Switch

This switch selects Hi-Fi audio or normal sound to be indicated and output as the sound of the level meter, AUD O OUT connectors and speakers.

3 LIGHT Switches

Set these to the ON position to light up the display area.

4 Audio Level Controls

To adjust the audio levels, turn the CH1 and CH2 controls while observing the level meter, and adjust the input volume of each channel.
Normal audio and Hi-Fi audio signals are adjusted simultaneously to the same level.

5 RESET Button

The display is cleared to zero when this button is pressed while the display area is in the counter or time code generator (TCG) setting mode.

Controls and their Functions (Continued)

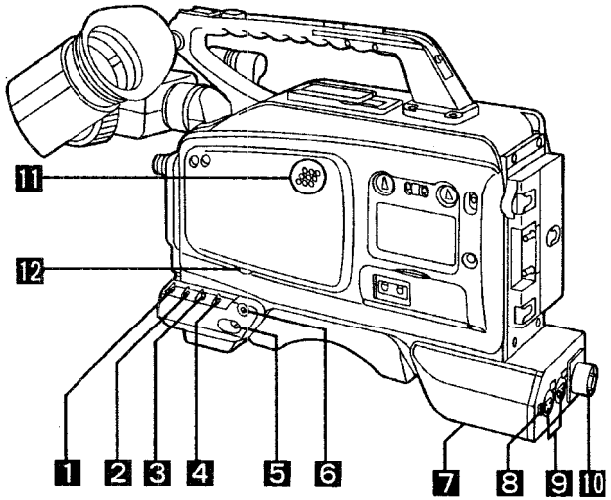

1 GAIN Selector Switch

When the camera screen is dark, change the position of this switch to increase the gain and make the screen brighter.

0 dB: The switch is normally kept at this position.

HIGH: The gain of the camera video amplifier is increased to the value (9 dB, 18 dB, 24 dB or super high gain) which has been preset using the on-screen menu. (Increasing the gain results in an increase in noise.)

AGC (Camera AGC function): The gain is automatically adjusted to the appropriate value between 0 dB and 24 dB depending on the brightness of the screen.
(If the lens iris is in the manual setting, it will be forcibly set to auto.)
The gain is set to 0 dB when the light is adequate, and it is increased automaticaly when the lens iris is close to being kept open all the time and yet the amount of light is insufficient.
*The camera AGC will not function properly when a lens without an automatic aperture function is used.

2 AWB Memory Selector Switch

A or B: When the front panel AUTO W/B BAL switch is set to AWB, the white balance is adjusted automatically, and the adjustment value is automatically stored in the A or B memory.

PRE: The white balance is preset to the color temperature of 3200°K (the illuminance temperature of a halogen lamp). At this position, the front panel AUTO W/B BAL switch does not function when it is set to AWB.

3 OUTPUT Selector Switch

This selects either the video signals being shot by the camera or the colour bar signals.

CAM: The video signals shot by the camera are output.

BAR: The colour bar signals are output.

4 SHUTTER Switch

This sets the electronic shutter ON or OFF.

OFF: The electronic shutter is not activated.

ON: The electronic shutter is activated. The shutter speed is set using the SET + or SET – switch.

S/S: The synchro scan shutter mode is established.
The shutter speed can be changed almost continuously from about 1/60 to 1/200 by operating the SET + and SET – switches.

5 POWER Switch

ON: The entire camera recorder is operated.

SAVE: The recorder is set to the power save status.
The VTR START (REC start) operation can be performed but it takes some moments for the recording to commence. The power save mode is restored when the VTR START (REC stop) button is pressed.

OFF: Power to the camera recorder is switched off.

6 MODE CHECK Button

This enables the settings of the camera switches to be checked on the viewfinder.

7 BREAKER Button (Bottom panel)

If trouble should cause an excessively high current to flow inside the camera recorder, the circuit breaker is tripped to cut off the power automatically and protect the unit. Push this button in after inspecting inside the product and taking corrective action. The power is restored if no trouble has occurred.

8 Earphone jack

The sound can be monitored by connecting an earphone to this jack. When connected, no sound is heard through the speaker.

9 Audio Input Connectors

External microphones or line input signals are connected to these connectors.

10 26P VTR Connector

This is for a back-up VTR. The AG-6400 VTR or similar model can be connected.

11 Speaker

The sound can be monitored through this speaker.
- The sound from the speaker is automatically cut off when an earphone is connected to the earphone jack.
- The MONITOR switch is used to select the channel whose sound is to be monitored.

12 Audio Monitor Level Control

This is used to adjust the volume of the sound which is being monitored.

Controls and their Functions (Continued)

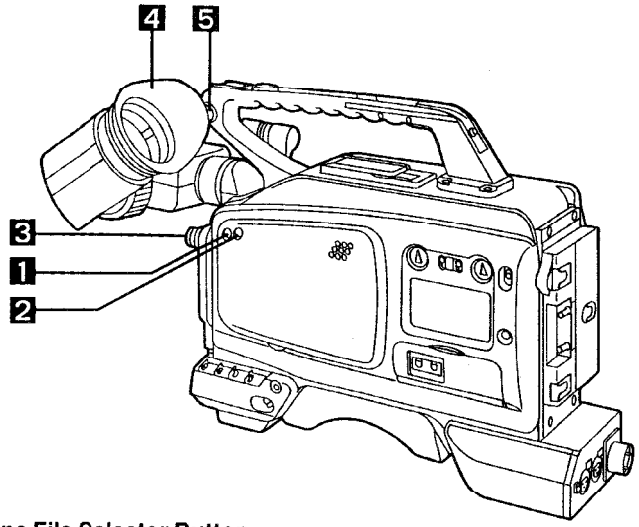

1 Scene File Selector Button

This enables scene files to be selectd. For details, refer to the next page.

2 Super Iris Button

Press this button to toggle between the normal mode and super iris mode.

Normal mode: Normal shooting takes place in this mode.
Super iris mode: Used for backlight shooting.
Note: This function operates when the lens is in the automatic iris adjustment mode.

3 Filter Selector Control

Set this control as shown below according to the light sources illuminating the subject.
Control No. and colour temperature of filter

Control No.	Colour temp.	Shooting condition
1	3200 K	Sunrise, sunset, subjects illuminated by incandescent bulbs
2	5600 K+ 1/8 ND	Outdoors under a clear sky
3	5600 K	Outdoors on a cloudy/rainy day

4 Viewfinder

5 Shoulder Strap Mount

This is used to attach the shoulder strap provided with the product.

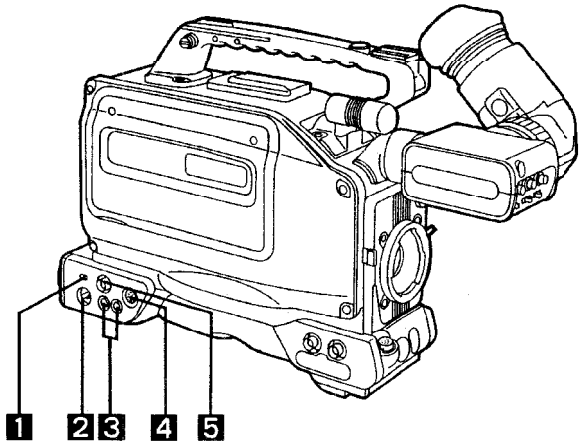

1 Power Selector Switch

This selects the power supply to be used.
BATT/EXT DC: Set to this position when supplying power from the external DC input socket or battery.
VTR: Set to this position when supplying power from the 26P VTR connector.

2 External DC Input Socket

The AC adaptor is connected to this external power input socket, and when it is connected, power is automatically supplied from the external source.

3 AUDIO OUT Connectors (Phono jacks)

4 VTR VIDEO OUT Connector (Y/C)

5 VTR VIDEO OUT Connector (BNC)

Scene file selection

When the scene file selector button is pressed, the settings change in the sequence given below:

→NORMAL→FILE A→FILE B→FLUO.LAMP→SPARKLING→SPECIAL→

NORMAL: For the standard picture quality
FILE A: For file A with the picture quality set by the user
FILE B: For file B with the picture quality set by the user
FLUO.LAMP: For improved color reprocuction under fluorescent lighting
SPARKLING: For darkening the color and making the picture sharper.
SPECIAL: For achieving the reproduction of skin complexions similar to those which are obtained by Plumbicon (pick-up) tubes; the picture quality is similar to that obtained by the broadcasting cameras equivalent to those (AQ series) made by Panasonic.

Controls and their Functions (Continued)

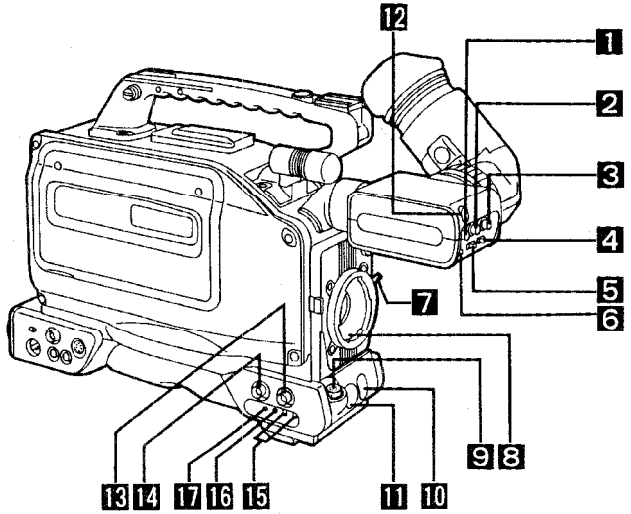

1 **PEAKING Control**
Turning this control intensifies the outlines of the images in the viewfinder for easier focusing. However, this has no effect on the camera's output signals.

2 **CONTRAST Control**
This adjusts the contrast of the image in the viewfinder. However, it has no effect on the camera's output signals.

3 **BRIGHT Control**
This adjusts the brightness of the image in the viewfinder. Turning it clockwise makes the image brighter. However, it has no effect on the camera's output signals.

4 **TALLY ON/OFF Switch**
ON: The tally lamp on the front of the viewfinder lights.
OFF: The tally lamp on the front of the viewfinder does not light.

5 **ZEBRA ON/OFF Switch**
ON: A zebra pattern is displayed in the viewfinder.
OFF: No zebra pattern is displayed.

6 **CHARACTER ON/OFF Switch**
This turns the character which are displayed in the viewfinder ON or OFF.
ON: Characters are displayed in the viewfinder.
OFF: No characters are displayed in the viewfinder.

7 **Lens Clamp Lever**
After attaching the lens to the lens mount, tighten this lever to hold the lens in place.

8 **Lens Mount (Bayonet type)**
The lens is attached to this mount.

9 **LENS Connector (12-pin)**
The connecting cable of the lens is connected to this connector. For a detailed description of the lens to be used, refer to the Operating Instructions accompanying the lens.

10 **AUTO W/B (WHITE/BLACK) BAL Switch**
AWB: The white balance is adjusted automatically.
Setting the AWB Selector switch at the side to A or B and then operating the AUTO W/B BAL switch enters the adjusted value into memory A or B. Bear in mind that this operation will not be performed when the selector switch has been set to PRE.
ABB: The black balance is adjusted automatically.
The value to which it has been adjusted is entered in an exclusive memory. When it is released, the switch automatically returns to its centre position.

11 **VTR START/STOP Button**
This is for starting or stopping the recording.

12 **TALLY Lamp**
This lights while the image being shot by the camera is being recorded by the VTR. It lights and flashes in tandem with the TALLY lamp inside the viewfinder.

13 **CAMERA GENLOCK IN Connector (BNC)**
To apply genlock to the camera recorder from an external unit, connect the unit to this connector.

14 **CAMERA VIDEO OUT Connector (BNC)**
The camera's encoder (composite signal) output is sent to this connector.

15 **SC Rough Adjustment Switches**
These roughly adjust the subcarrier phase in the genlock mode.

16 **SC Fine Control**
This finely adjusts the subcarrier phase in the genlock mode.

17 **Horizontal Sync Phase Control**
This adjusts the horizontal sync phase in the genlock mode.

Controls and their Functions (Continued)

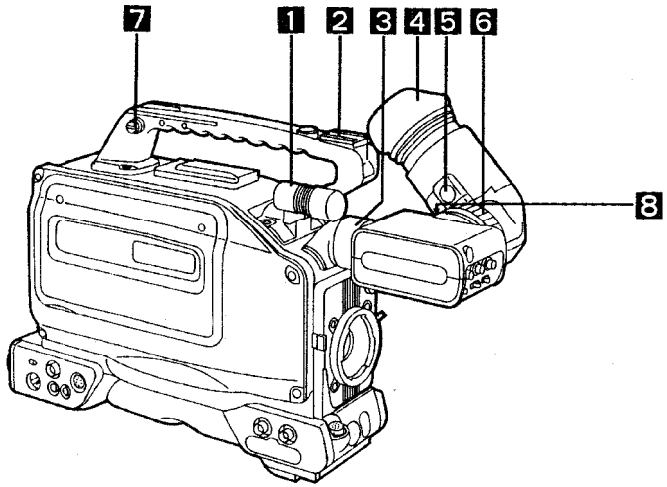

1 **Microphone**

This is a compact, unidirectional type of microphone. However, by replacing it with the optional holder, a highly directional microphone can be attached instead.

2 **Accessory Hole**

This is for mounting video lights or other accessories.

3 **Viewfinder Clamp Ring**

This is used to attach and detach the viewfinder. By loosening the clamp ring, the viewfinder can be rotated by 90° so that it is pointing upward.

4 **Eye Cup (Eyepiece)**

5 **Eye Cup Removal Lever**

This is used to remove the eye cup. Move the lever in the direction shown by the arrow and then simply slide the eye cup to remove it.

6 **Viewfinder Stopper**

This is used to adjust the viewfinder's position. Loosen the stopper and move the viewfinder to the left or right to adjust its position. After the position has been adjusted, tighten the stopper to hold the viewfinder in place.

7 **Shoulder Strap Mount**

This is used to attach the shoulder strap provided with the product.

8 **Diopter Adjustment Control**

This is adjusted to the eyesight of the operator so that he or she can clearly see the images on the viewfinder screen.

9 **Eyepiece front/back adjustment ring**

At the unlock position, the eyepiece can be moved further toward the front or back. After moving the eyepiece to the desired position, lock the ring to secure it there.

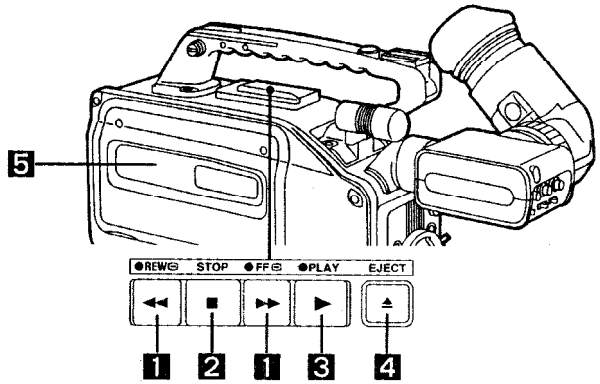

Function Buttons

1 **REW (Rewind)/FF (Fast Forward) Buttons**

- When the REW or FF button is pressed while the tape has stopped traveling, the tape is rewound or fast forwarded normally in the E-E mode.
- When pressed during tape play, the tape is reviewed or cued at approximately 5 times the normal tape speed.

2 **STOP Button**

The tape stops traveling when this button is pressed. It does not function during recording. To stop the tape during recording, first set the VTR to the REC/PAUSE mode and then press the STOP button.

3 **PLAY Button/Lamp**

Tape play commences when this button is pressed, and the lamp lights.

4 **EJECT Button**

When this is pressed, the cassette holder is raised to enable a cassette to be inserted or removed. It does not function when the VTR is in the REC or REC/PAUSE mode. To eject a tape in either of these modes, the tape should be stopped first and then the EJECT button pressed.

5 **Cassette Holder**

This is the slot into which the cassette tape is inserted.

Controls and their Functions (Continued)

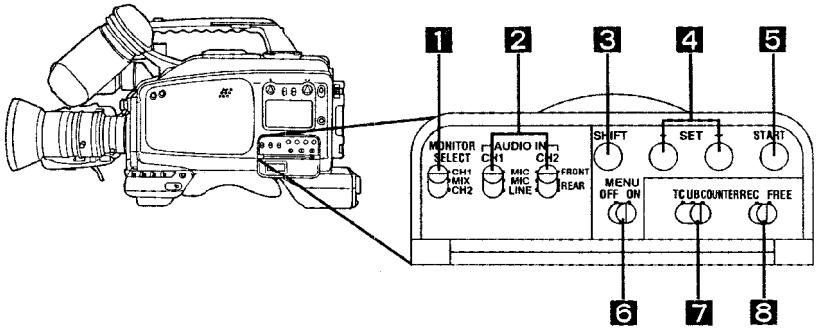

1 **MONITOR Switch**

This is for selecting the speaker or earphone sound.
CH1: The CH1 sound can be monitored.
MIX: The CH1 and CH2 mixed sound can be monitored.
CH2: The CH2 sound can be monitored.

2 **AUDIO IN Selector Switches**

These switches select the CH1 and CH2 audio inputs.
FRONT MIC: For recording the audio signals from the microphone built into the camera.
REAR MIC: For connecting an external microphone to the audio input connector (XLR 3P) on the rear panel and recording its audio signals.
REAR LINE: For connecting line signals to the audio input connector (XLR 3P) on the rear panel and recording them.

3 **SHIFT Button**

This is used for time code generator and menu item settings.

4 **SET –, SET + Buttons**

These are used for changing the time code generator, menu, electronic shutter speed or synchro scan shutter speed settings and for adjusting the VTR tracking.

5 **START Button**

Press this button to indicate the time code generator setting on the display. The button is used to make the time code generator and menu item settings.

6 **MENU ON/OFF Selector Switch**

OFF: The switch is normally kept at this position when the camera recorder is being operated.
ON: For displaying or changing a menu item.

7 **TC/UB/COUNTER Selector Switch**

TC: For setting or displaying the time code data.
UB: For setting or displaying the user bit data.
COUNTER: For indicating the reel counter on the display.

8 **REC/FREE Selector Switch**

REC: For counting the time code only in the VTR's recording mode; REGEN operation is performed when LTC is ON (set using the menu item).
FREE: For counting the time code in the same way as for the time regardless of the VTR mode.

Controls and their Functions (Continued)

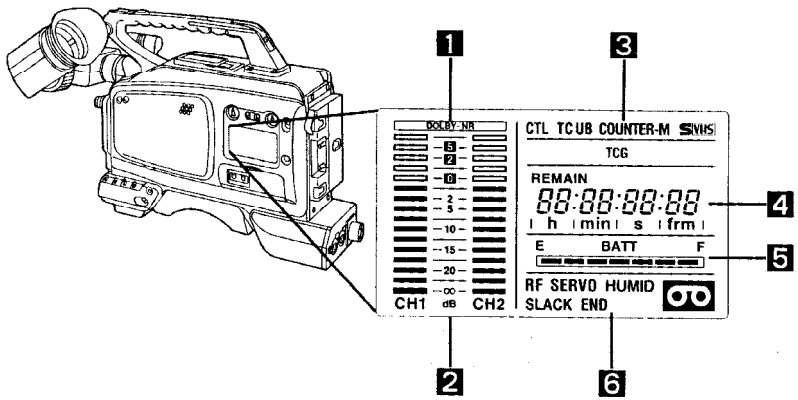

Display

1 **DOLBY-NR display** — Lights when the DOLBY NR menu item has been set to ON.

2 **Audio level meter** — Indicates the CH1 and CH2 audio levels.

3 **Mode displays**

TC: Lights when the counter is in the TC (time code) mode.
UB: Lights when the counter is in the UB (user bit) mode.
COUNTER: Lights when the counter is in the reel count mode.
TCG: Lights when the counter is in the TCG (time code generator) mode.
–M: Lights in the counter memory mode (0000 stop mode).
CTL: The counter memory mode is set using the menu item.
S VHS: Lights in the S-VHS mode.
▭: This denotes that a cassette tape has been loaded.

4 **Counter**

This indicates the time code and user bit data in units of hours, minutes, seconds and frames. It serves as a 4-digit counter in the reel count mode.

REMAIN
88:88:88:88
h min s frm

5 **Remaining battery level display**

This indicates the remaining battery level.
The battery is set using the menu item. For further details, refer to "How to set the menu items" (page 52).
Different kinds of batteries and their operating times are shown in the table below. (The operating times shown apply when the unit is used in the continuous recording mode.)
Bear in mind that the actual operating time will vary greatly depending on what shooting methods are used, whether old or new batteries are used and on other such conditions.

Battery			Operating time (during continuous recording)
Model number	Manufacturer	Capacity	
TRIMPAK 14 DIGITAL	Anton/Bauer	40 WH	90 minutes
DIGITAL HD MAG 14	Anton/Bauer	60 WH	160 minutes
AU-BP402	Panasonic	4 AH	140 minutes
AU-BP200	Panasonic	2.2 AH	70 minutes
NP-1B	SONY	2.3 AH	70 minutes

6 **Warning displays**

RF: Flashing denotes that the video heads are clogged.
SERVO: Flashing denotes that the servo system is not locked.
HUMID: Flashing denotes that condensation has formed on the cylinder.
SLACK: Flashing denotes tape slack or some other problem in the tape transport system.
END: Flashing denotes that the tape has come to its end.

Viewfinder display

LED displays

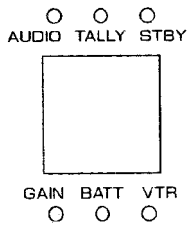

AUDIO (yellow): Not used by this system.

TALLY (red): Lights during recording; flashes during tape approach.

STBY (green): Lights in the power save mode.

GAIN (yellow): Lights when the camera gain is increased or the camera AGC mode is established.

BATT (yellow): Flashes when the battery has run down.

VTR (yellow): Lights or flashes when trouble has developed in the VTR.

Character displays (normal displays)

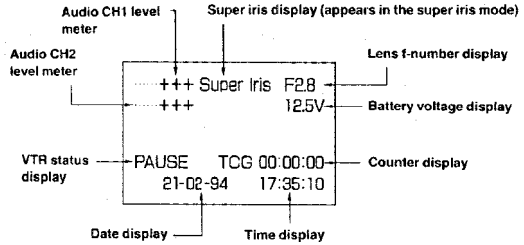

- These display appear when the CHARACTER switch on the front of the viewfinder is at the ON position.
- Each of the display can be turned OFF using the menu settings.

Character displays (displays when changes have occurred)

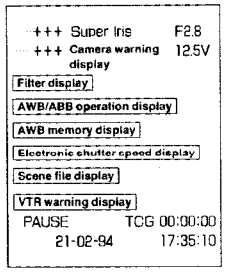

- **Camera warning display**
  A warning message appears when AWB or ABB has not been set properly.
- **Filter display**
  The filter number and name are displayed for about 3 seconds when the CC filter setting is selected.
- **AWB/ABB operation display**
  "ACTIVE" appears while the AWB or ABB operation is in progress. "OK" appears upon completion of the operation.
- **AWB memory display**
  This indicates the AWB channel A and B memory statuses and switch status. The displays appear for about 3 seconds when the AWB switch setting is selected.
- **Electronic shutter speed display**
  This indicates the electronic shutter speed. When the electronic shutter has been selected or the shutter speed has been changed, the display appears for about 3 seconds.
- **Scene file display**
  This indicates the name of the present scene file for about 3 seconds when the scene file selector button is pressed.
- **VTR warning display**
  This appears when trouble has occurred in the VTR.

14× Power Zoom Lens

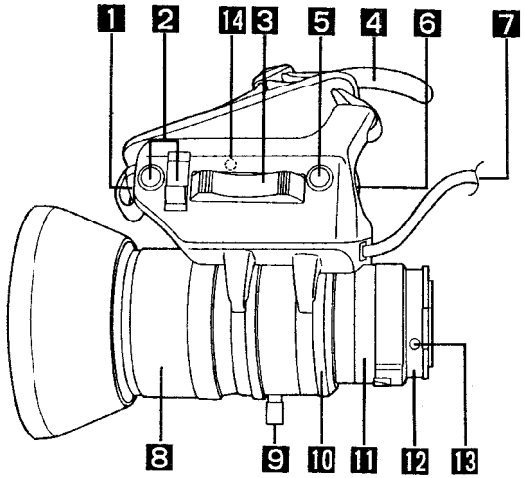

1 Automatic Iris Control

This enables the automatic iris speed to be adjusted.
The control can be found inside when the rubber cap is removed.
The speed is increased by turning the control clockwise but bear in mind that turning it too far will cause hunting (the operation does not stop).
Be absolutely sure to adjust the control when replacing the lens or when attaching the lens for the first time.

2 Lens Iris Selector Switch [IRIS]

A: The iris is adjusted automatically.
M: For adjusting the iris manually.
Note: When the camera's AGC function has been activated, the iris is adjusted automatically even if this switch is set at the [M] position.

3 Power Zoom Control Switch

The zoom can be controlled electrically by setting the power/manual zoom selector switch to SERVO and by pressing this control switch. The zoom speed changes according to how firmly the switch is pressed.

4 Hand Strap

Adjust the strap to fit the size of your hand.

5 Return Switch [RET/REC CHECK]

This switch is used to check recordings. When it is pressed during recording pause, the recording check function is activated to play back the section which has been recorded and then establish the recording pause mode.

6 VTR Start/Stop Switch

This easily accessible switch is for handily starting and stopping the VTR recording. When it is pressed once, recording commences; when pressed again, recording stops. When this lens is mounted on the camera recorder, the VTR can be controlled by either this switch or the VTR start/stop switch on the camera.

7 Lens Cable (12-pin)

This cable is connected to the lens connector.

8 Focus Ring

Turn this ring to bring the subject into focus.

9 Zoom Ring

The size of the picture can be adjusted by setting the power/manual zoom selector switch to MANU and then turning this ring.

10 Iris Ring

The iris is adjusted by setting the lens iris selector switch to M and then turning this ring.
Be absolutely sure to adjust this ring when replacing the lens or when attaching the lens for the first time.

11 Flange Back Control Ring

The flange back adjustment is performed by loosening the flange back clamp knob and then turning this ring.

12 Macro Ring

Close-up shooting is achieved by setting the lens all the way to the wide position and then rotating this ring.

13 Flange back clamp knob

Use this knob for clamping purposes after the flange back has been adjusted.

14 Power/Manual Zoom Selector Switch

When this is set to SERVO, the zoom can be adjusted using the power zoom control switch; when set to MANU, it can be adjusted using the zoom ring.

Attachment of Peripheral Units

Attaching the lens

1 Align the lens with the lens mount on the camera recorder, insert the lens into the mount, and secure it in place using the lens clamp lever.

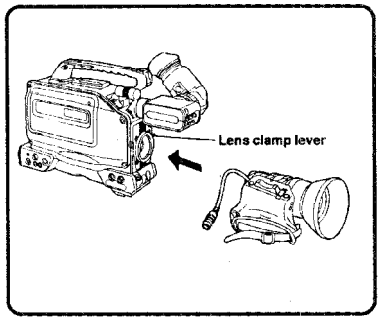

2 Connect the cable to the LENS connector, and secure it in place using the cable clamp.

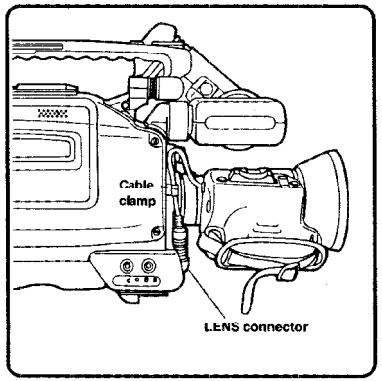

NOTE

■ For details on the handling of the lens, refer to the Operating Instructions accompanying the lens.
•When the lens has been detached from the camera recorder, attach the lens cap to protect the unit.

Attaching the viewfinder

1 Align the positions of the marks (red) on the viewfinder and camera recorder, and insert the viewfinder.

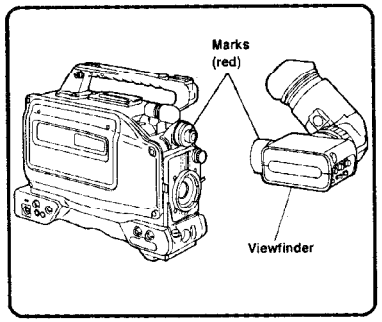

2 Turn the viewfinder clamp ring to clamp the viewfinder in place.

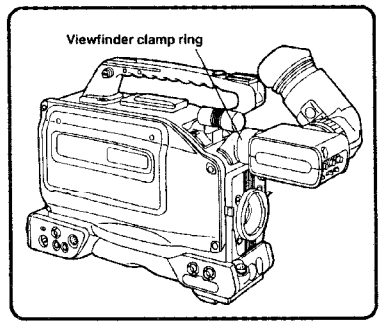

By loosening the clamp ring, the viewfinder can be rotated by 90°.

Attachment of Peripheral Units (Continued)

Attaching the microphone holder

1 **Remove the microphone of the main unit.**

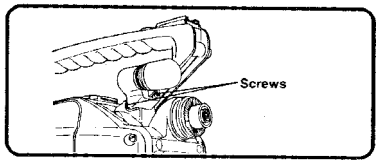

To remove the microphone, first remove the two screws and then remove the connector.

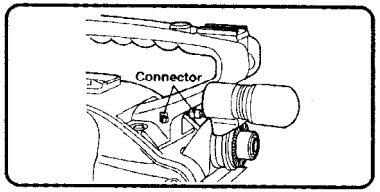

2 **Attach the microphone holder.**

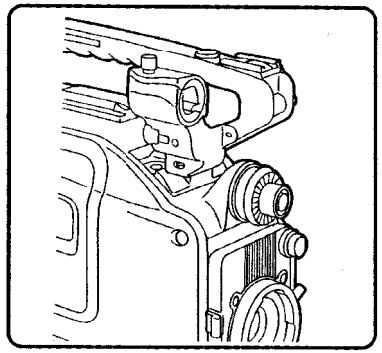

Attach the holder by following the procedure for removing the microphone in reverse.

Replacing the Backup (Lithium) Battery

The unit is shipped from the manufacturing plant with the back-up battery already installed. There is no need to install this battery immediately after purchasing the unit. Skip this section and move on to the next procedures which are for initializing the memory and setting the date and time.

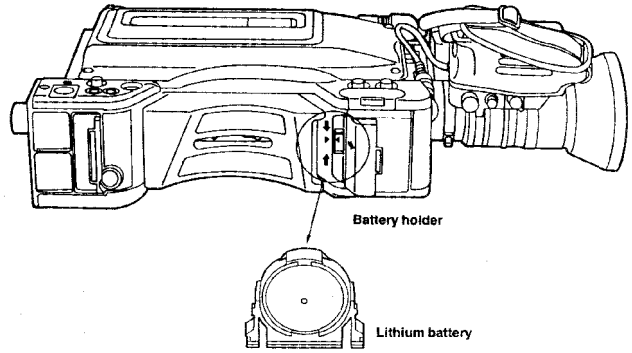

1 **Remove the battery holder from the main unit.**

2 **Insert the lithium battery into the battery holder. (Make sure the "+" and "—" polarities are aligned properly.)**

3 **With the triangular marks on the main unit and on the battery holder facing each other, fit the battery holder back into the main unit.**

NOTE

The service life of this battery is approximately one year. When it has mostly discharged, the "BACK UP BATT EMPTY" display will appear in the viewfinder for several seconds when the power switch is set to ON.
Replace with a new lithium battery (Panasonic CR2032).

Initializing the Memory and Setting the Date and Time

When the back-up battery has been replaced, initialize the memory and set the date and time before proceeding with any other operation.

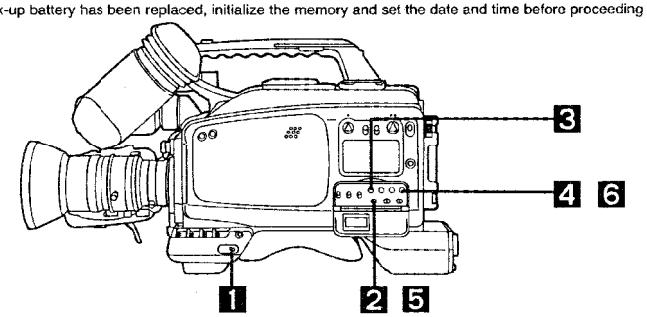

1 Set the POWER switch to ON.

2 When the MENU ON/OFF selector switch is set to ON, the setting screen (MENU) appears in the viewfinder.

```
   MAIN MENU
 01 EVF DISPLAY
 02 CAMERA SETTING
 03 VTR OPERATION
 04 TIME/DATE
 05 TIME CODE
 06 AUDIO
 07 BATTERY
→08 DIAGNOSIS
 09 MENU INITIALIZATION
 ---END OF DATA---
```

→

```
  - DIAGNOSIS -
 01 ERROR LOG DATA
 02 CYLINDER      1800h
 03 CAMERA Ver  (1.0)1.1
 04 SERVO  Ver  A(1.1)
 05 SYSCON Ver B(1.2)

→06 MENORY  INIT.?

  **PREVIOUS MENU
 ---END OF DATA---
```

3 While monitoring the viewfinder display, press the SHIFT button until the arrow at the far left is aligned with "DIAGNOSIS".

4 When the START button is pressed, the self-diagnosis (DIAGNOSIS) screen appears.

5 Press the SHIFT button until the arrow at the far left is aligned with "MEMORY INIT.?".

6 Press the START button.

"INIT.?" now changes to "INITIALIZED".
The memory initialization is now completed. The next step is to set the date and time. (See next page.)

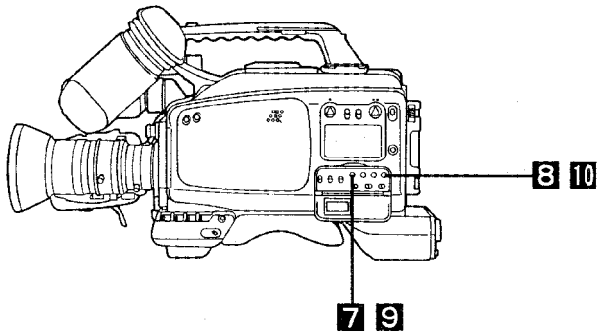

7 Press the SHIFT button until the arrow at the far left is aligned with "PREVIOUS MENU".

```
  - DIAGNOSIS -
 01 ERROR LOG DATA
 02 CYLINDER      1800h
 03 CAMERA Ver  (1.0)1.1
 04 SERVO  Ver  A(1.1)
 05 SYSCON Ver B(1.2)

 06 MENORY  INIT.?

→**PREVIOUS MENU
 ---END OF DATA---
```

→

```
   MAIN MENU
 01 EVF DISPLAY
 02 CAMERA SETTING
 03 VTR OPERATION
→04 TIME/DATE
 05 TIME CODE
 06 AUDIO
 07 BATTERY
 08 DIAGNOSIS
 09 MENU INITIALIZATION
 ---END OF DATA---
```

8 When the START button is pressed, the MAIN MENU appears.

9 Press the SHIFT button until the arrow at the far left is aligned with "TIME/DATE".

10 When the START button is pressed, the calender and clock setting screen appears.

```
  - TIME/DATE -
→01 YEAR          94
 02 MONTH         07
 03 DAY           06
 04 HOUR          16
 05 MINUTE        55

  *TIME/DATE SET
 **PREVIOUS MENU
 ---END OF DATA---
```

Initializing the memory and setting the date and time (Continued)

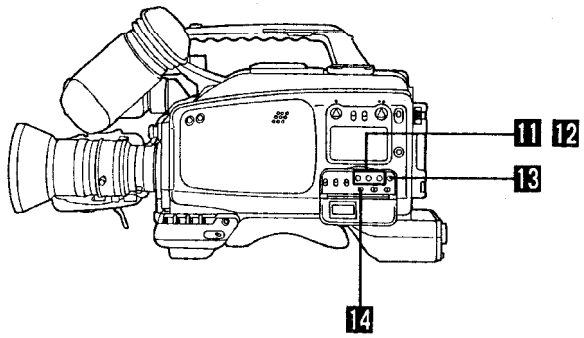

11 Set the date and time using the SHIFT, SET + and SET − buttons.

12 Press the SHIFT button until the arrow at the far left is aligned with "TIME/DATE SET".

```
- TIME/DATE -
01 YEAR          94
02 MONTH         07
03 DAY           06
04 HOUR          16
05 MINUTE        55

→ *TIME/DATE SET
  **PREVIOUS MENU
  ---END OF DATA---
```

13 When the START button is pressed, the data is entered, and the screen display changes to the MAIN MENU.

14 Finally, set the MENU ON/OFF selector switch to OFF.

Using The AU-BP402 Battery Pack

Before using the battery, charge it using the AG-B425 battery charger. It takes about an hour to charge the battery. For further details, refer to the Operating Instructions of the AG-B425 battery charger.

1 Remove the Anton/Bauer battery holder.

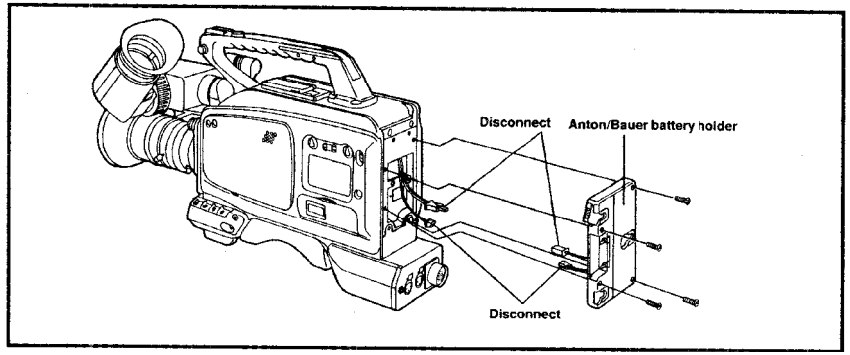

2 Connect the cable from the camera recorder to the cable of the AU-M402 battery case.

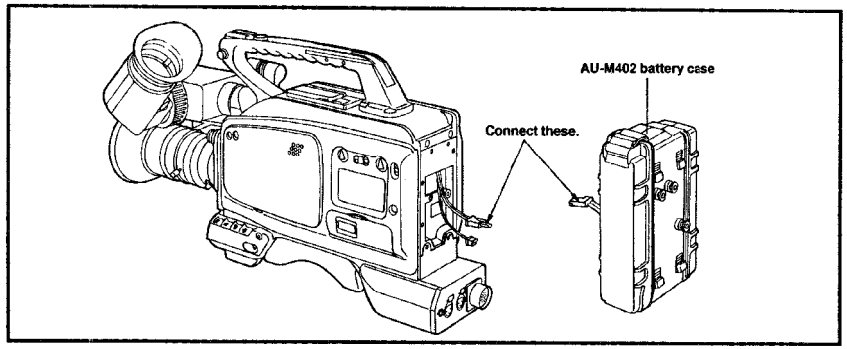

Using the AU-BP402 Battery Pack (Continued)

3 Use a screwdriver to mount the AU-M402 on the camera recorder.

The holes for tightening the screws are visible when the lid is opened and the rubber caps are pulled away. Mount the battery case onto the camera recorder by tightening the screws with a screwdriver. Tighten up the screws as far as they will go.

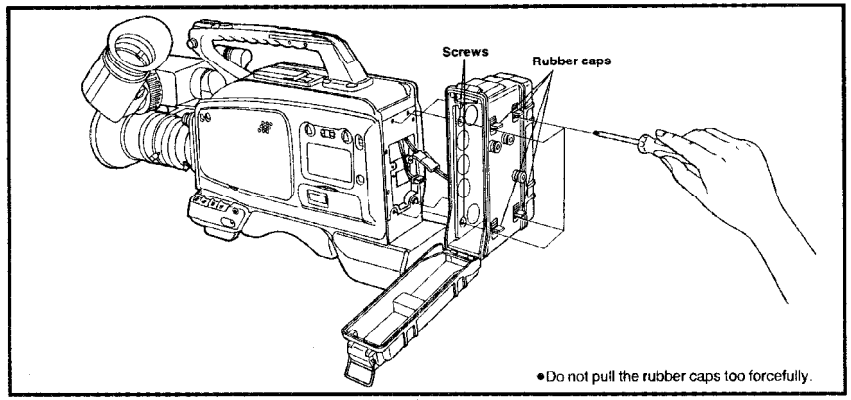

4 Connect the battery pack's plug to the connector inside the battery case, and insert the battery pack into the case.

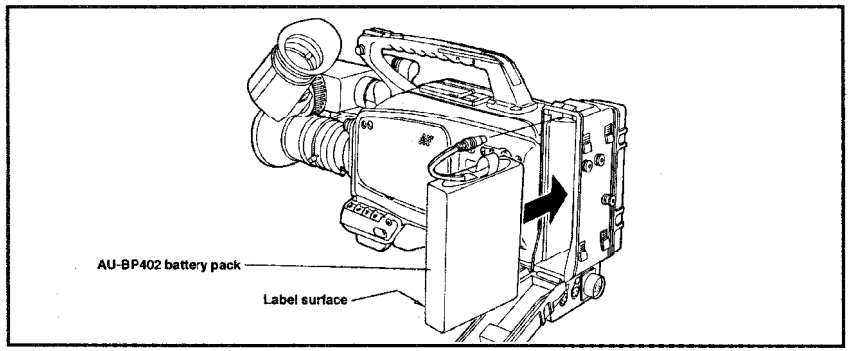

NOTE

Make absolutely sure that the camera recorder's power is off before attempting to connect or disconnect the plug.

5 Set menu item 7 "BATTERY" (battery selection) to "Ni-Cd 12 V".

For further details, refer to "How to set the menu items" (page 52).

Using AC Power (With AU-B110 AC Adaptor)

1 Connect the camera recorder's external DC input socket to the DC OUT connector on the AU-B110 AC adaptor.

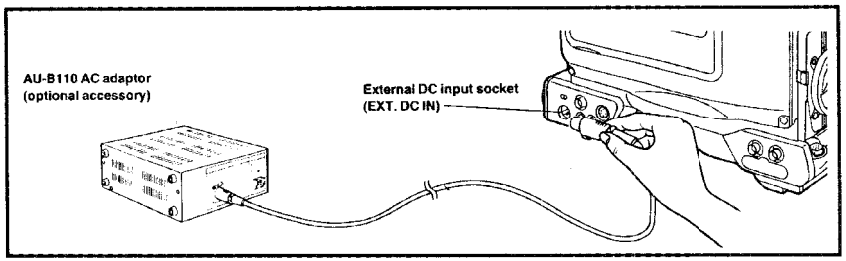

2 Turn on the AC adaptor's power.

3 Set the camera recorder's power switch to ON.

Check the pin signals of the external DC input socket when an external power supply other than the AU-B110 AC adaptor is to be used.

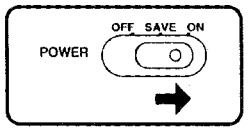

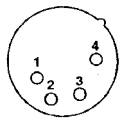

Pin No.	Signal
1	GND
2, 3	—
4	+12 V

NOTES

- When both the battery pack and AC adaptor have been connected, the power from the AC adaptor has priority in terms of which power is supplied to the camera recorder.
- When the AC adaptor is used, the low battery level warning may appear depending on the battery selection menu setting. In a case like this, it is recommended that "Ni-Cd 12 V" be set on the menu as the battery selected.
- When using the AC adaptor, be absolutely sure to turn the unit's POWER switch to ON only after turning on the AC adaptor's power. If this sequence is reversed, the AC adaptor's output voltage will rise slowly with the result that the unit may not operate properly.

Using the Anton/Bauer Battery Pack

Charging the pack

Before using the battery pack, charge it using the battery charger made by Anton/Bauer. For the charging time and other details, refer to the Operating Instructions of the battery charger used.

1 Attach the Anton/Bauer battery pack.

Insert the pack in the direction shown by the arrow, and then slide it into place.

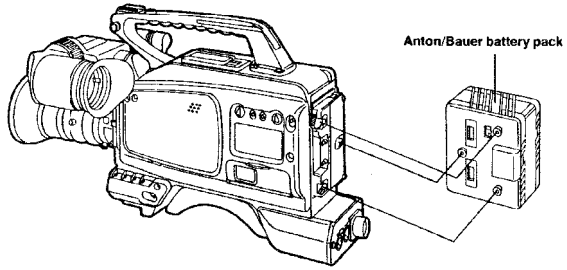

2 Set menu item 7 "BATTERY" (battery selection) to the battery which is going to be used.

For further details, refer to "How to set the menu items" (page 52).

REFERENCE

How to remove the battery pack

Pull the disengaging lever on the battery holder all the way down and, while keeping the lever down, slide the battery pack in the direction shown by the arrow.

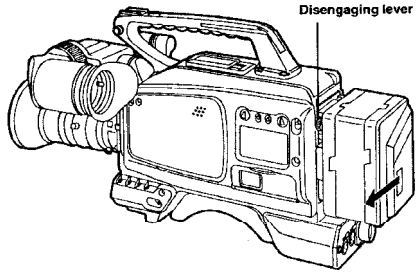

Using Sony's NP-1 battery

Before proceeding to use this battery, charge it using the Sony battery charger which is specially designed for it. Refer to the operating instructions accompanying the battery charger used for details on the charging time, etc.

1 Remove the battery holder made by Anton/Bauer.

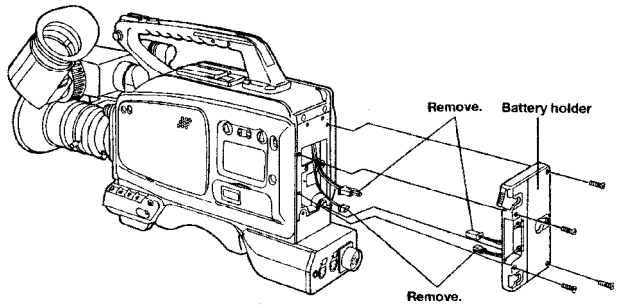

2 Mount the screws for the accessory battery installation terminal (NP-1).

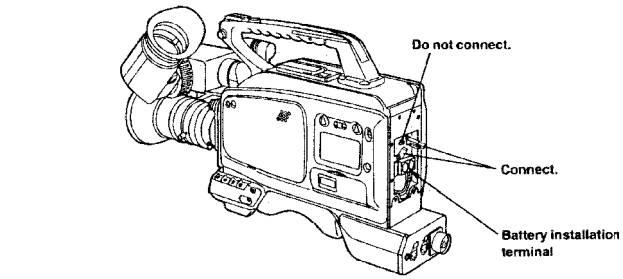

Using Sony's NP-1 battery (Continued)

3 Install the battery holder made by Sony.

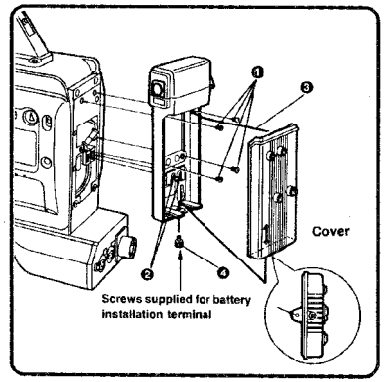

As shown in the figure on the left, first install the battery case whose cover has been removed, and then install the removed cover.

❶ Tighten the installation screws.
❷ Tighten the power supply contact screws.
❸ Insert the top of the removed cover in the direction indicated by the arrow.
❹ Align the holes at the bottom (metal part) of the cover with the holes at the bottom of the case, and attach to the battery installation terminal using the accessory screws.

When supplying power from the 26P VTR connector

1 Connect the unit ot the back-up VTR with the VTR cable.

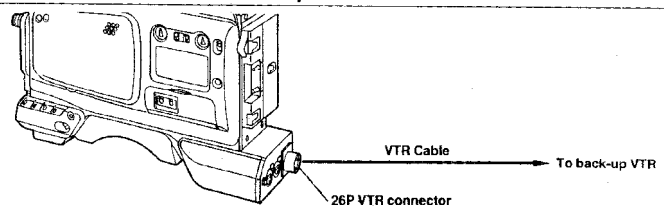

2 Set the power selector switch to VTR. (See page 11.)

NOTES

- When the power selector switch is set to VTR, power is supplied from the VTR cable. The power will not be selected automatically by connecting the power from the AC adaptor to the EXT DC IN connector.
- When suppiying power from the back-up VTR through the VTR cable, bear in mind that the supply voltage may drop. (This unit has an undercutting voltage of 10.5 V.)

Black Balance & White Balance Adjustments

Black Balance Adjustment

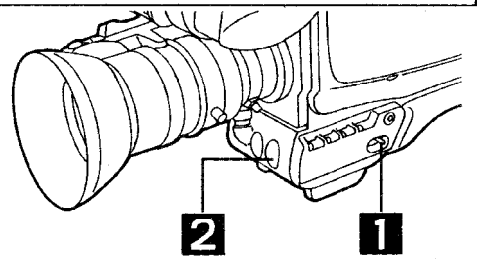

1 Set the POWER switch to the ON position.

2 Press the AUTO W/B BAL switch to the ABB position.

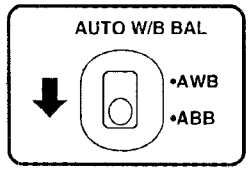

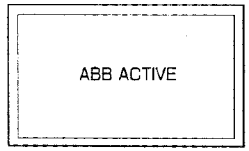

The black balance adjustment is completed in about 20 seconds, and the adjustment value is automatically stored in the memory.

A display similar to the one shown on the left appears on the viewfinder screen while the adjustment is in progress.

- Upon completion of the black balance adjustment, the display changes to "ABB: OK".
- The "ABB: NG" display appears if it was not possible to adjust the black balance.

NOTES

- The camera is automatically shielded from the light while the black balance is being adjusted.
- When the iris is being adjusted manually, return the iris (but only with a lens which is recommended by Panasonic) to a place near its original position after having adjusted the black balance. Start shooting only after the iris has been set to the appropriate value.
- When the AUTO W/B BAL switch is pressed to the ABB position, the gain selection circuit is switched automatically, and flickering appears several times on the screen inside the viewfinder. This is normal and not indicative of a failure.

REFERENCE

- The black balance needs to be adjusted in the following cases only:
  When the camera recorder is to be used for the first time
  When the difference in the temperature has changed greatly
- In the interest of maintaining a high picture quality, it is recommended that the AUTO W/B BAL switch be set to the ABB position immediately before shooting important or memorable scenes.

Black Balance & White Balance Adjustments (Continued)

White Balance Adjustment

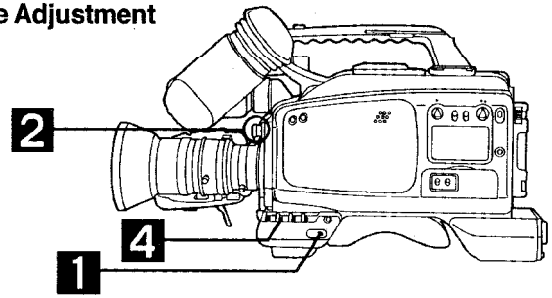

1 Set the POWER switch to the ON position.

2 Use the filter selector control to select the colour temperature according to the lighting conditions.

3 When the lens iris is to be operated manually, set it to the suitable value.

Bear in mind that it may not be possible to adjust the white balance if the iris is not set properly. If the lens comes with an automatic iris adjustment mechanism, set the automatic/manual iris selector switch on the lens to the automatic position.

4 Set the AWB selector switch to A or B.

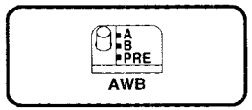

5 Place a white sheet of paper or handkerchief where the conditions are the same as for the light source illuminating the subject, zoom in and shoot the white on the screen.

A white object (sheet, cloth or wall, etc.) near the subject can be used instead but bear in mind that the object appearing to be white may not be perfectly white.

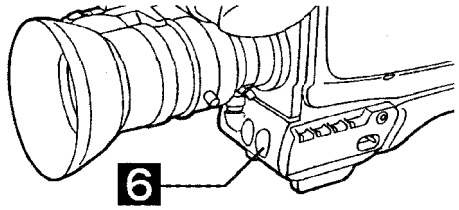

6 Shoot a white object so that it is virtually at the center of the screen and occupies an area equivalent to at least one-fourth of the height and width of the screen, and set the AUTO W/B BAL switch to AWB.

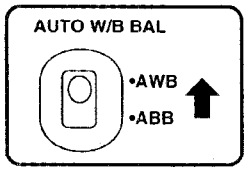

The white balance adjustment is completed in about a second. The adjustment value is stored in memory A or B.

The display shown on the left appears on the viewfinder screen while the adjustment is in progress.

- Upon completion of the white balance adjustment, the display changes to "AWB: OK".
- The "AWB: NG" display appears if it was not possible to adjust the white balance.

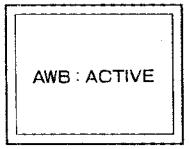

NOTES

- Since hunting may occur when a zoom lens equipped with an automatic iris adjustment mechanism is used, adjust the iris gain control provided on the lens.
  For further details, refer to the Operating Instructions of the lens.
- The white balance cannot be adjusted if the AWB selector switch is set to PRE.
  The switch has been adjusted in such a way that the white balance is achieved at 3200 K. When the filter selector control is set to "1", the proper white balance at 3200 K is achieved. All that now needs to be done is adjust the black balance.
- Since the lightest part of what appears on the screen is taken to be "white" for the adjustment of the white balance, do not allow any object lighter than the white object shot in step 6 above to appear on the screen. Incorrect operation may otherwise result.
- Do not adjust the auto white balance (AWB) with the gain turned higher than is necessary.
  Doing so will cause the iris to virtually close during AWB, resulting in unstable operation.

REFERENCE

- In the interest of maintaining a high picture quality, it is recommended that the AUTO W/B BAL switch be set to the AWB position immediately before shooting important or memorable scenes.
- It is recommended that the auto white balance be adjusted when the gain or shutter speed has been changed.

Normal Recording

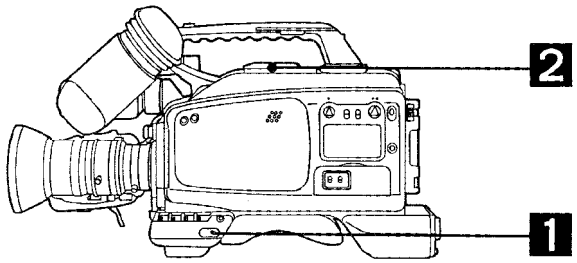

1 **Set the POWER switch to the ON position.**

2 **Press the EJECT button to open the cassette compartment.**

3 **Insert the cassette tape.**

- Before inserting the tape, make sure that the accidental erasure prevention tab on the cassette has not been broken out.
- Do not use a 240-minute tape.

4 **Set the camera's switches as follows.**

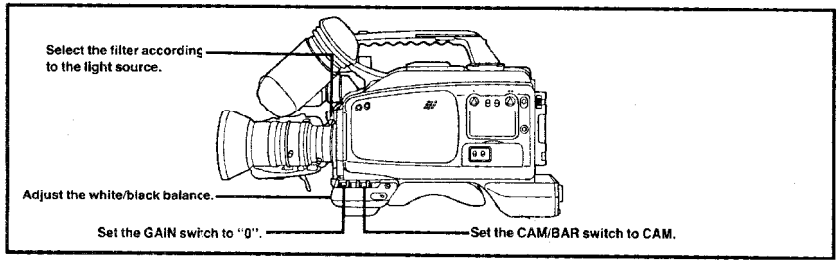

5 **Point the camera at the subject, and adjust the focus and zoom.**

6 **Press the VTR START/STOP button to start the recording.**

The REC tally lamp inside the viewfinder keeps on flashing until the recording mode is established. Once recording commences, it stops flashing and remains lighted.

7 **Press the VTR START/STOP button to suspend the recording.**

When the recording is suspended as shown in the figure below, the tape is rewound by about 25 frames and the rec pause mode is established. When the recording is resumed, recording commences where the previous recording will be slightly overlapped.

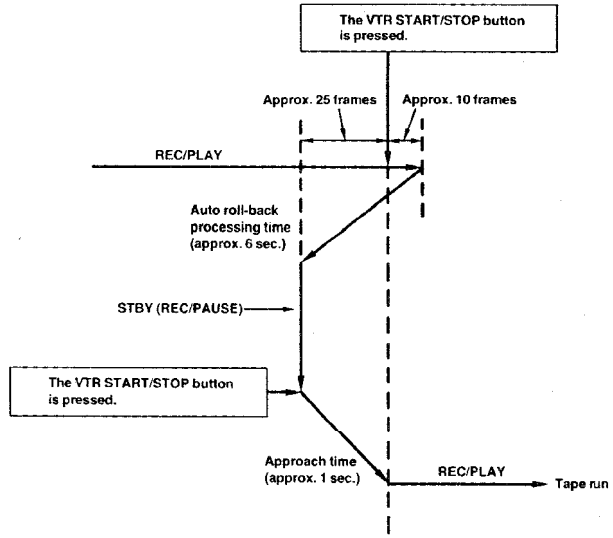

NOTE

This unit does not have a function which ensures that the REC/PAUSE mode will be released after a certain period of time has elapsed. This means that when it is kept in the REC/PAUSE mode for an extremely long period of time, the tape may be adversely affected. As a general rule, take steps to change the operating mode every hour or so.

Simple Editing

Simple editing function

This refers to the pre-edited shooting function with which the recording of each cut is started from the pause (still picture) mode to ensure continuity.

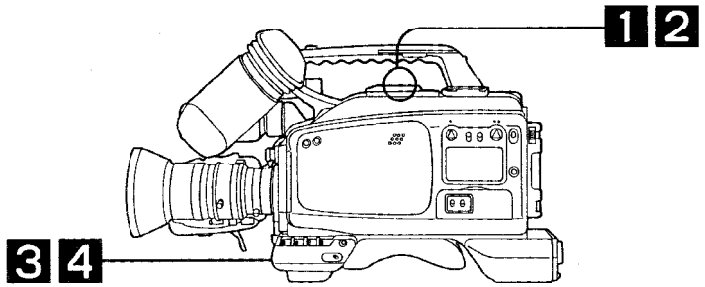

Operation

1 **Press the PLAY button.**

The playback picture mode is established.

2 **Press the PLAY button again where the new cut is to be joined onto the existing recording.**

The still picture mode is established.

3 **Press the VTR START/STOP button.**

The rec pause mode is established.

4 **To start the recording, press the VTR START/STOP button again.**

Recording now starts.

NOTE

If the VTR is kept in the still picture mode for about 5 minutes, it is automatically placed in the stop mode. Bear in mind that smooth continuity between cuts cannot be guaranteed when recording is started from the stop mode.

Audio Recording

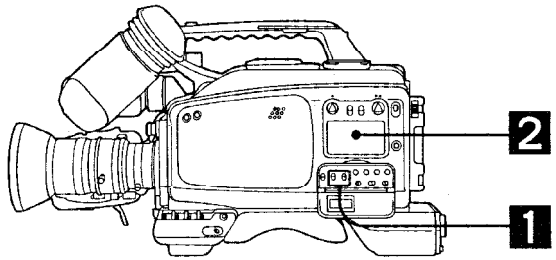

1 **Select the desired input signals using the audio input selector switches.**

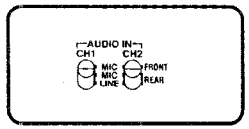

The same sound is input for normal audio anc Hi-Fi audio.

When the built-in microphone is used	→ FRONT MIC
When an external microphone is used	→ REAR MIC
When line audio signals are input	→ REAR LINE

2 **Turn the audio level controls clockwise or counterclockwise and adjust them so that the audio signal levels indicated on the display's level meter are brought to the standard positions.**

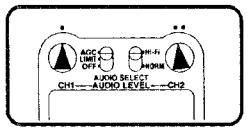

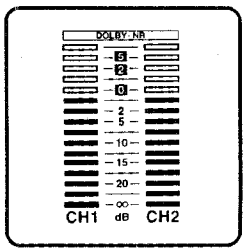

- The audio signal levels can be adjusted when the AUDIO AGC switch is OFF. If this switch is ON, the signals will be automatically adjusted to more or less the appropriate levels regardless of the audio level control settings.
- Howling may occur if the volume of the audio monitor speaker is turned up high. If this occurs, turn the audio monitor level control and lower the volume to a level at which howling does not occur.
  - When the AUDIO AGC switch is at LIMIT, the limiter will be automatically activated when the input level of the signals is excessively high. Therefore, first adjust the level with the switch at OFF and then return the switch to LIMIT just in case excessively high input signals are supplied.

Power Save Mode

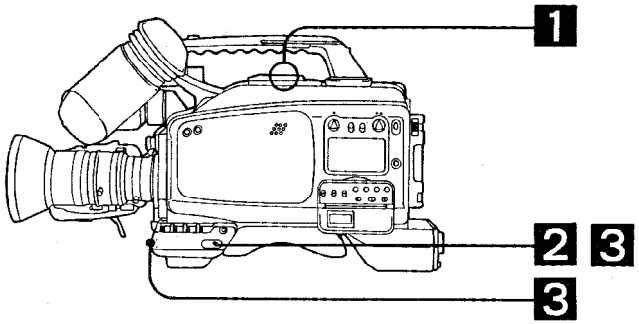

When the camera's DC POWER switch is set to SAVE, the VTR is set to the power save mode.

1 **Set the VTR to the stop, eject or rec pause mode.**

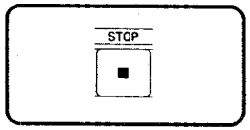

2 **Set the POWER switch to SAVE.**

The VTR is now set to the power save mode. In this mode, the drum stops rotating, the tape stops where it has wound around the drum. The backlight for the display's counter is also turned off, and only the picture on the screen remains.

3 **To resume recording, set the POWER switch to ON, and after waiting for about 5 seconds, press the camera's VTR START/STOP button.**

NOTE

Until the drum rotation has stabilized (which takes about 5 seconds), recording will not commence even when the camera's DC POWER switch has been set to ON.

Reference

The VTR can be started in the power save mode but it takes a little more time for recording to commence.

Rec Review

When the camera's RET button is pressed with the VTR in the rec pause mode (which is established after the tape has finished automatically reversing), the rec review operation is performed, enabling what has already been recorded to be checked.

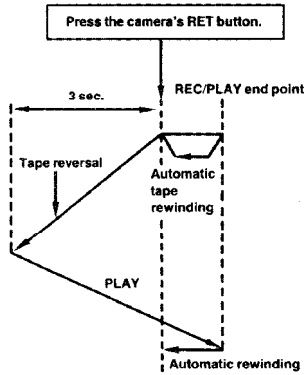

The playback pictures are shown in the viewfinder while the tape is playing back in the rec review mode.

<When the area near the rec review start point has not been recorded>
The playback pictures of the unrecorded part of the tape are shown in the viewfinder.

NOTE

The rec review operation is not repeated even when the rec RET button remains depressed.

Playback

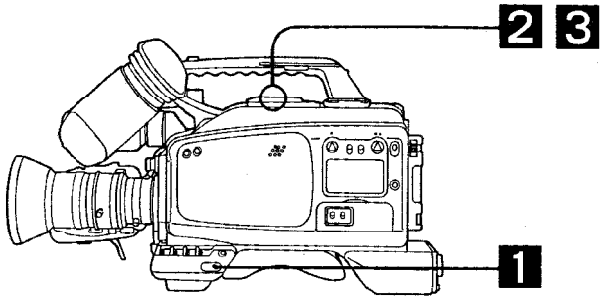

1 Set the POWER switch to the ON position.

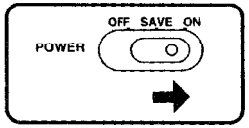

The tape is automatically loaded onto the cylinder, the REC, PLAY and PAUSE lamps come on, and the camera recorder is set to the recording pause mode.

2 Press the STOP button.

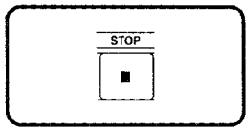

During rec/play, the VTR will not be set to the stop mode even when the STOP button is pressed. Press the VTR START/STOP button first to suspend the recording and then press the STOP button.

3 Press the PLAY button.

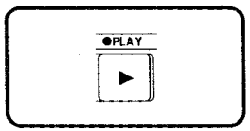

Noise will appear for an instant on the playback picture when the mode is transferred from STOP to PLAY. This is normal and not indicative of malfunctioning.

4 The playback pictures appear on the viewfinder and on a TV monitor which has been connected to the camera recorder.

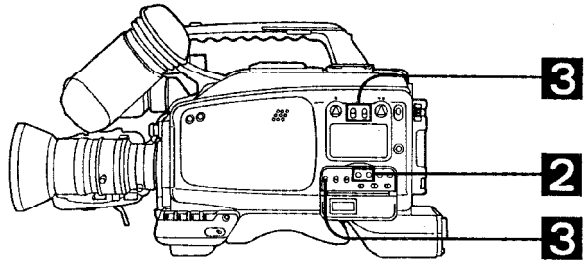

1 Automatic S-VHS/VHS identification and playback

This camera recorder's playback circuitry is designed to identify the cassette's recording system automatically.

Recording system	S-VHS display
S-VHS	On
VHS	Off

2 Tracking

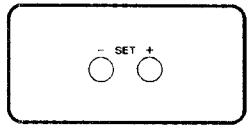

If noise should appear during playback, adjust the SET + and SET – buttons until the picture is restored to normal.

- It may not be possible to eliminate the noise adequately on a tape which was recorded on another VTR.
- The tracking adjustment remains effective until the tape is ejected. (When the tape is ejected, the tracking value which was set before the camera recorder was shipped from the manufacturing plant is restored.)
- The tracking value which was set before the camera recorder was shipped from the manufacturing plant can be restored by pressing the SET + and SET – buttons simultaneously.

3 AUDIO SELECT switch

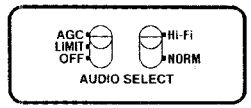

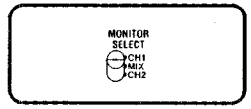

This switch can be used to select normal audio or Hi-Fi audio for the audio output signals.
The sound heard through the monitor speaker can be set to CH1, MIX or CH2 by the audio monitor selector switch.

Playback (Continued)

4 Cue and Review Playback

1 When the FF button is kept depressed during tape play, the tape is cued at approximately 5 times the normal tape speed.

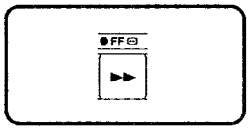

- The tape is played back at 1× normal speed during still picture playback.

2 When the REW button is kept depressed during tape play, the tape is reviewed at approximately 5 times the normal tape speed.

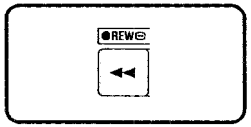

- The tape is played back at 1× normal speed in the reverse direction during still picture playback.
- The noise as shown in Fig. 1 or Fig. 2 appears during cue or review playback.
- The image may appear as shown in Fig. 3 or its top part may appear distorted: this is normal and not indicative of a failure.

Noise appearing during cue

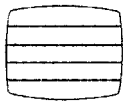

Fig. 1

Noise appearing during review

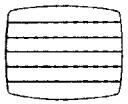

Fig. 2

Fig. 3

- If the image slips vertically up or down the screen, adjust the TV's horizontal hold.
- Alternatively, the colors may keeping disappearing and reappearing: this is normal and not indicative of a failure.

5 Still picture playback

A still picture appears when the PLAY button is pressed during playback.

- Noise may appear on the screen during still picture playback: this is normal and not indicative of a failure.
- Still picture playback cannot be continued for more than 5 minutes. The unit will be placed automatically in the STOP mode after 5 minutes of still picture mode in order to protect the tape and VTR.

Monitoring

Connect the units as shown in the figure below to monitor the picture and sound.
- E-E images can be monitored during recording.

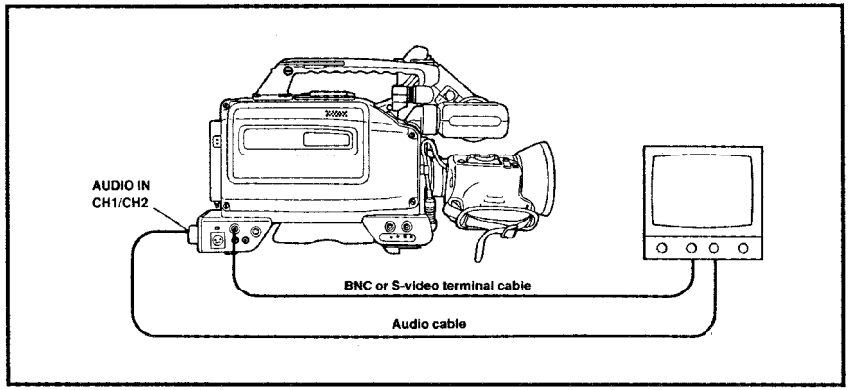

The sound can also be monitored through the built-in speaker.

NOTE

Use the VIDEO OUT connector on the camera to monitor the camera's E-E images during playback.

Time Code Generator Settings

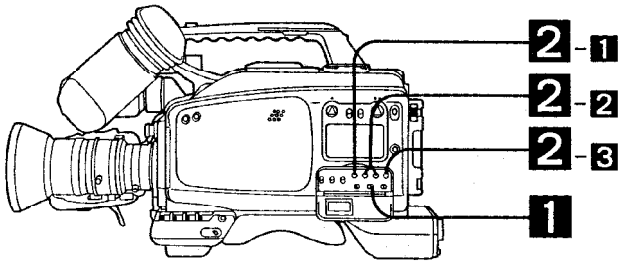

1 Set the TC/UB/COUNTER selector switch to TC or UB.

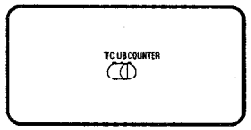

- When the switch is set to TC, the time code data will be set.
- When the switch is set to UB, the user bit data will be set.

2 Set the data.

1 Press the SHIFT button.

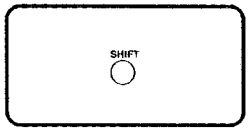

2 To change the flashing number, press the SET + or SET – button.

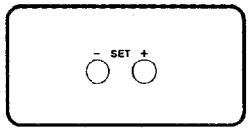

If the RESET button is pressed at this stage, the data is cleared to zero and the setting mode is released.

3 After the data has been set, press the START button.

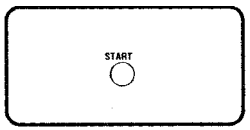

The data will not be set if the TC/UB/COUNTER selector switch is now set to a different position without the START button having first been pressed.

REFERENCE

•REC RUN and FREE RUN positions of REC/FREE selector switch

REC RUN: The time code is counted only when the VTR is in the recording mode. The count commences at the same time as the recording starts, and it stops at the same time as the recording ends. The time code is continuous for automatic editing (pre-edit shooting) if LTC is ON (refer to the section on the menu items).

FREE RUN: The time code is counted continuously all the time regardless of the VTR's operation mode. When the generator is synchronized with a standard clock (refer to the section on the menu items), the recording time can be recorded onto the tape.

How to Set the Menu Items

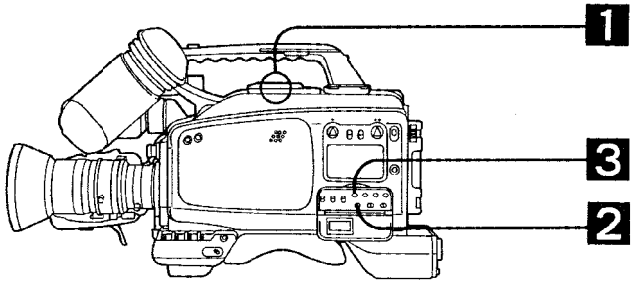

1 Set the camera recorder to the eject, rec pause or stop mode.

2 Set the MENU ON/OFF selector switch to ON.

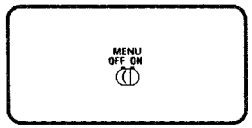

The main menu screen appears on the viewfinder.

Viewfinder

```
-MAIN MENU-
→01 EVF DISPLAY
  02 CAMERA SETTING
  03 VTR OPERATION
  04 TIME/DATE
  05 TIME CODE
  06 AUDIO
  07 BATTERY
  08 DIAGNOSIS
  09 MENU INITIALIZATION
 ···· END OF DATA ····
```

3 Press the SHIFT button to select the desired menu item.

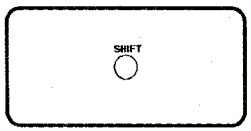

The cursor on the left of the main menu moves down the menu.

Viewfinder

```
-MAIN MENU-
  01 EVF DISPLAY
→02 CAMERA SETTING
  03 VTR OPERATION
  04 TIME/DATE
  05 TIME CODE
  06 AUDIO
  07 BATTERY
  08 DIAGNOSIS
  09 MENU INITIALIZATION
 ···· END OF DATA ····
```


4 Press the START button.

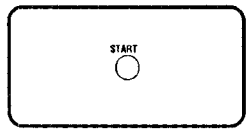

The main menu screen is replaced by the sub menu screen.

Viewfinder

```
-EVF DISPLAY-

→01 LEVEL METER          ON
  02 F NUMBER            ON
  03 BATTERY VOLTAGE     ON
  04 VTR STATUS          OFF
  05 TIME DATA           BAR
  06 SAFETY ZONE         ON

 ····END OF DATA····
```

5 Press the SHIFT button to select a sub menu item.

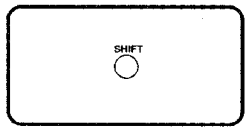

The cursor on the left of the sub menu moves down the menu.

Viewfinder

```
-EVF DISPLAY-

→01 LEVEL METER          ON
  02 F NUMBER            ON
  03 BATTERY VOLTAGE     ON
  04 VTR STATUS          OFF
  05 TIME DATA           BAR
  06 SAFETY ZONE         ON

 ····END OF DATA····
```

6 Press the SET + or SET – button to change the data setting.

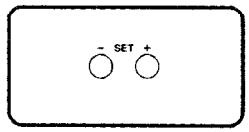

The setting of the sub menu item with the cursor is changed.

Viewfinder

```
-EVF DISPLAY-

  01 LEVEL METER          ON
→02 F NUMBER             OFF
  03 BATTERY VOLTAGE     ON
  04 VTR STATUS          OFF
  05 TIME DATA           BAR
  06 SAFETY ZONE         ON

 ····END OF DATA····
```

How to Set the Menu Items (Continued)

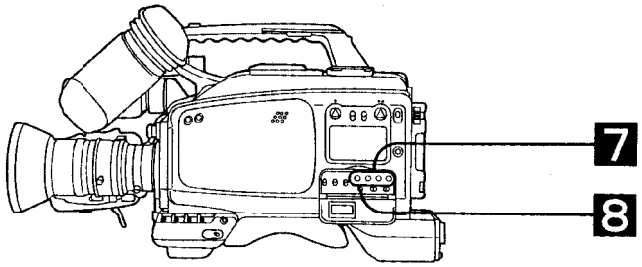

7 **To return to the main menu and perform settings on another menu item, press the SHIFT button to move the cursor (arrow) to the previous menu, and press the START button.**

8 **To exit from the menu settings, set the MENU ON/OFF selector switch to OFF.**

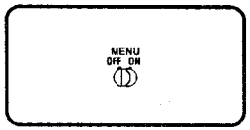

NOTE

When the camera's START/STOP button is pressed at any time while menu settings are performed, the menu setting process is suspended and recording is commenced. (In this case, scenes may be recorded without the menu settings having been performed properly.)

Menu Items

MAIN MENU

Viewfinder main menu item	Functions
EVF DISPLAY	EVF display ON/OFF setting
CAMERA SETTING	Camera settings
VTR OPERATION	VTR operation-related setting
TIME/DATE	Date/time settings
TIME CODE	Time code-related settings
AUDIO	Audio control items
BATTERY	Battery selection
DIAGNOSIS	Self-diagnosis items and initialization after replacement of back-up battery
MENU INITIALIZATION	Return to factory default menu settings

Display on EVF or at LINE OUT connector of VTR

```
- MAIN MENU -
→01 EVF DISPLAY
  02 CAMERA SETTING
  03 VTR OPERATION
  04 TIME/DATE
  05 TIME CODE
  06 AUDIO
  07 BATTERY
  08 DIAGNOSIS
  09 MENU INITIALIZATION
 ----END OF DATA----
```

Menu Items (Continued)

EVF DISPLAY Menu

Underlining denotes the mode set as the default.

Viewfinder sub menu item	Mode set	Functions
LEVEL METER	ON OFF	Sets audio level meter display on EVF ON or OFF. ON: Display is ON. OFF: Display is OFF.
F NUMBER	ON OFF	Sets f (iris f) number display on EVF ON or OFF. ON: Display is ON. OFF: Display is OFF.
BATTERY VOLTAGE	ON OFF	Sets battery voltage display on EVF ON or OFF. ON: Display is ON. OFF: Display is OFF.
VTR STATUS	ON OFF	Sets VTR status display on EVF ON or OFF. ON: Display is ON. OFF: Display is OFF.
TIME DATE	ON BAR OFF	Sets date and time display on EVF ON or OFF. ON: Display appears all the time. BAR: Display is ON only with OFF color bar signals. OFF: Display is OFF.
SAFETY ZONE	ON OFF	Sets safety zone display on EVF ON or OFF ON: Display is ON. OFF: Display is OFF.

Example of display on EVF or at LINE OUT connector of VTR

```
        - EVF DISPLAY -

  01 LEVEL METER          ON
  02 F NUMBER             ON
 →03 BATTERY VOLTAGE      ON
  04 VTR STATUS           OFF
  05 TIME/DATE            BAR
  06 SAFETY ZONE          ON

  ** PREVIOUS MENU

  ----END OF DATA----
```

NOTE

Even when the mode is set to ON on the EVF DISPLAY menu, no characters will appear if the CHARACTER ON/OFF switch on the front panel of the viewfinder has been set to the OFF position.

CAMERA SETTING Menu

Underlining denotes the mode set as the default.

Viewfinder sub menu item	Mode set	Functions
GAIN	9 dB 18 dB 24 dB SUPER HIGH	Sets gain value when GAIN selector (toggle) switch at front of camera recorder has been set to HIGH.
ALC SENSE	CENTER NORMAL	Selects ALC (auto lens iris control) light level metering system. CENTER: Screen center priority light level metering. NORMAL: Uniform light level metering over virtually the entire screen.
PEDESTAL SET	No display UP DOWN PRESET	Adjusts pedestal. (Refer to the procedure for the PEDESTAL SET operation on the next page.) No display: No change in pedestal. UP: Raises pedestal level. DOWN: Lowers pedestal level. PRESET: Returns the pedestal level to its default setting.
VERTICAL FINE	OFF ON	OFF: Normal mode ON: The resolution in the perpendicular direction is improved but lag and moire increase.
SCENE FILE A SET		Sets scene file A (*1).
SCENE FILE B SET		Sets scene file B (*1).

(*1) There are 7 scene files but only files A and B are available for the user to set.

Example of display on EVF or at LINE OUT connector of VTR

```
      - CAMERA SETTING -

  01 GAIN                  9dB
  02 ALC SENSE          CENTER
 →03 PEDESTAL SET          UP
  04 VERTICAL FINE         OFF
  05 SCENE FILE A SET
  06 SCENE FILE B SET

  ** PREVIOUS MENU

  ----END OF DATA----
```

Menu Items (Continued)

PEDESTAL SET operation method

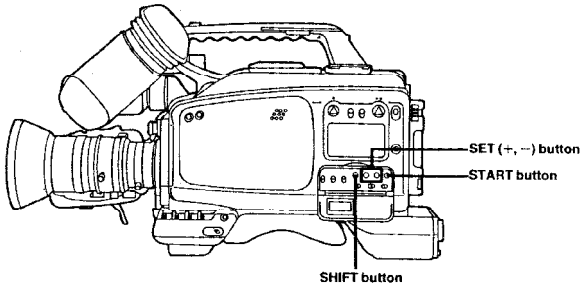

1 **Align the arrow with the "03 PEDESTAL SET" position.**

2 **Press the SET + or SET – button to align the position.**
- While the SET + button is kept depressed, the UP display appears and the pedestal level is increased.
- While the SET – button is kept depressed, the DOWN display appears and the pedestal level is reduced.
- When the SET + and SET – buttons are pressed together, the PRESET display appears, and the pedestal level is returned to its default setting.

Scene file settings

```
   MAIN MENU
 01 EVF DISPLAY
→02 CAMERA SETTING
 03 VTR OPERATION
 04 TIME/DATE
 05 TIME CODE
 06 AUDIO
 07 BATTERY
 08 DIAGNOSIS
 09 MENU INITIALIZATION
 ---END OF DATA---
```

→

```
  – CAMERA SETTING –
 01 GAIN              9dB
 02 ALC SENSE      CENTER
 03 PEDESTAL           UP
 04 VERTICAL FINE     OFF
→05 SCENE FILE A SET
 06 SCENE FILE B SET

 **PREVIOUS MENU
 ---END OF DATA---
```

1 **Press the SHIFT button on the MAIN MENU screen, and press the START button when the arrow at the far left is aligned with "02 CAMERA SETTING". The CAMERA SETTING screen now appears.**

2 **Press the SHIFT button in the same way, and press the START button when the arrow is aligned with "05 SCENE FILE A SET" or "06 SCENE FILE B SET". Page 1 of the scene file setting screen now appears.**
- Before proceeding with the scene file settings, use the SCENE FILE switch to set SCENE FILE A or B.

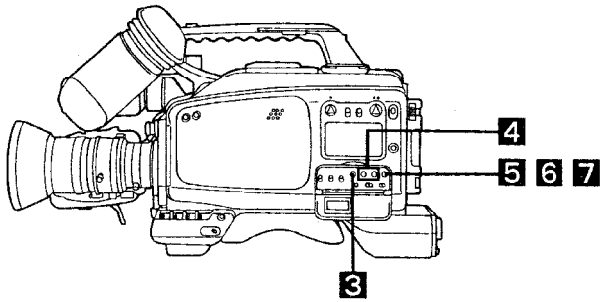

3 **Press the SHIFT button to align the arrow on the far left with the item to be set.**

```
 – SCENE FILE A –PAGE 1
 01 H DTL              10
 02 H DTL FREQ          1
 03 V DTL A             0
→04 LEVEL DEP 1        31
 05 DARK DTL           ON
 06 CORING             10
 07 CHROMA DTL         16

 **PREVIOUS MENU
  PAGE 2:PUSH START
```

→

```
 – SCENE FILE B –  PAGE 2
 08 C GAIN 1         –128
 09 C GAIN 2            0
 10 C PHASE 1        +127
 11 C PHASE 2         +10


→ •DATA SAVE
 **PREVIOUS MENU
  PAGE 1:PUSH START
```

4 **Press the SET + or SET – button to change the data to be set.**
- Pressing the SET + button increases the data setting.
- Pressing the SET – button decreases the data setting.
- Keeping either button depressed enables the data to be changed continuously.

5 **When the START button is pressed, page 2 of the scene file setting screen appears.**
The data settings can be changed in the same way as for page 1.

6 **Data back-up**
- Align the arrow with DATA SAVE, and press the START button.
- When this step is not performed, the data settings are valid only while the power is supplied. Once the power has been turned off, the settings will be lost and the past data will be restored.

7 **When the START button is pressed, page 1 of the scene file setting screen appears.**

Menu Items (Continued)

Scene File Menu

Viewfinder sub menu item	Mode set	Functions
H DTL	Variable range: 0 to 31 Default setting: 14	Enhances the detail (horizontal). 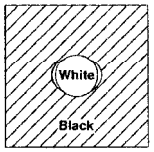 The detail (horizontal) is enhanced when the value is raised.
H DTL FRQ	Variable range: 1 to 4 Default setting: 2	Varies width of detail enhanced (horizontal). 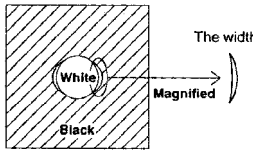 The width becomes less when the value is raised.
V DTL	Variable range: 0 to 31 Default setting: 8	Enhances the detail (vertical). 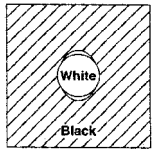 The detail (vertical) is enhanced when the value is raised.
LEVEL DEP	Variable range: 0 to 31 Default setting: 4	Since noise becomes more pronounced (particularly in the dark areas), when the detail enhancement is increased by H DTL and V DTL, LEVEL DEP can be used to reduce the detail enhancement in the dark areas. This effect increases in proportion as the LEVEL DEP value is raised, and the noise in the dark areas is reduced even with high settings for H DTL and V DTL. However, when this value is set too high, even the critical detail components will be lost, and the images will become flat.

Scene File Menu

Underlining denotes the mode set as the default.

Viewfinder sub menu item	Mode set	Functions
DARK TL	ON <u>OFF</u>	Contrary to LEVEL DEP, this increases the horizontal and vertical detail in the dark areas. This can provide radiant and visually pleasing images even in the dark areas, but bear in mind that noise will increase when it set too high.
CORING	Variable range: 0 to 31 Default setting: 1	This cancels the detail enhancement for those detail components which have been set to a relatively low level by H DTL and V DTL. When its value is raised, this effect is enhanced and noise is reduced but when it is set too high, the radiance will be lost in the details, and the images will lack expressiveness.
CHROMA DTL	Variable range: 0 to 15 Default setting: 0	This is also known as high-chroma aperture. It enhances the detail of intensely coloured parts of the image, such as rose petals. It has the effect of making the petals more distinct but bear in mind that the images will appear unnatural when it is set too high.
C GAIN 1	Variable range: −128~+127 Default setting: +88	These are used for colour correction adjustments. •C Gain 1: This increases or reduces the colour in the R-Y axis direction. •C Gain 2: This increases or reduces the colour in the B-Y axis direction. •C Phase 1: This changes the colour phase parallel to the R-Y axis. •C Phase 2: This changes the colour phase parallel to the B-Y axis. Figs. 1 to 8 on the following pages show the changes in the colour bars on a vectorscope when each of the parameters has been varied. These figures show examples of adjustment options in terms of colour bars whereas in actual fact the colour correction applies only to the camera images, and the colour bar signals remain unchanged.
C GAIN 2	Variable range: −128~+127 Default setting: +112	
C PHASE 1	Variable range: −128~+127 Default setting: −14	
C PHASE 2	Variable range: −128~+127 Default setting: −38	
DATA SAVE		This is selected in order to save the selected settings in the camera's EEPROM. •When this operation is performed, the data settings are backed up. •When this operation is not performed, the settings which have been selected are valid for camera recorder operation while the unit's power is supplied but they will be lost once its power is turned off.

Menu Items (Continued)

Scene File Menu

•C Gain 1 (changes in colour bars on vectorscope)

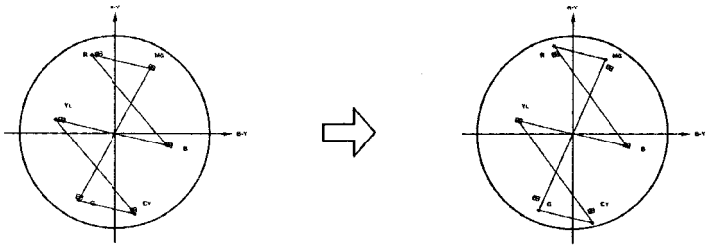

Fig. 1

Colour level is increased or reduced in R-Y axis direction.

Fig. 2

•C Gain 2 (changes in colour bars on vectorscope)

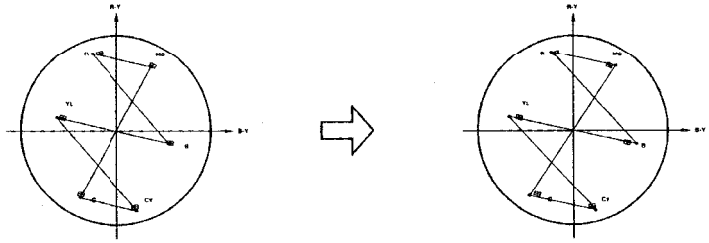

Fig. 3

Colour level is increased or reduced in B-Y axis direction.

Fig. 4

Scene File Menu

•C Phase 1 (changes in colour bars on vectorscope)

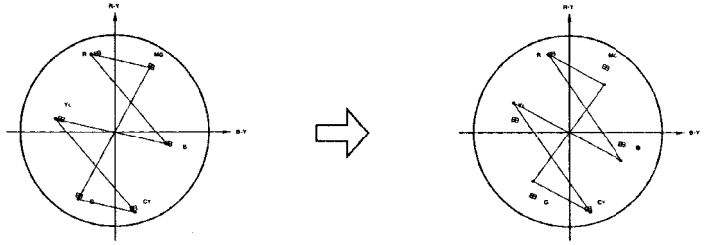

Fig. 5

Phase changes in R-Y axis direction.

Fig. 6

•C Phase 2 (changes in colour bars on vectorscope)

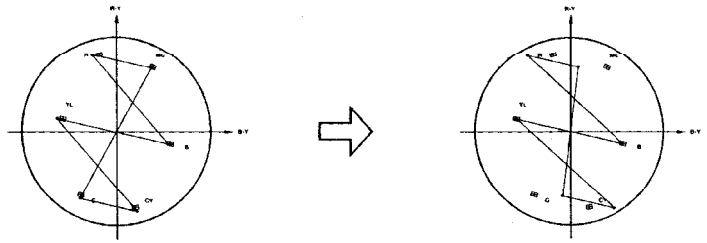

Fig. 7

Phase changes in B-Y axis direction.

Fig. 8

Menu Items (Continued)

VTR OPERATION Menu

Underlining denotes the mode set as the default.

Viewfinder sub menu item	Mode set	Functions
BACK SPACE (pre-edit shooting)	ON / OFF	Selects whether auto editing is to be performed. ON: Auto editing is performed. OFF: Auto editing is not performed.
CUE-UP (programme search)	ON / OFF	Selects whether auto cue-up is to be performed. ON: Auto cue-up is performed. OFF: Auto cue-up is not performed.
HUMID OPE (recording condensation)	DISABLE / ENABLE	Selects the VTR operation when condensation has formed. DISABLE: When condensation has formed, all operations except Power switch ON/OFF and tape ejection are prohibited to protect the VTR and its tape. ENABLE: Even when condensation has formed, operations are accepted as usual.
S-VHS REC	AUTO / VHS	AUTO: Tape format is automatically identified, and recording is performed in Super VHS mode when S-VHS tape is employed. VHS: Recording is forcibly performed in VHS mode.
26P CONTROL	OFF / BOTH / ON	OFF: No 26P VTR control. (Camera recorder only) BOTH: This unit and the 26P VTR are controlled at the same time (tally LED displays REC mode of camera recorder). ON: Only the VTR is controlled (tally LED displays REC mode of 26P VTR). To place camera recorder in REC or REC PAUSE mode, press START/STOP button while holding down RESET button.
5P REMOTE	ON / OFF	Sets 5P remote control ON or OFF. ON: 5P remote control possible. OFF: 5P remote control not possible. **Note:** "5P REMOTE" refers to signals which will be used at some future point in time.
BACK TALLY	ON / OFF	Selects whether back tally indicator (LED) is to light. ON: Indicator lights. OFF: Indicator does not light.
REC START	ALL / NORMAL	ALL: Accepts recording regardless of the VTR mode. NORMAL: The operation of the VTR START/STOP button is accepted only when the VTR is in the stop (power save), rec pause or still mode.

NOTE

"HUMID OPE ENABLE" is an extremely risky mode to set in that in this mode VTR operation is continued even if the condensation sensor detects the formation of condensation inside the unit. Since in such a state the tape may wind itself around some of the parts inside the VTR, this mode should be used only when recording is worth the risk. (The manufacturer will not be held liable for any damage which may result from operation in this mode.)

VTR OPERATION Menu

Cue-up operation

Once the tape has been loaded, the cue-up operation search the end point of a previous recorded portion. It causes the tape to travel in the reverse direction at 1× normal tape speed while checking whether CTL pulses are present (whether the tape has been recorded). If CTL pulses are found, that point is determined to be the end point of the previous recording, and if AUTO BACK SPACE is ON, the tape is automatically reversed (auto back operation) and placed in the REC/PAUSE mode. This means that if CTL pulses have been found as soon as the tape is made to travel in the reverse direction at 1× normal tape speed, that point will be determined to be the end point of the previous recording. The maximum time during which the tape is allowed to travel in the reverse direction at 1× normal tape speed is 5 seconds. If no CTL pulse have been found after 5 seconds, the search operation is suspended, and the REC/PAUSE mode is established. Therefore, when more accurate search is required, the unit should be operated using the simple editing function (see p. 42).

Menu Items (Continued)

Example of display on EVF or at LINE OUT connector of VTR

```
- VTR OPERATION -
 01 BACK SPACE          ON
 02 CUE-UP              OFF
→03 HUMID OPE           OFF
 04 S-VHS REC           AUTO
 05 26P CONTROL         OFF
 06 5P REMOTE           OFF
 07 BACK TALLY          ON
 08 REC START           NORMAL
 ** PREVIOUS MENU
 - - - - END OF DATA - - - -
```

TIME/DATE Menu

Underlining denotes the mode set as the default.

Viewfinder sub menu item	Mode set	Functions
YEAR	Setting: 00–99	Sets the "year" of the date.
MONTH	Setting: 01–12	Sets the "month" of the date.
DAY	Setting: 01–31	Sets the "day" of the date.
HOUR	Setting: 00–24	Sets the "hours" of the time. (24-hour system)
MINUTE	Setting: 00–59	Sets the "minutes" of the time.

Example of display on EVF or at LINE OUT connector of VTR

```
- TIME DATE -
 01 YEAR DATE           93
 02 MONTH               06
→03 DAY                 08
 04 HOUR                16
 05 MINUTE              55
  * TIME/DATE SET
 ** PREVIOUS MENU
 - - - - END OF DATA - - - -
```

1 Setting method

1 Press the SHIFT button to align the arrow with the menu item to be set.

2 Change the data using the SET + and SET − buttons.
Keeping either button depressed changes the data continuously.

3 To set the clock:
1) Press the SHIFT button to align the arrow with TIME/DATE SET.
2) Press the START button. The clock is now set and the menu screen returns to the MAIN MENU.

4 When the clock is not to be set:
Select PREVIOUS MENU to return to the MAIN MENU or set the MENU ON/OFF switch to OFF to release the menu setting mode.

TIME CODE Menu

Underlining denotes the mode set as the default.

Viewfinder sub menu item	Mode set	Functions
VITC POSITION (1)	7H 8H 9H 10H 11H 12H 13H 14H 15H 16H 17H 18H 19H 20H 21H	Sets line (7–21) in which VITC signal is to be inserted.
VITC POSITION (2)	7H 8H 9H 10H 11H 12H 13H 14H 15H 16H 17H 18H 19H 20H 21H	Sets line (7–21) in which VITC signal is to be inserted. *The same line as that set for VITC POSITION (1) cannot be selected.
LTC REC	ON OFF	Sets whether LTC signal is to be recorded on audio linear track (CH2). ON: LTC signal is recorded. OFF: LTC signal is not recorded. When LTC REC is set ON and REC/FREE selector switch is set to REC, REGEN operation is performed by time code generator.
TC MODE	USER REAL	Sets time code (time data) when FREE RUN/REC RUN selector switch at front of camera recorder is set to FREE RUN. USER: Free-run operation is performed on basis of user setting. REAL: Real-time; free-run operation is performed on basis of time which was set on TIME DATE menu.
UB MODE	USER REAL SCENE	Selects UB operation method. USER: User setting (fixed) REAL: Real-time; UB real-time operation is performed on basis of time which was set on TIME DATE menu. SCENE: Present UB value is automatically incremented for each cut.

Menu Items (Continued)

Example of display on EVF or at LINE OUT connector of VTR

```
        - TIME CODE -

 01 VITC POSITION (1)        11
 02 VITC POSITION (2)        13
→03 LTC REC                 OFF
 04 TC MODE                 USER
 05 UB MODE                 USER

 ** PREVIOUS MENU

 - - - - END OF DATA - - - -
```


AUDIO Menu

Underlining denotes the mode set as the default.

Viewfinder sub menu item	Mode set	Functions
FRONT MIC (Front mic level)	−40 dB −50 dB −60 dB	Selects camera's mic input level.
REAR MIC CH1 (Rear mic CH1 level)	−40 dB −50 dB −60 dB	Selects mic input level from AUDIO CH1 input connector in jack section.
REAR MIC CH2 (Rear mic CH2 level)	−40 dB −50 dB −60 dB	Selects mic input level from AUDIO CH2 input connector in jack section.
LINE CH1/CH2	+4 dB 0 dB −6 dB	Selects LINE input level from AUDIO CH1/CH2 input connectors in jack section.
PHANTOM CH1 (Phantom CH1 power)	ON OFF	Selects whether phantom mic (CH1) is to be used. ON: Phantom mic (+48 V) is used. OFF: Normal mic is used.
PHANTOM CH2 (Phantom CH2 power)	ON OFF	Selects whether phantom mic (CH2) is to be used. ON: Phantom mic (+48 V) is used. OFF: Normal mic is used.
HI-FI REC	ON OFF	Selects whether Hi-Fi audio is to be recorded. ON: Hi-Fi audio is recorded. OFF: Hi-Fi audio is not recorded.
DOLBY NR	ON OFF	Sets Dolby NR ON or OFF. ON: Dolby NR is turned ON. OFF: Dolby NR is turned OFF.
STEREO/MONO	STEREO MONO	Selects the input sound mode from AUDIO CH1/CH2 input connectors in jack section. STEREO: Stereo sound is selected. MONO: Monaural sound is selected.*

Example of display on EVF or at LINE OUT connector of VTR

```
        - AUDIO -

 01 FRONT MIC              -50dB
 02 REAR MIC CH1           -50dB
 03 REAR MIC CH2           -50dB
 04 LINE CH1/CH2             0dB
→05 PHANTOM CH1             OFF
 06 PHANTOM CH2             OFF
 07 HI-FI REC                ON
 08 DOLBY NR                OFF
 09 STEREO/MONO          STEREO
 ** PREVIOUS MENU
 - - - - END OF DATA - - - -
```

*When LTC REC (page 67) is set to ON, only CH1 can be used as the normal audio channel. If MONO is now selected on this menu, the sound from two microphones (or lines) can be mixed and recorded. (However, Hi-Fi audio will also be mixed.)

Menu Items (Continued)

BATTERY Menu

Ni-Cd 12 V is the mode set as the default.

Viewfinder sub menu item	Mode set	Functions	Battery name (product name) (see Notes)
SELECT	Ni-Cd 12 V	Selected when AC adapter or Ni-Cd battery (12 V) is used.	AU-BP402 AU-BP220 NP-1, NP-90
	Ni-Cd 13.2 V	Selected when Ni-Cd battery (13.2 V) is used.	Magnum 13
	Ni-Cd 14.4 V	Selected when Ni-Cd battery (14.4 V) is used.	Magnum 14
	DIGITAL	Selected when digital nickel-cadmium battery (13.2 V or 14.4 V) is used.	Magnum 13 digital Magnum 14 digital

NOTE

- The AU-BP402 and AU-BP220 batteries are made by Matsushita Electric Industrial Co., Ltd.
- The NP-1 and BP-90 batteries are made by Sony Corp.
- The Magnum series of batteries is made by Anton Bauer.

Example of display on EVF or at LINE OUT connector of VTR

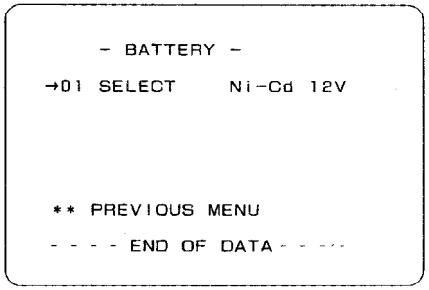

DIAGNOSIS Menu

Viewfinder sub menu item	Mode set	Functions
ERROR LOG DATA		Displays the last VTR error which occurred.
CYLINDER	000–9900h	Displays number of hours during which cylinder has rotated. The level is displayed every 10 hours. (The value below ten is discarded.)
CAMERA Ver		Displays version of camera microcomputer. Example: Ver A <1.1>
SERVO Ver		Displays version of servo microcomputer. (Example: Same as that for camera microcomputer)
SYSCON Ver		Displays version of syscon microcomputer. (Example: Same as that for camera microcomputer)
MEMORY INIT.?		Memory initialization after back-up battery has been replaced. This operation must be performed after the back-up battery has been replaced.

Menu Items (Continued)

DIAGNOSIS Menu (Continued)

Operation method and example of display on EVF or at LINE OUT connector of VTR

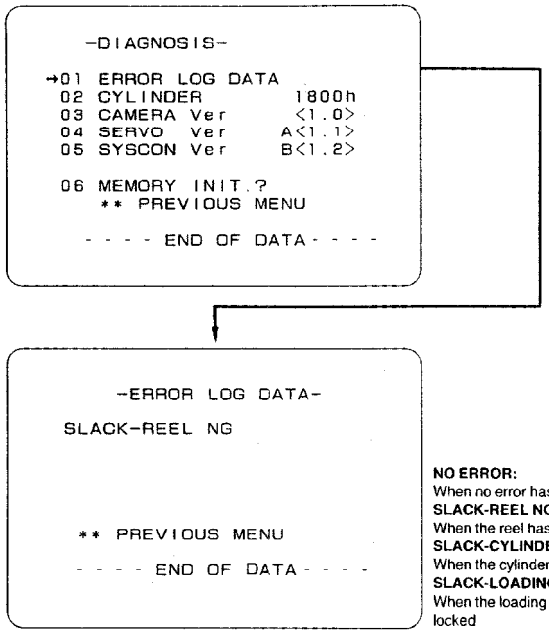

NO ERROR:
When no error has occurred
SLACK-REEL NG:
When the reel has locked
SLACK-CYLINDER NG:
When the cylinder has locked
SLACK-LOADING NG:
When the loading motor has locked

The ERROR LOG DATA details can be checked on the sub-sub screen.

Operation method:

1 To display the sub-sub screen:
Use the SHIFT button to align the arrow with "01 ERROR LOG DATA," and press the START button.

2 To return to the sub screen display:
Use the SHIFT button to align the arrow with "**PREVIOUS MENU," and press the START button.

To initialize the memory after the back-up battery has been replaced

1 Press the SHIFT button to align the arrow with "06 MEMORY INIT.?"

2 Press the START button.
When initialization is completed, "06 INITIALIZED" appears.

NOTE

The memory will not be initialized properly if the menu is exited or operation is returned to the MAIN MENU before "06 INITIALIZED" has appeared.

Connector Signals

Audio input connector (XLR-3P)

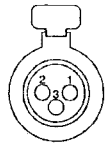

Pin No.	Signal
1	GND
2	HOT
3	COLD

External DC input connector (XLR-4P)

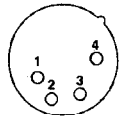

Pin No.	Signal
1	GND
2, 3	
4	+12 V

26P VTR connector

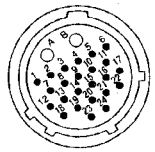

Pin No.	Signal
1	COMPOSITE VIDEO
2	COMPOSITE VIDEO GND
9	CAMERA MIC (H)
10	CAMERA MIC (C)
11	CAMERA MIC GND
12	VTR START/STOP
15	REC TALLY/WARNING
16	5P DATA
21	5P CLOCK
23	CTL PULSE
24	5P +5 V
A	+12 V
B	GND

Handling the Phantom Mic

This camera recorder is designed to enable a phantom mic to be used as the unit's microphone (CH1/CH2). It can be selected on menu item 3 "AUDIO" in the viewfinder. For further details, refer to "How to set the menu items" (page 69).
[The phantom power supply is set to +48 V. Before shipment from the manufacturing plant, the camera recorder was set for using the regular microphone (phantom power OFF).]

Condensation

Condensation may form on this camera recorder's cylinder when the unit is moved from a cold place into warm surroundings or when it is used in very humid conditions.
Causing the tape to travel when condensation has formed will damage the cylinder and tape.

Bear in mind the following points:
- Before inserting the cassette, set the CAM/VTR (or POWER) switch to ON or POWER SAVE, and check that none of the warning lamps are flashing and that HUMID has not lighted on the display.
- Where possible, avoid using the camera recorder in any location where condensation is liable to form.
- Remove the cassette tape when moving the camera recorder.
- If the HUMID display flashes while the cassette tape is still loaded, take the following action:
  1. Set the CAM/VTR (or POWER) switch to the ON or POWER SAVE position.
  2. Press the EJECT button to remove the cassette.

Without taking further action, wait until the HUMID display goes off.
Once this display goes off, insert the cassette tape, allow it to run and check that nothing untoward happens.
When the HUMID OPE menu item on the OPERATION menu is set to ENABLE, the VTR can be forcibly operated even when the condensation sensor has detected the formation of condensation.
However, this is an extremely risky setting which should never be used unless shooting is absolutely imperative.
The manufacturer will not be held liable for any damage which may result from operation in the HUMID OPE ENABLE.

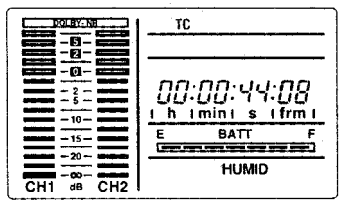

Maintenance

- This camera recorder contains precision-engineered mechanisms which are designed to do full justice to the unit's high performance. In order for the unit to give years of service, care should be taken to maintain it properly.
  Lubrication, the replacement of parts and the adjustment and servicing of the electrical parts require sophisticated technology and equipment. Consult with your dealer before proceeding with any of these activities.
- Failure to remove dust and dirt which have accumulated inside, supply lubricating oil, replace worn parts (heads, etc.) or otherwise maintain and inspect the unit will not only make it impossible to obtain a good picture and satisfactory recordings but will also adversely affect the unit's service life. For this reason, inspection and maintenance work should be performed in good time.

Head cleaning

If the symptom shown left should occur, it means that the video heads are dirty. Use the cleaning tape (NV-TCLA), which is available as an optional accessory, to clean the video heads. If the symptom persists, consult with your dealer.

NOTE

Remember that repeated head cleaning will shorten the service life of the heads.

SECTION 2

DISASSEMBLY PROCEDURES

CONTENTS

2-1. DISASSEMBLY FLOW CHART ····· 2-2

2-2. DETAILED DISASSEMBLY METHOD ····· 2-3

[CAMERA/VTR]

2-2-1. Removal of the Right Panel ····· 2-3
2-2-2. Open of the Process C.B.A. ····· 2-3
2-2-3. Removal of the Video C.B.A. ····· 2-3
2-2-4. Removal of the Audio/System Control C.B.A. ····· 2-3
2-2-5. Removel of the Process C.B.A. ····· 2-4
2-2-6. Removal of the Power/Drive C.B.A. ····· 2-4
2-2-7. Removal of the Mechanism Interface C.B.A. ····· 2-4
2-2-8. Removal of the Left Panel ····· 2-4
2-2-9. Removal of the Power/AV Jack Unit ····· 2-4
2-2-10. Removal of the Rear Jack Unit ····· 2-5
2-2-11. Removal of the Camera Out Unit ····· 2-5
2-2-12. Removal of the LCD, Super Iris, Monitor VR C.B.A. ····· 2-6
2-2-13. Removal of the Toggle SW Unit ····· 2-6
2-2-14. Removal of the Power SW, Mode Check Unit ····· 2-6
2-2-15. Removal of the Handle ····· 2-6
2-2-16. Removal of the Operation Unit ····· 2-6
2-2-17. Removal of the Front Panel Unit ····· 2-6
2-2-18. Removal of the Cassette Compartment ····· 2-7

[EVF]

2-2-19. Removal of the Top Case ····· 2-8
2-2-20. Removal of the Front C.B.A. ····· 2-8
2-2-21. Removal of the H DEF, V DEF, CN C.B.A. ····· 2-8

2-3. SCREWS ····· 2-9

2-4. DIMENSIONS ····· 2-10

2-1. DISASSEMBLY FLOWCHART

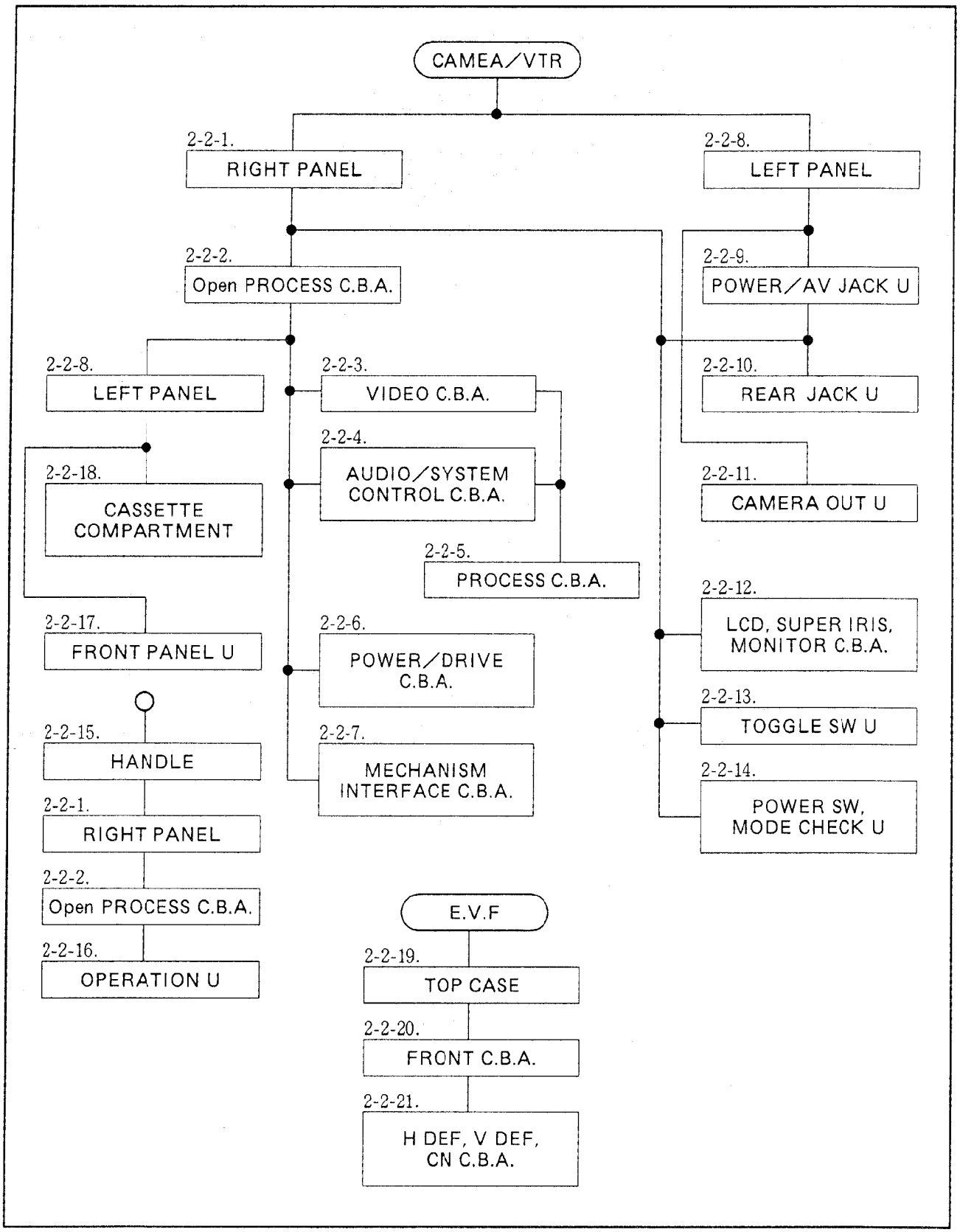

2-2. DETAIL DISASSEMBLY METHOD

<CAMERA/VTR UNIT>

2-2-1. Removal of the Right Panel

1. Unscrew the 7 screws (A). (Figure D2)
2. Carefully open the Right Panel (with taking care for connection to the Rear Jack C.B.A.).
3. Disconnect the connector P12 on the Rear Jack C.B.A..

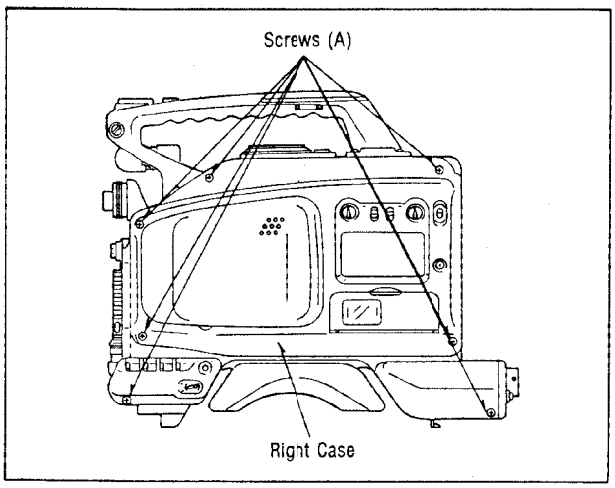

Figure D2

2-2-2. Open the Process C.B.A.

1. Unscrew the 5 screws (B) and remove the C.B.A. Plate. (Figure D3)
2. Carefully open the C.B.A. unit.

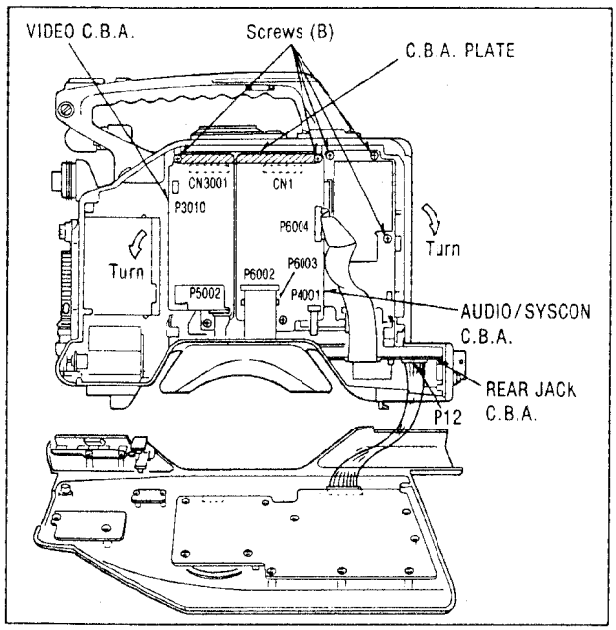

Figure D3

2-2-3. Removal of the Video C.B.A.

1. Disconnect the connector P3010 (from AV OUT) and the flexible cable P5002 (from CYL Motor) on the Video C.B.A. (Figure D4)
2. Unscrew the screw (C-1) and the screw (C-2).
3. Disconnect the connector CN3001 and remove the Video C.B.A. from the Process C.B.A.

2-2-4. Removal of the Audio/System Control C.B.A.

1. Disconnect the 4 flexible cables P6004 (form Rear Jack), P6002, P6003 (from Mecha I/F) and P4001 (from A/C Head) on the Audio/System Control C.B.A. (Figure D4)
2. Unscrew the screw (D).
3. Disconnect the connector CN6001 and remove the Audio/System Control C.B.A. from the Process C.B.A.

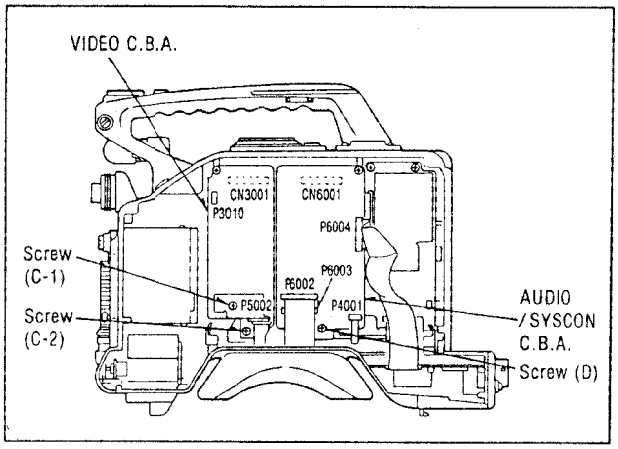

Figure D4

2-2-5. Removal of the Process C.B.A.

1. Disconnect the 4 connectors P3003 (from CCD), P3005 (from Lens), P3006 (from Camera Out), P3007 (from Genlock) and flexible cable P3004 (from CCD Pulse) on the component side of the Process C.B.A. (Figure D5)
2. Disconnect the 2 flexible cables P3001, P3002 (from Power) on the foil side of the Process C.B.A.
3. Unscrew the 2 screws (E). (Figure D5)

2-2-6. Removal of the Power/Drive C.B.A.

1. Disconnect the connector P1003 (from Rear Jack) and the 2 flexible cables P2001, P2002 (from Mecha I/F) on the Power C.B.A. (Figure D5)
2. Unscrew the 2 screws (F). (Figure D5)

2-2-7. Removal of the Mechanism Interface C.B.A.

1. Disconnect the 12 connectors P9002 (from CC Filter), P9001 (from EVF), P9020 (from Operate), P9021 (from Safety Tab), P9019 (from Mecha Mode), P9018 (from Anton Battery), P9017 (from T Photo), P9004 (from AWB SW), P9006 (from S Photo), P9008 (from LI Battery), P9007 (from FE Head) and P9005 (from Loading Motor). (Figure D5)
2. Disconnect the 2 flexible cables P9015 (from CYL Motor), P9016 (from CAP Motor).
3. Unscrew the 4 screws (G). (Figure D5)

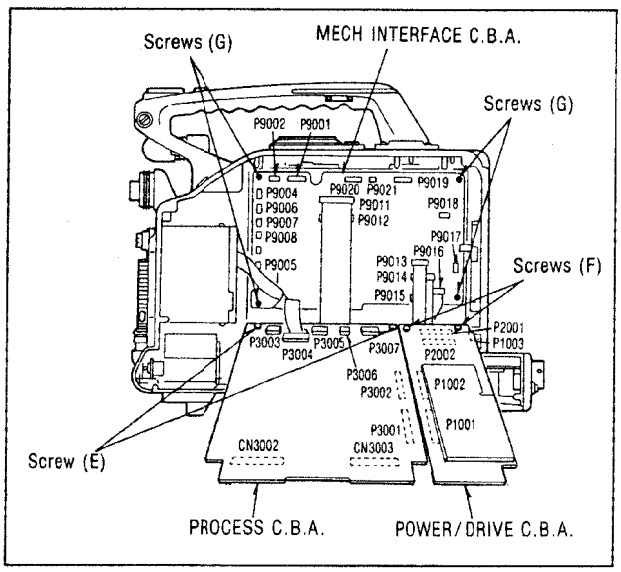

Figure D5

2-2-8. Removal of the Left Panel.

1. Unscrew the 2 screws (H-1) and remove the Cassette Cover. (Figure D6)
2. Loose the 4 screws (H-2).

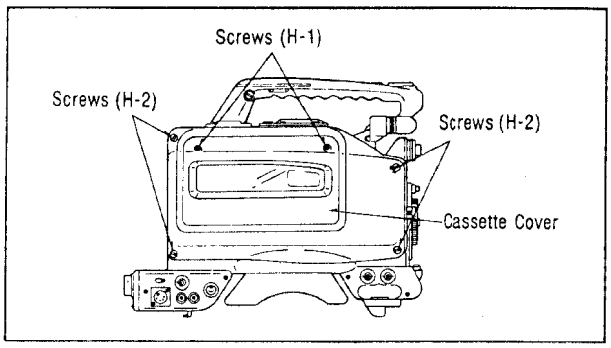

Figure D6

2-2-9. Removal of the Power/AV Jack Unit.

1. Unscrew the 3 screws (I). (Figure D7)
2. Carefully pull the Power/AV Jack Unit out from the unit.(with taking care of connection to other C.B.A.s.)
3. Disconnect the 6 connectors P9700 (from Video) on the AV Out C.B.A. and P18, P13, P14, P15, P17 (from AV Out) on the Rear Jack C.B.A. (Figure D8)

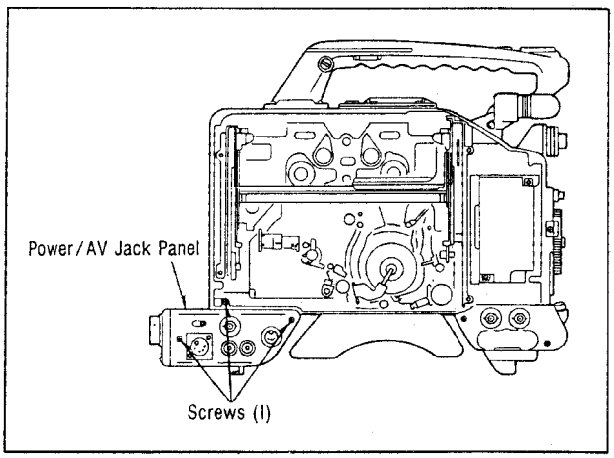

Figure D7

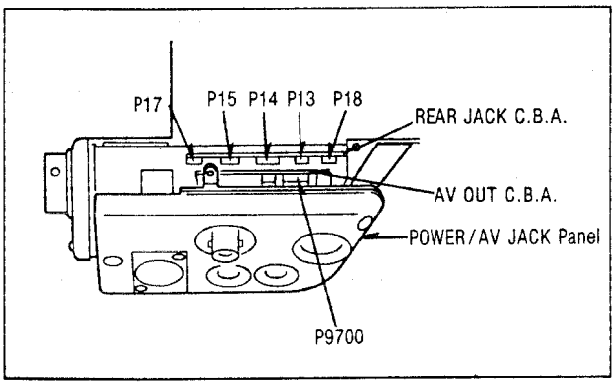

Figure D8

2-2-10. Removal of the Rear Jack Unit.

1. Unscrew the 4 screws (J). (Figure D9)
2. Disconnect the connectors P20 (from Power) and the flexible cable P10 (from Syscon) on the right side of Rear Jack C.B.A. (Figure D10)
3. Carefully Pull the Rear Jack Unit out from the unit.

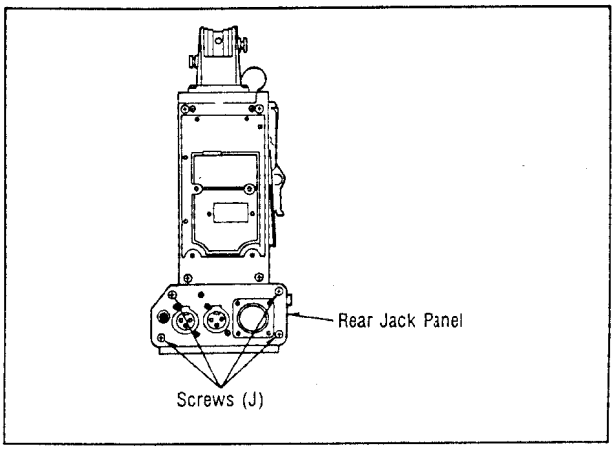

Figure D9

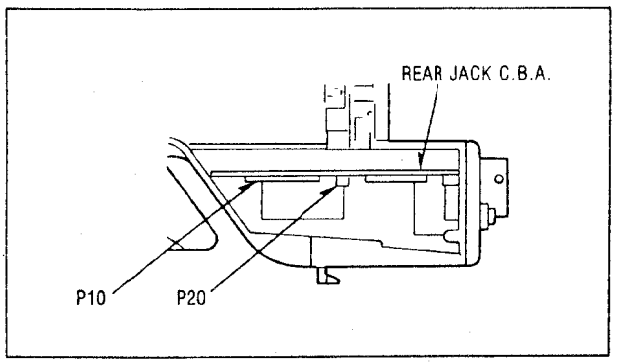

Figure D10

2-2-11. Removal of the Camera Out Unit

1. Unscrew the 2 screws (K). (Figure D11)
2. Carefully pull the Camera Out Unit and disconnect the 2 connectors P9600 (from Process) on the Camera Out C.B.A. and P9500 (from Process) on the Gen Lock C.B.A.

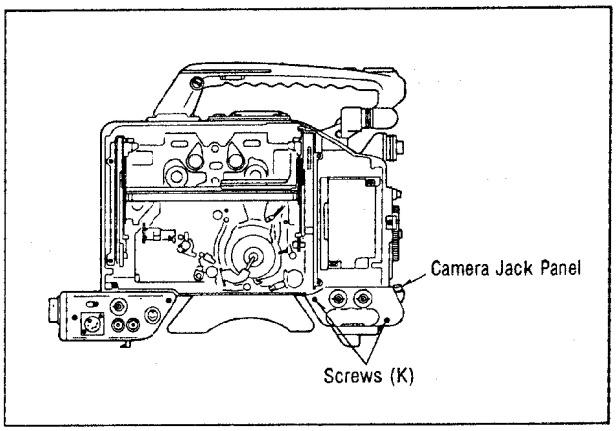

Figure D11

2-2-12. Removal of the LCD, Super Iris & Monitor VR C.B.A.s.

1. Pull off the 2 Audio Level VR knobs on the front side of the Right Panel.
2. Unscrew the 11 screws (L-1) on the LCD C.B.A., the 2 screws (L-2) on the Super Iris C.B.A. and the 2 screws (L-3) on the Monitor C.B.A. (Figure D12)

2-2-13. Removal of the Toggle SW Unit

1. Disconnect the connector P9300 on the Toggle SW C.B.A. (Figure D12)
2. Unscrew the 2 screws (M) and remove the Toggle SW Unit.

2-2-14. Removal of the Power SW & Mode Check Unit

1. Disconnect the 2 connectors P9400 on the Power SW C.B.A. and P9401 on the Mode Check C.B.A. (Figure D12)
2. Unscrew the screw (N) and remove the Power SW Unit.

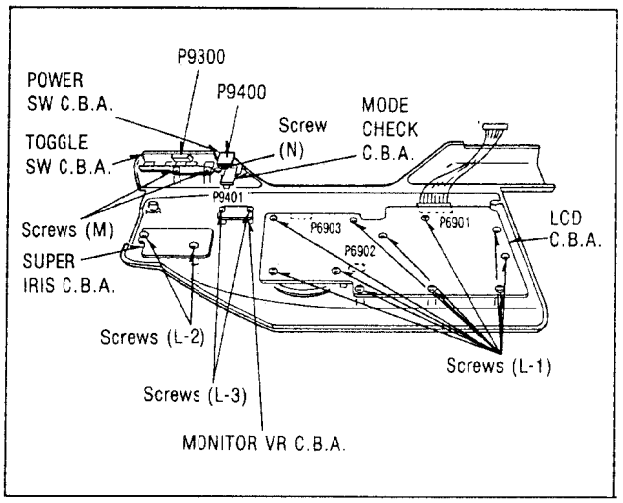

Figure D12

2-2-15. Removal of the Handle

1. Unscrew the 2 screws (O-1) and the 4 screws (O-2). (Figure D13)
2. Carefully left up the Handle and disconnect the 2 connectors of the MIC and Back Tally Lamp.

2-2-16. Removal of the Operation Unit

1. Unscrew the 4 screws (P). (Figure D13)
2. Carefully left up the Operation Unit and disconnect the connector P501 (from Mecha I/F) and taking care connection cable of the Back Tally Lamp.

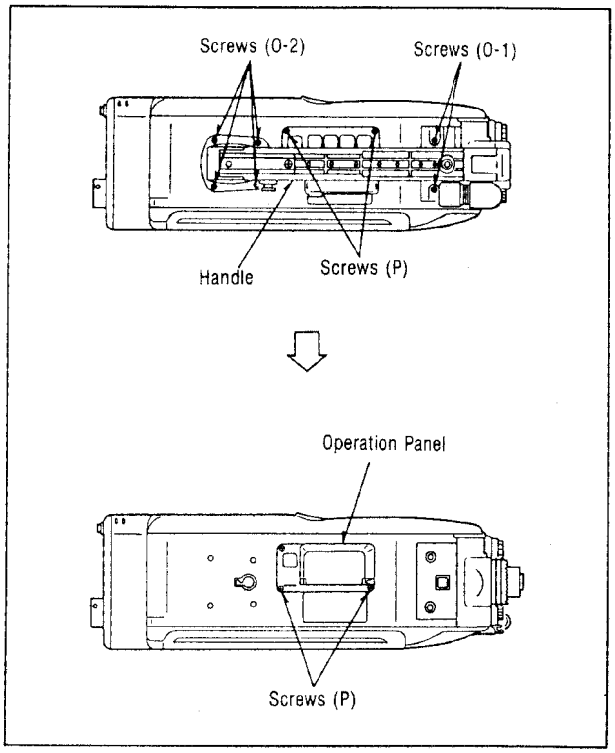

Figure D13

2-2-17. Removal of the Front Panel Unit

1. Disconnect the 4 connectors P3003 (from CCD), P3005 (from Lens) on the Process C.B.A. and P9002 (from CC Filter), P9004 (from AWB SW) on the MECHA Interface C.B.A. (Figure D14)
2. Disconnect the flexible cable P1 on the CCD Pulse C.B.A. (Figure D14)
3. Unscrew the 4 screws (Q) and carefully remove the front Panel Unit from the unit. (Figure D15)

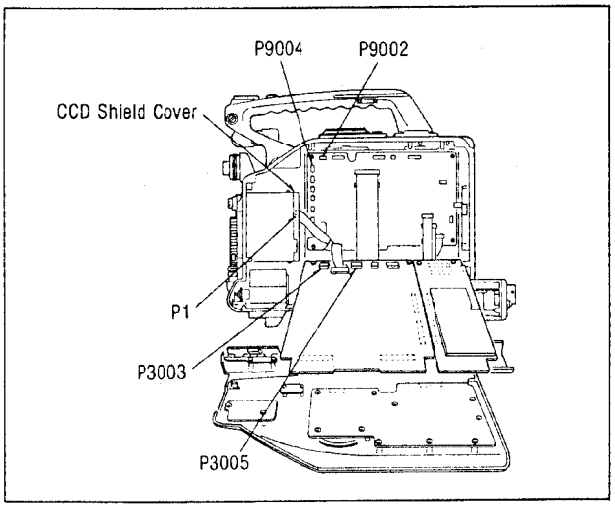

Figure D14

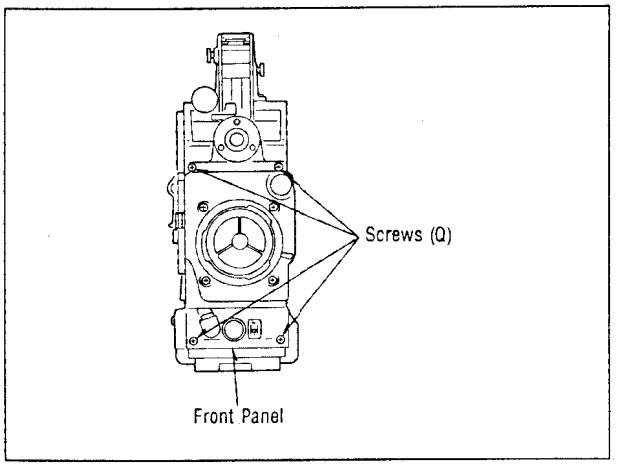

Figure D15

2-2-18. Removal of Cassette Compartment Unit

1. Disconnect the 2 connectors P9017 (from T Photo), P9006 (from S Photo) on the MECHA Interface C.B.A. (Figure D16)
2. Unscrew the 4 screws (R-1) on the Rear Panel. (Figure D17)
3. Unscrew the 2 screws (R-2) on the top of the Front Panel. (Figure D17)
4. Unscrew the 3 screws (S-1) on the mechanism chassis frame. (Figure D18)
5. Slide the Top Case to the right side of unit and unlock the 2 boss from the mechanism chassis. (Figure D16)
6. Unscrew the 2 screws (S-2) and the 4 screws (S-3). (Figure D18)
7. Remove the Cassette Compartment from the mechanism chassis.

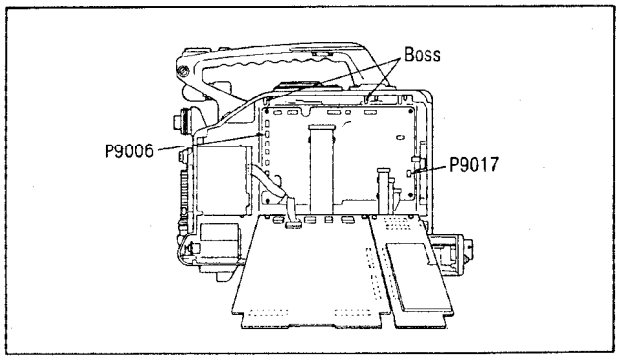

Figure D16

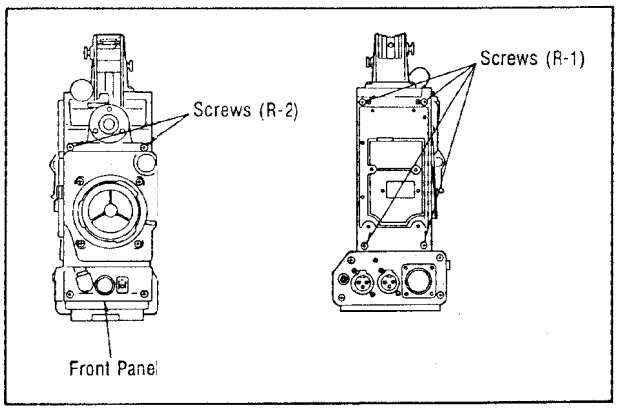

Figure D17

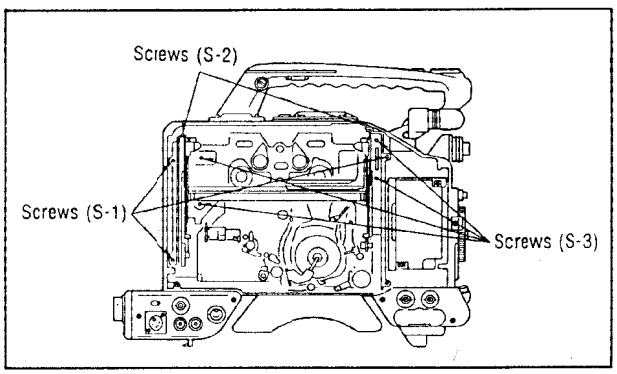

Figure D18

<EVF UNIT>

2-2-19. Removal of the Top Case

1. Unscrew the screw (T-1) on the connection ring. (Figure D19)
2. Unscrew the 4 screws (T-2) on the Bottom Case.
3. Left up the Top Case.

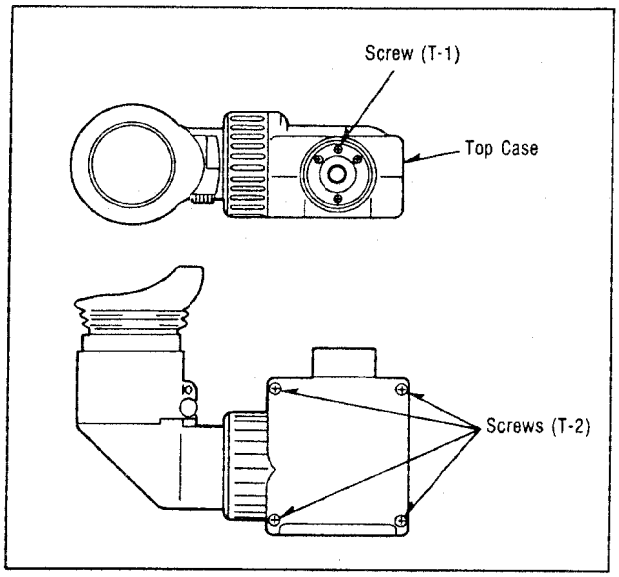

Figure D19

2-2-20. Removal of the Front C.B.A.

1. Disconnect the connector P7004 on the Front C.B.A. (Figure D20)
2. Move the CRT Unit out from the Bottom Case.
3. Unscrew the 2 screws (U) and remove the C.B.A. Plate.
4. Pull the Front C.B.A. out from the Bottom Case.
5. Disconnect connector P7015 on the Front C.B.A.

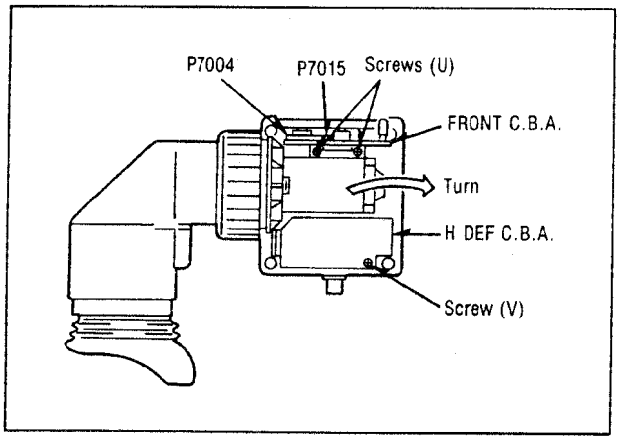

Figure D20

2-2-21. Removal of the H DEF,V DEF & CN C.B.A.

1. Unscrew the screw (V) on the H DEF C.B.A. (Figure D20)
2. Carefully lift up the left side of the H DEF C.B.A. (Figure D21)
3. Unscrew the screw (W) and the nut (X) on the V DEF C.B.A. (Figure D21)
4. Disconnect 2 connectors P7008 on the CN C.B.A. and P7002 on the V DEF C.B.A..
5. Carefully pull the C.B.A.s. out from the Bottom Case.

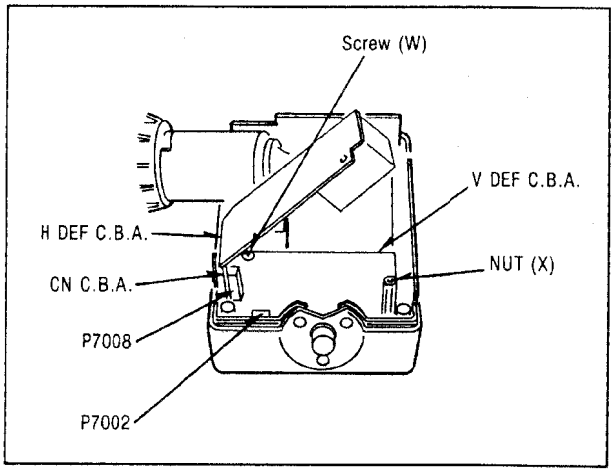

Figure D21

2-3. SCREWS

(A) 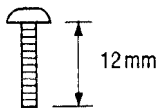 XSB3+12FZS (BLACK)	(B), (C-2), (E), (F), (G) XYE3+EF6R (RED)	(C-1), (D) 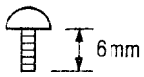 XYC3+BF6 (RED)	(H-1) 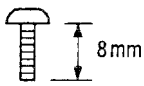 XSB26+8FZ (BLACK)
(H-2) 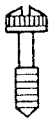 VHD0820 (SILVER)	(I), (K) 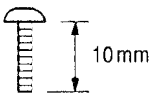 XSB3+10FZS (BLACK)	(J), (Q), (R-1), (R-2) 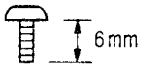 XSB3+6FZS (BLACK)	(L-1), (L-2), (L-3) 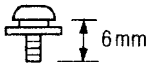 XYN3+K6RS (RED)
(M) (N) 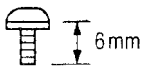 XYN3+C6 (RED)	(O-1) 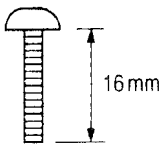 XSB4+16FZS (BLACK)	(O-2) 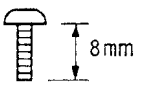 XSB3+8FZS (BLACK)	(P) 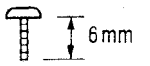 XSB2+6FZ (BLACK)
(S-1) XTN26+6F (GOLD)	(S-2) 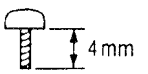 XSN26+4 (GOLD)	(S-3) 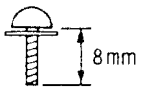 XYE26+AF8R (RED)	(T-1) 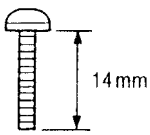 XYN3+C14FZ (BLACK)
(T-2) 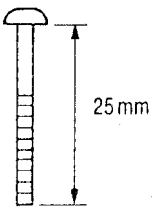 XTN3+25GFZ (BLACK)	(U) 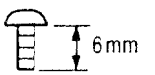 XTN3+6G (GOLD)	(V) (W) 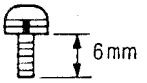 XYN26+K6FR (RED)	

2-4. DIMENSIONS

unit: mm

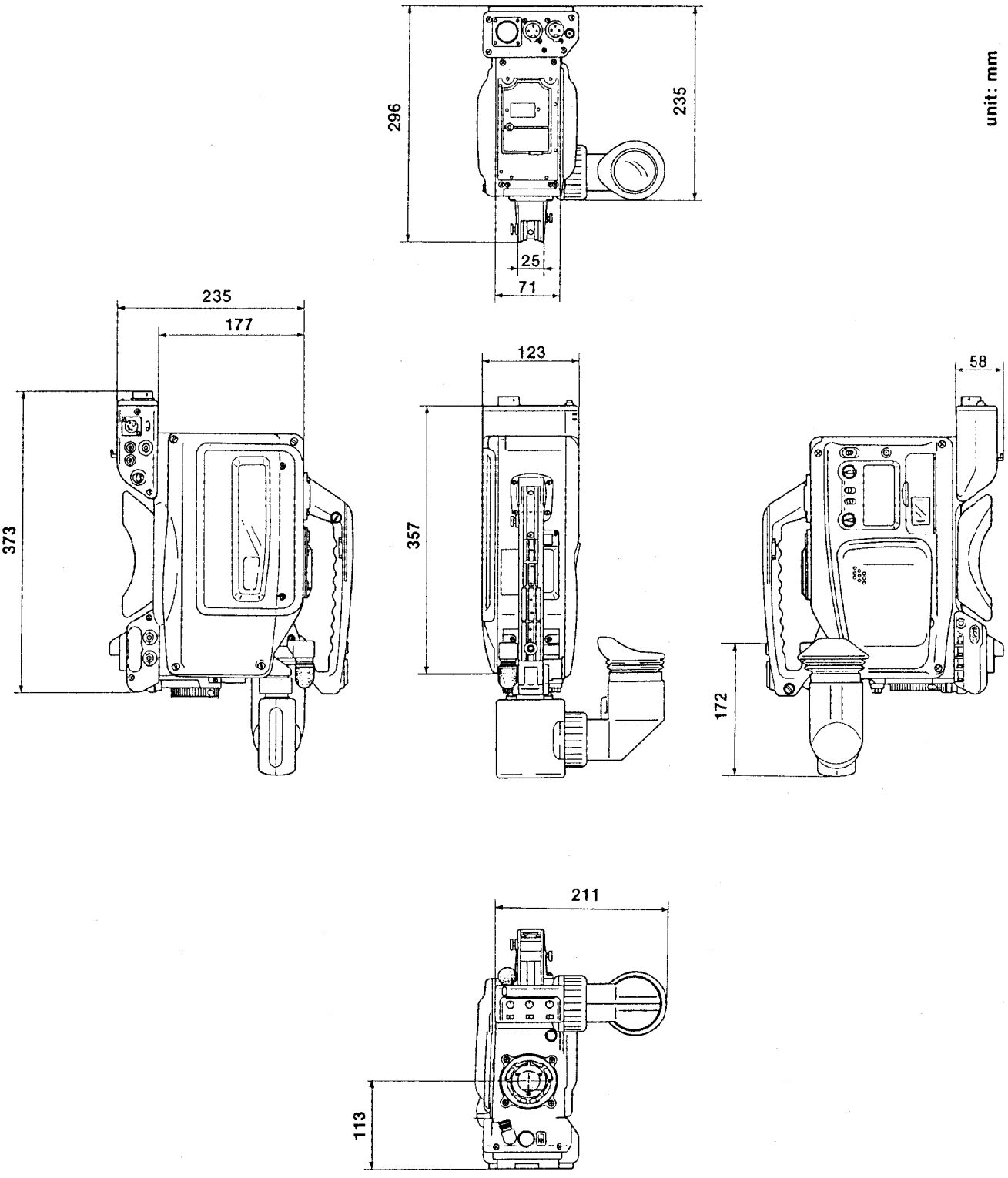

SECTION 3

SCHEMATIC DIAGRAMS

NOTE

(EX1)

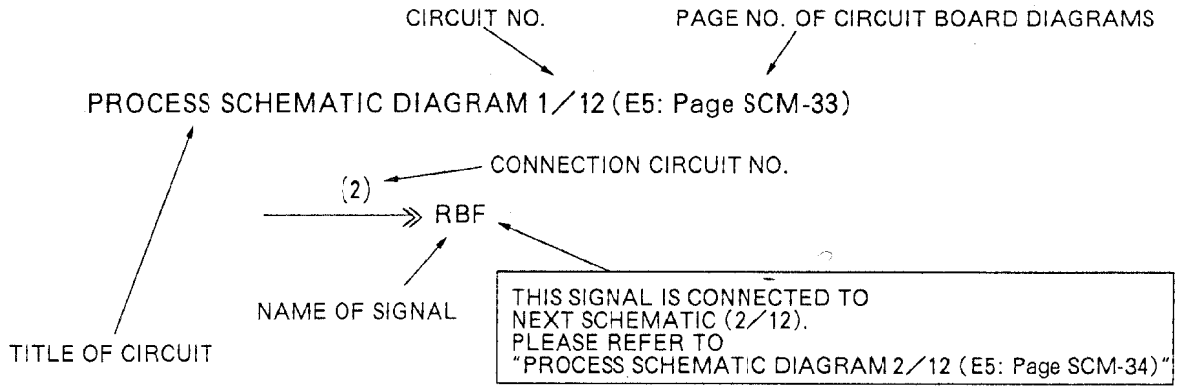

(EX2)

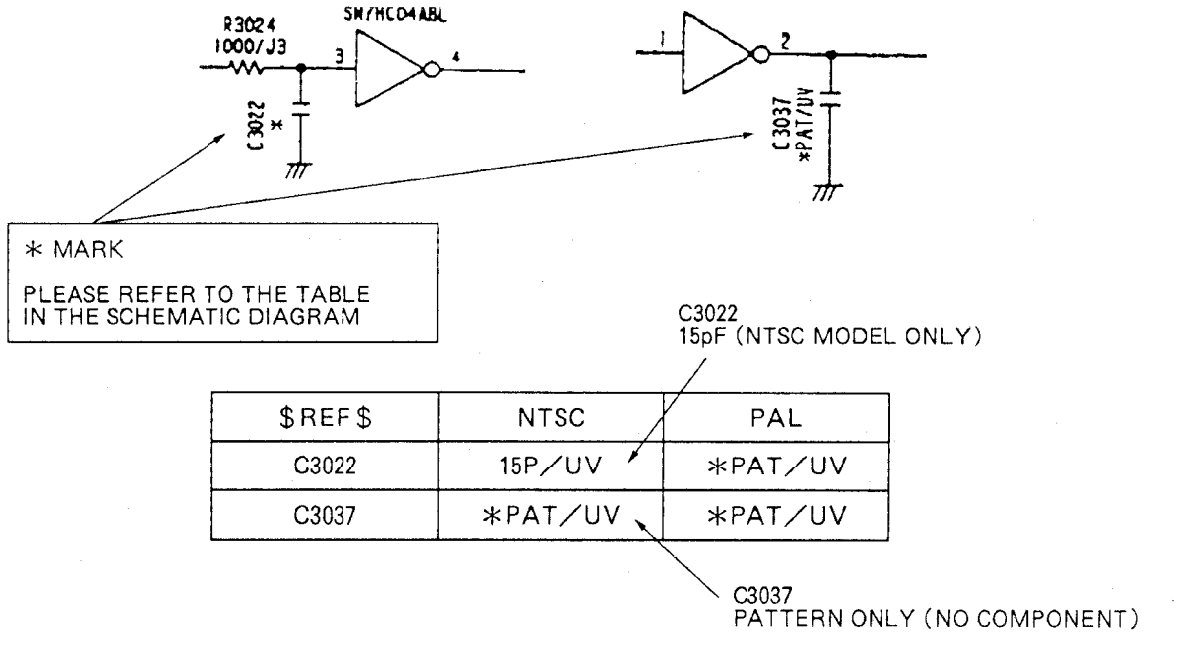

REF	NTSC	PAL
C3022	15P/UV	*PAT/UV
C3037	*PAT/UV	*PAT/UV

CONTENTS

CIRCUIT BOARD LAYOUT SCM-4

OVERALL SCHEMATIC DIAGRAM SCM-5
MECHA INTERFACE SCHEMATIC DIAGRAM 1/1 (E14:Page CBA-3) SCM-6

VIDEO 1 SCHEMATIC DIAGRAM 1/6 (E11:Page CBA-4) SCM-7
VIDEO 2 SCHEMATIC DIAGRAM 2/6 (E11:Page CBA-4) SCM-8
CHROMA SCHEMATIC DIAGRAM 3/6 (E11:Page CBA-4) SCM-9
HEAD AMP SHEMATIC DIAGRAM 4/6 (E11:Page CBA-4) SCM-10
CNR SCHEMATIC DIAGRAM 5/6 (E11:Page CBA-4) SCM-11
VIDEO I/F SCHEMATIC DIAGRAM 6/6 (E11:Page CBA-4) SCM-12
VIDEO COMPARISON CHART SCM-13
VIDEO SUB SCHEMATIC DIAGRAM (E12:Page CBA-4) SCM-13

SYSCON/SERVO SCHEMATIC DIAGRAM 1/8 (E13:Page CBA-7) SCM-14
SUB SYSCON SCHEMATIC DIAGRAM 2/8 (E13:Page CBA-7) SCM-15
TIME CODE SCHEMATIC DIAGRAM 3/8 (E13:Page CBA-7) SCM-16
NORMAL AUDIO SCHEMATIC DIAGRAM 4/8 (E13:Page CBA-7) SCM-17
FM AUDIO SCHEMATIC DIAGRAM 5/8 (E13:Page CBA-7) SCM-18
AUDIO AGC SCHEMATIC DIAGRAM 6/8 (E13:Page CBA-7) SCM-19
AUDIO SYSCON I/F 1 SCHEMATIC DIAGRAM 7/8 (E13:Page CBA-7) SCM-20
AUDIO SYSCON I/F 2 SCHEMATIC DIAGRAM 8/8 (E13:Page CBA-7) SCM-21
AUDIO SYSCON COMPARISON CHART SCM-21

POWER SCHEMATIC DIAGRAM 1/3 (E10:Page CBA-9) SCM-22
DRIVE SCHEMATIC DIAGRAM 2/3 (E10:Page CBA-9) SCM-23
POWER SCHEMATIC DIAGRAM 3/3 (E10:Page CBA-9) SCM-24
POWER COMPARISON CHART SCM-24

REAR JACK SCHEMATIC DIAGRAM 1/2 (E6:Page CBA-3) SCM-25
REAR JACK SCHEMATIC DIAGRAM 2/2 (E6:Page CBA-3) SCM-26
REAR JACK COMPARSION CHART SCM-26

LCD SCHEMATIC DIAGRAM 1/1 (E30:Page CBA-8) SCM-27
LCD COMPARION CHART SCM-28
POWER SW SCHEMATIC DIAGRAM 1/1 (E26:Page CBA-8) SCM-28
SUPER IRIS SCHEMATIC DIAGRAM 1/1 (E27:Page CBA-9) SCM-29
MONITOR VR SCHEMATIC DIAGRAM 1/1 (E28:Page CBA-9) SCM-29
TOGGLE SW SCHEMATIC DIAGRAM 1/1 (E29:Page CBA-9) SCM-30
MODE CHEAK SCHEMATIC DIAGRAM 1/1 (E25:Page CBA-8) SCM-30

PROCESS SCHEMATIC DIAGRAM 1/12 (E15:Page CBA-10) SCM-31
PROCESS SCHEMATIC DIAGRAM 2/12 (E15:Page CBA-10) SCM-32
PROCESS SCHEMATIC DIAGRAM 3/12 (E15:Page CBA-10) SCM-33
PROCESS SCHEMATIC DIAGRAM 4/12 (E15:Page CBA-10) SCM-34
PROCESS SCHEMATIC DIAGRAM 5/12 (E15:Page CBA-10) SCM-35
PROCESS SCHEMATIC DIAGRAM 6/12 (E15:Page CBA-10) SCM-36
PROCESS SCHEMATIC DIAGRAM 7/12 (E15:Page CBA-10) SCM-37
PROCESS SCHEMATIC DIAGRAM 8/12 (E15:Page CBA-10) SCM-38
PROCESS SCHEMATIC DIAGRAM 9/12 (E15:Page CBA-10) SCM-39
PROCESS SCHEMATIC DIAGRAM 10/12 (E15:Page CBA-10) SCM-40
PROCESS SCHEMATIC DIAGRAM 11/12 (E15:Page CBA-10) SCM-41
PROCESS SCHEMATIC DIAGRAM 12/12 (E15:Page CBA-10) SCM-42
PROCESS COMPARISON CHART SCM-43

CCD SCHEMATIC DIAGRAM 1/1 ..... SCM-44
CCD DRIVE SCHEMATIC DIAGRAM 1/1 (E20:Page CBA-14) SCM-45
CCD PULSE SCHEMATIC DIAGRAM 1/1 (E19:Page CBA-13) SCM-46

H DEF SCHEMATIC DIAGRAM 1/1 (E1:Page CBA-11) ····· SCM-47
V DEF SCHEMATIC DIAGRAM 1/1 (E2:Page CBA-11) ····· SCM-48
CN SHEMATIC DIAGRAM 1/1 (E3:Page CBA-12) ····· SCM-49
FRONT SCHEMATIC DIAGRAM 1/1 (E4:Page CBA-12) ····· SCM-50
CRT MASK SCHEMATIC DIAGRAM 1/1 (E5:Page CBA-12) ····· SCM-51

OPERATION SCHEMATIC DIAGRAM 1/1 (E24:Page CBA-13) ····· SCM-51
AV OUT SCHEMATIC DIAGRAM 1/1 (E8:Page CBA-12) ····· SCM-52
GEN LOCK SCHEMATIC DIAGRAM 1/1 (E31:Page CBA-12) ····· SCM-52
MACHANISM CONNECTION SCHEMATIC DIAGRAM 1/1 (E37:Page CBA-2) ····· SCM-52

IMPORTANT SAFETY NOTICE

COMPONENTS IDENTIFIED WITH THE MARK ⚠ HAVE THE SPECIAL CHARACTERISTICS FOR SAFETY.
WHEN REPLACING ANY OF THESE COMPONENTS, USE ONLY THE SAME TYPE.

NOTE

DO NOT USE THE PART NUMBER SHOWN ON THIS DRAWING FOR ORDERING. THE CORRECT PART NUMBER IS SHOWN IN THE PARTS LIST. AND MAY BE SLIGHTLY DIFFERENT OR AMENDED SINCE THIS DRAWING WAS PREPARED.

CIRCUIT BOARD LAYOUT

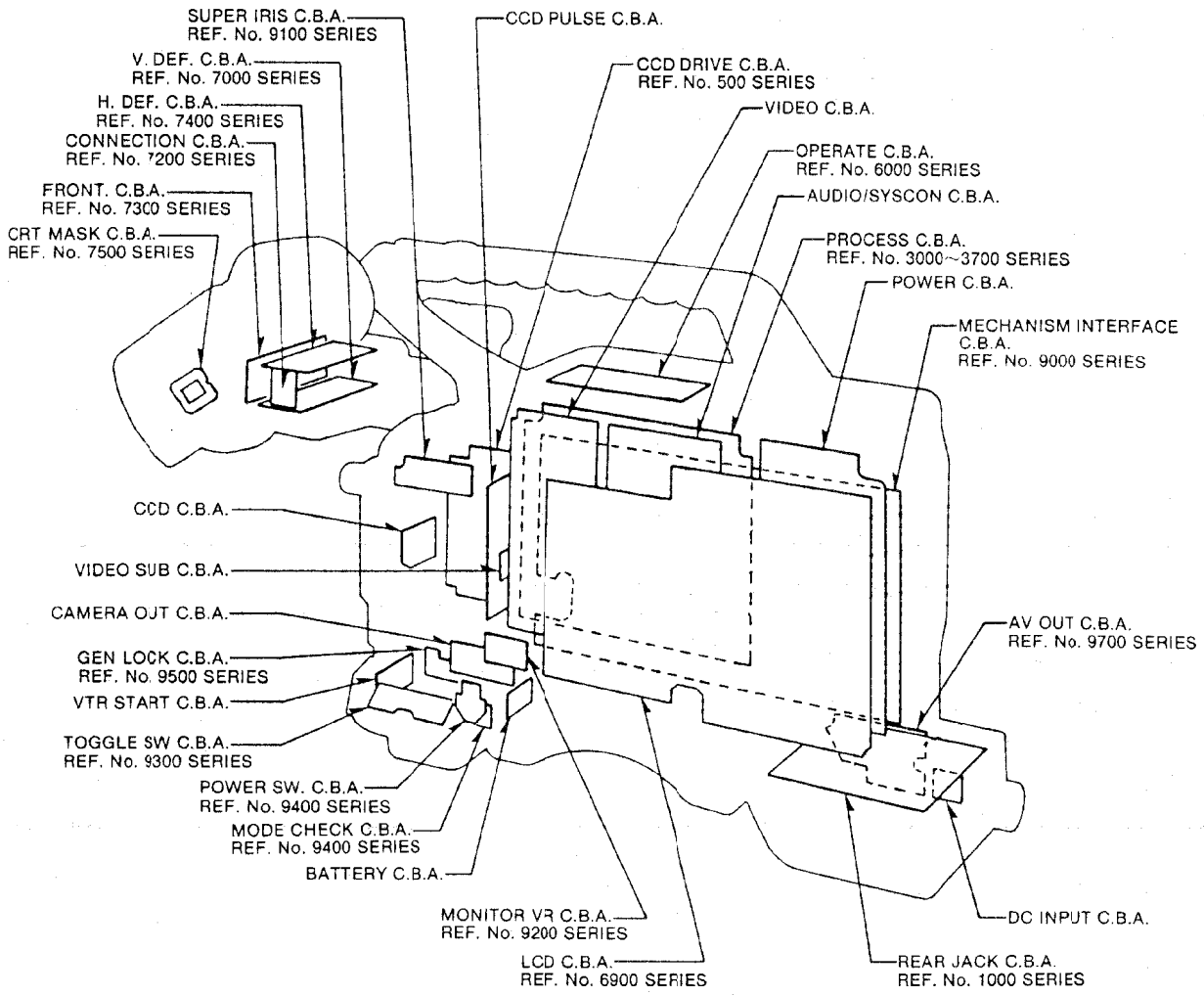

VIDEO C.A.B.

VIDEO 1 SECTION: REF. No. 3000/3200/8300 SERIES
VIDEO 2 SECTION: REF. No. 3000/3300 SERIES
CHROMA SECTION: REF. No. 8000/8100 SERIES
HEAD AMP SECTION: REF. No. 5000 SERIES
CNR SECTION: REF. No. 8300/8400 SERIES

POWER C.A.B.

POWER SECTION: REF. No. 1000 SERIES
DRIVE SECTION: REF. No. 2000 SERIES

AUDIO / SYSCON C.A.B.

SYSCON SERVO SECTION: REF. No. 6000 SERIES
SUB SYSCON SECTION: REF. No. 6500 SERIES
TIME CODE SECTION: REF. No. 6800 SERIES
NORMAL AUDIO SECTION: REF. No. 4000/4100/4200/4500 SERIES
FM AUDIO SECTION: REF. No. 4000/4300/4400/4600 SERIES
AUDIO AGC SECTION: REF. No. 4100/4200/4500/4700 SERIES

OVERALL SCHEMATIC DIAGRAM

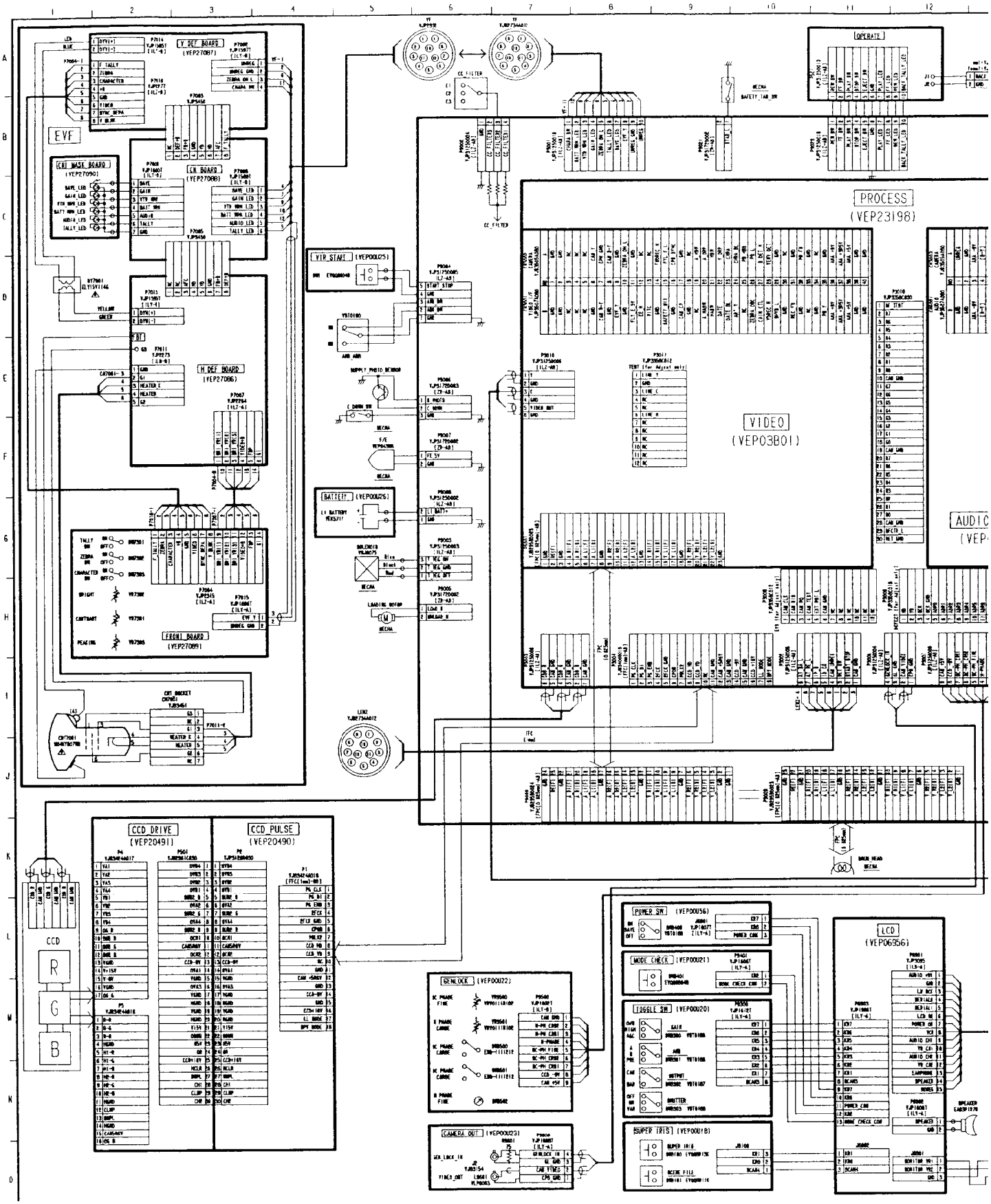

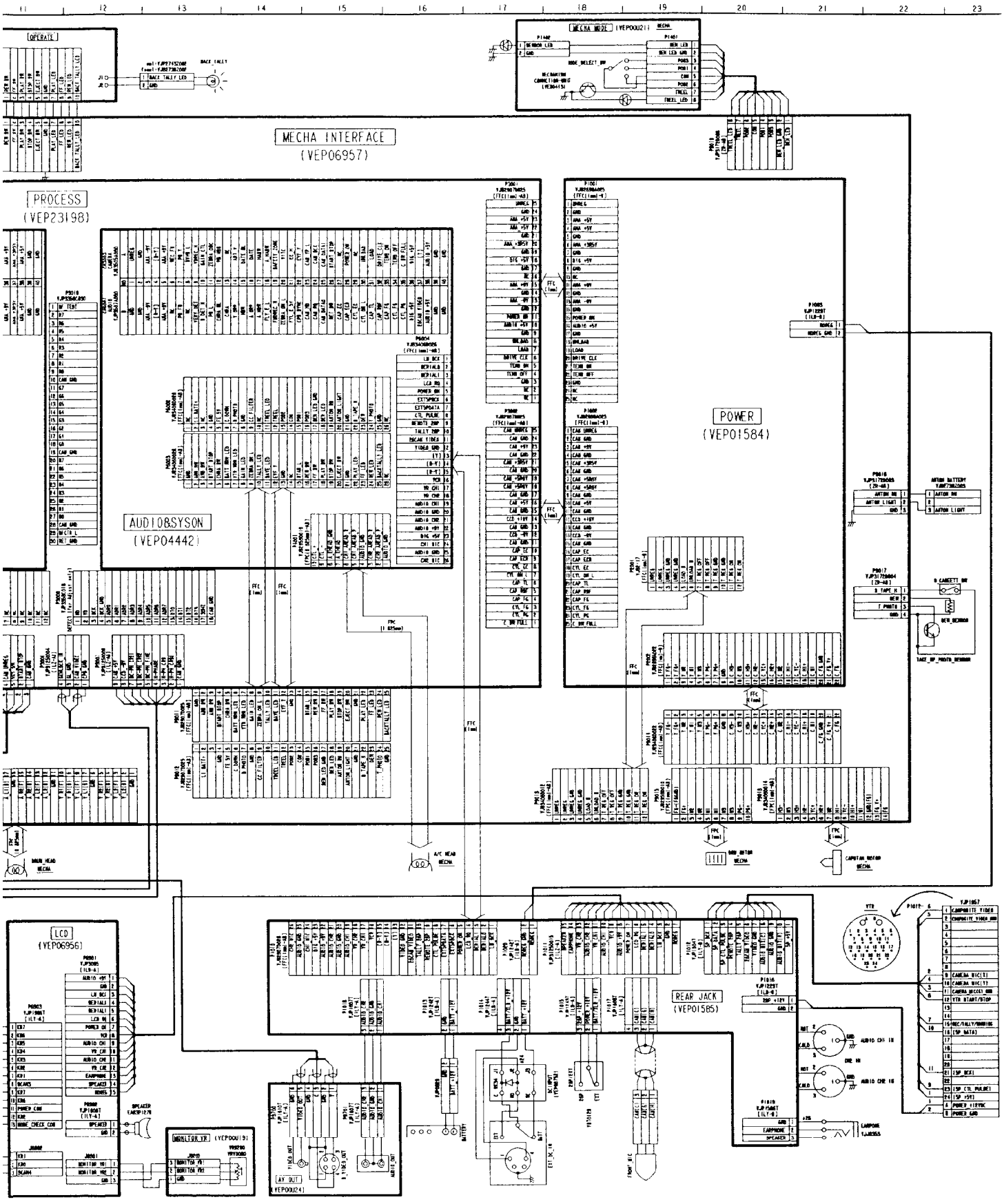
MECHA INTERFACE
(VEP06957)
PROCESS
(VEP23198)
AUDIO&SYSON
(VEP04442)
POWER
(VEP01584)
LCD
(VEP06956)
REAR JACK
(VEP01585)
MECHA MODE
OPERATE
MONITOR VR
AV OUT

MECHA INTERFACE SCHEMATIC DIAGRAM 1／1 (E14:Page CBA-3)

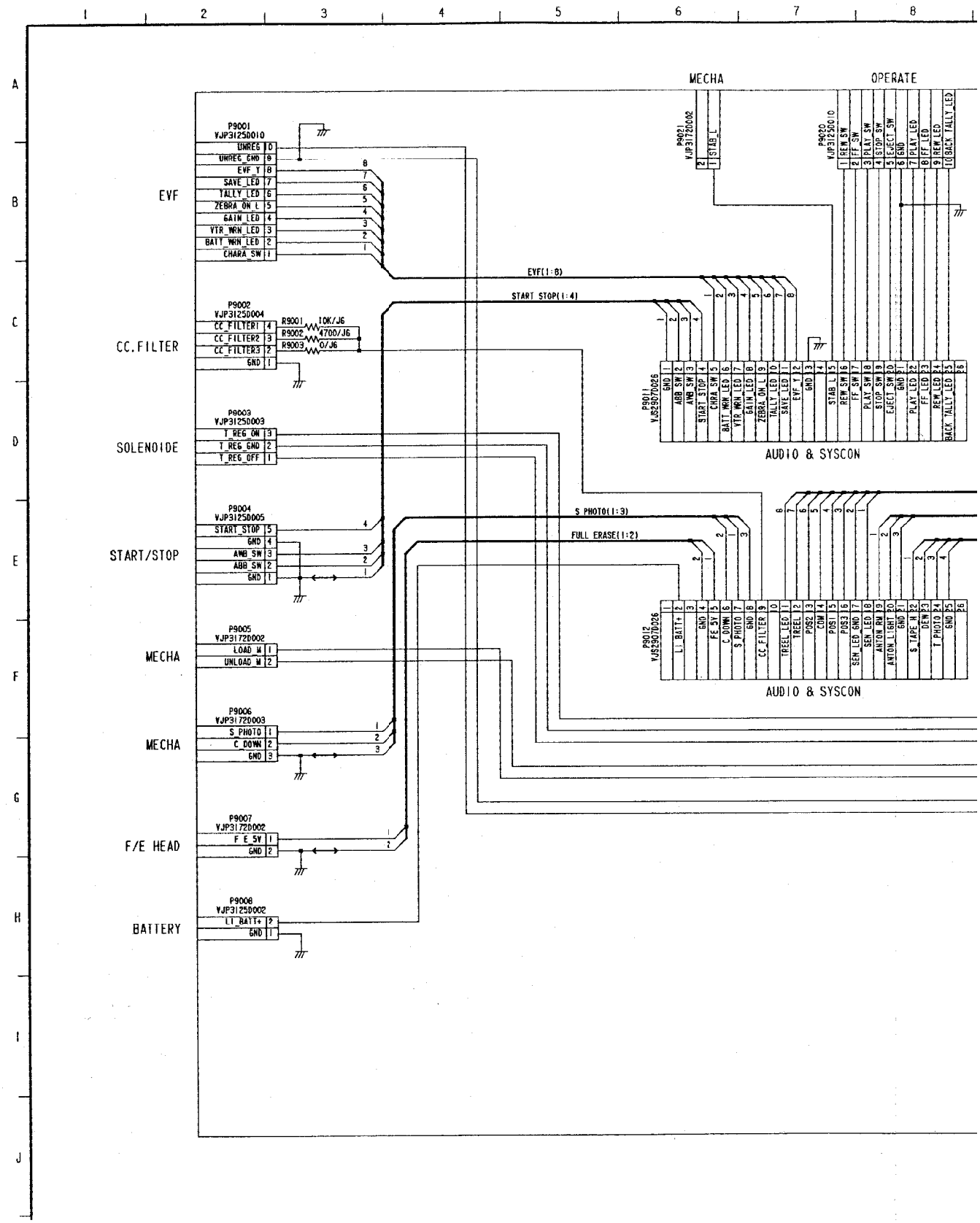

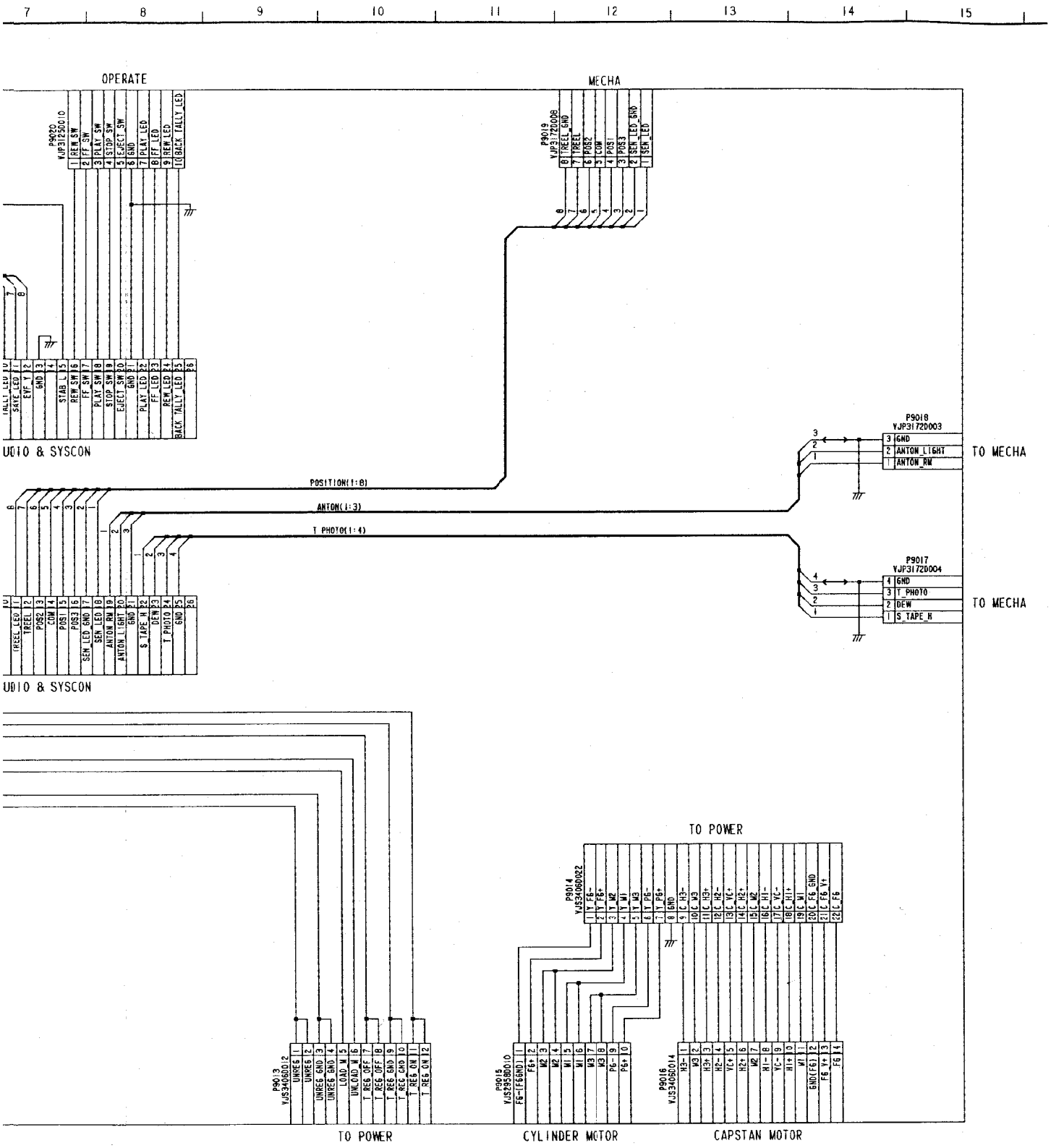
7
8
9
10
11
12
13
14
15
OPERATE
MECHA
P9020
VJP31250010
1 REW_SW
2 FF_SW
3 PLAY_SW
4 STOP_SW
5 EJECT_SW
6 GND
7 PLAY_LED
8 FF_LED
9 REW_LED
10 BACK_TALLY_LED
P9019
VJP31722008
8 TREEL_GND
7 TREEL
6 POS2
5 COM
4 POS1
3 POS3
2 SEN_LED_GND
1 SEN_LED
UDIO & SYSCON
P9018
VJP31722003
3 GND
2 ANTON_LIGHT
1 ANTON_RW
TO MECHA
POSITION(1:8)
ANTON(1:3)
T_PHOTO(1:4)
P9017
VJP31722004
4 GND
3 T_PHOTO
2 DEW
1 S_TAPE_H
TO MECHA
UDIO & SYSCON
TO POWER
P9014
VJS34060022
P9013
VJS34060012
P9015
VJS29580010
P9016
VJS34060014
TO POWER
CYLINDER MOTOR
CAPSTAN MOTOR

VIDEO 1 SCHEMATIC DIAGRAM 1／6（E11:Page CBA-4）

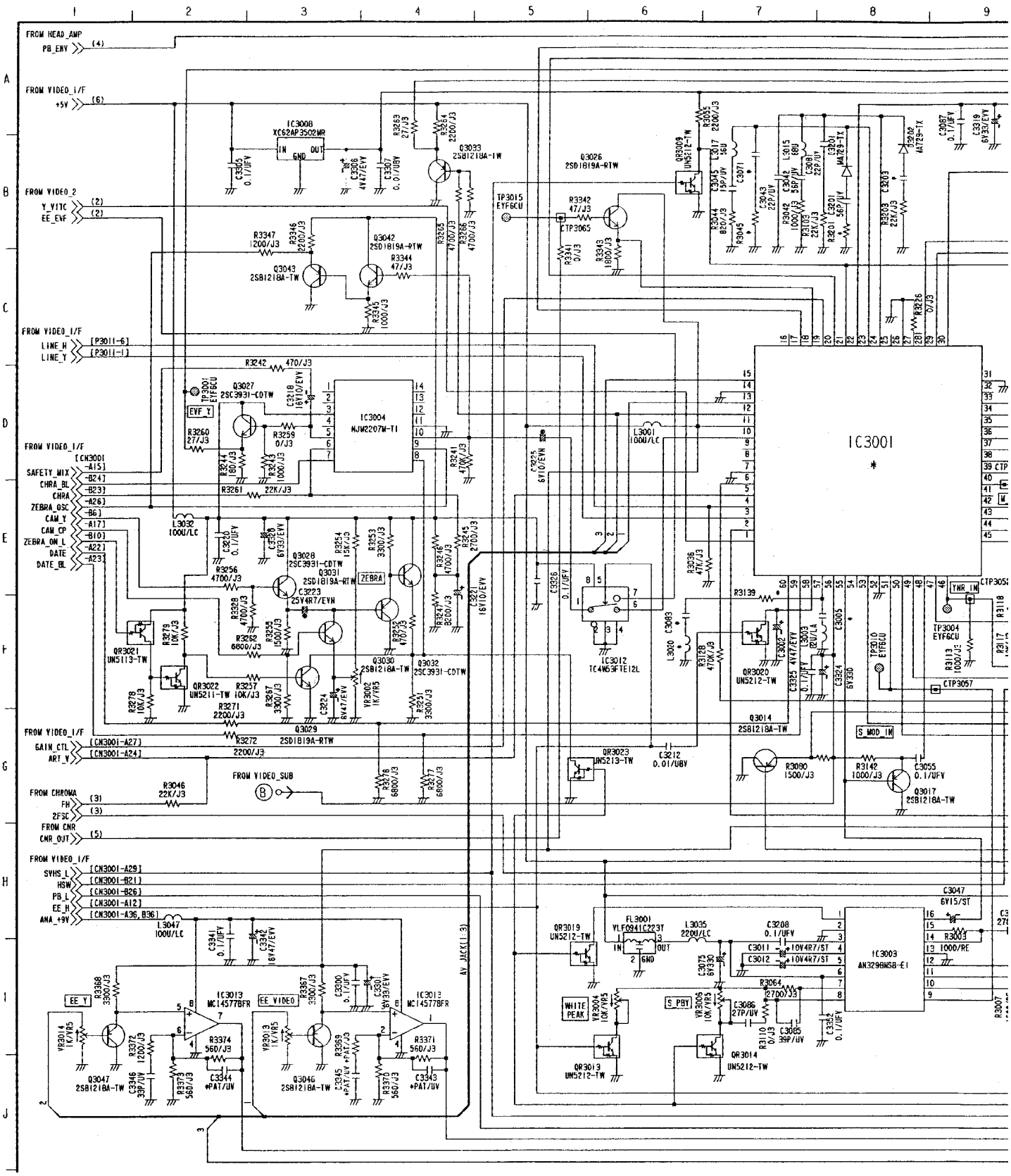

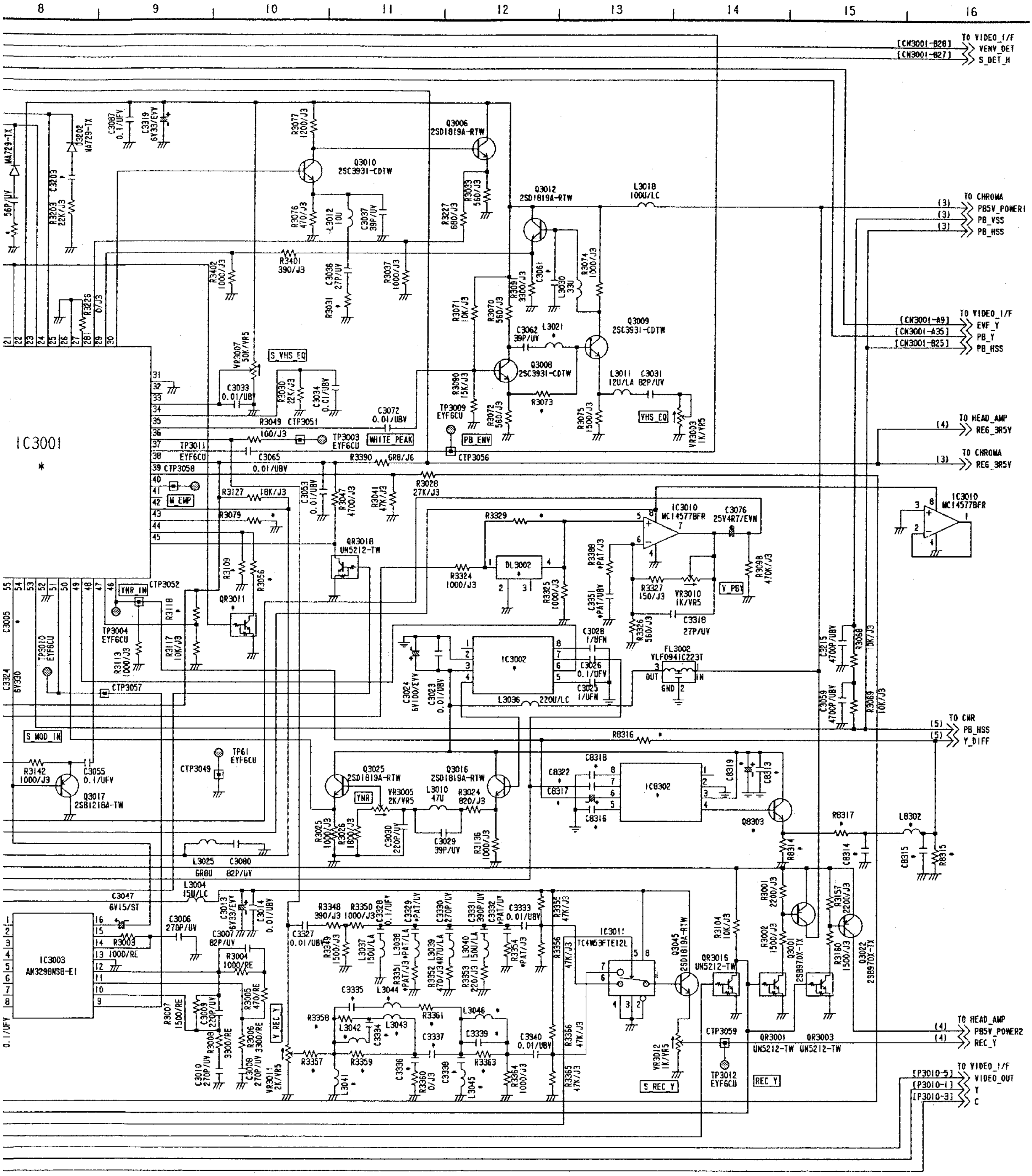

*=REFER TO THE COMPARISON CHART

VIDEO 2 SCHEMATIC DIAGRAM 2／6（E11:Page CBA-4）

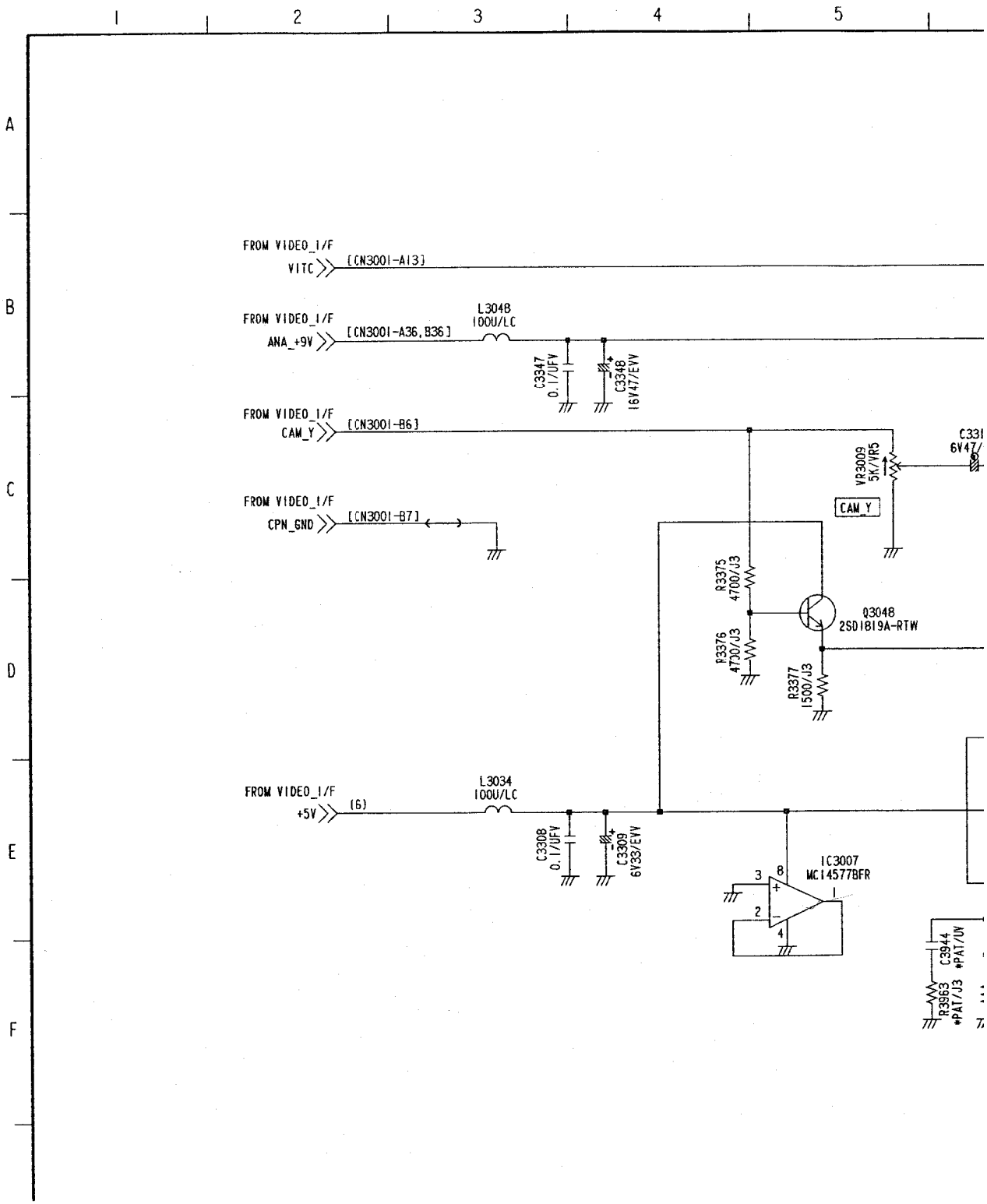

)

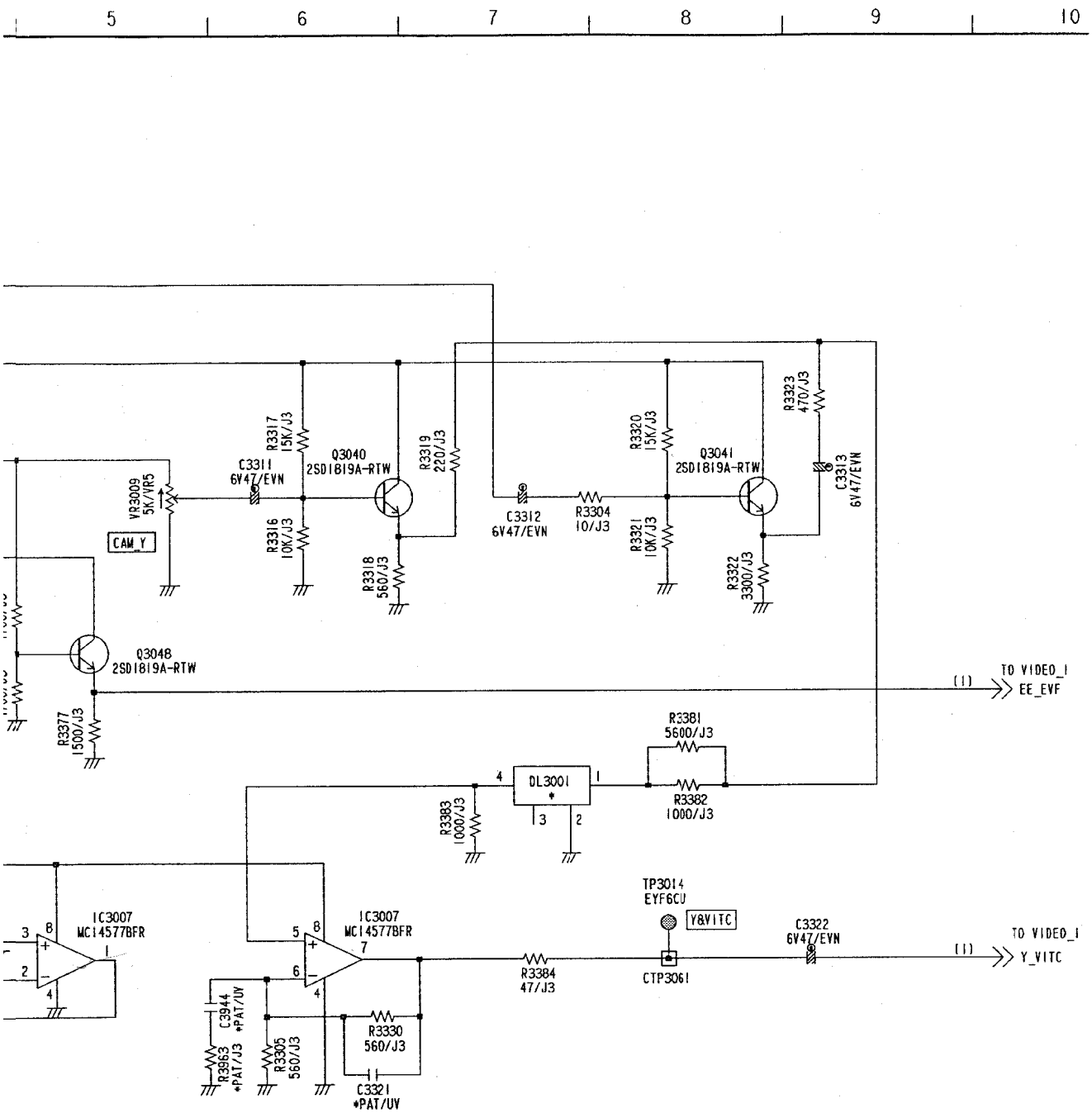
5
6
7
8
9
10
VR3009
5K/VR5
CAM_Y
C3311
6V47/EVN
R3317
15K/J3
Q3040
2SD1819A-RTW
R3316
10K/J3
R3318
560/J3
R3319
220/J3
C3312
6V47/EVN
R3304
10/J3
R3320
15K/J3
Q3041
2SD1819A-RTW
R3321
10K/J3
R3322
3300/J3
R3323
470/J3
C3313
6V47/EVN
Q3048
2SD1819A-RTW
R3377
1500/J3
TO VIDEO_I
EE_EVF
R3381
5600/J3
R3382
1000/J3
DL3001
R3383
1000/J3
IC3007
MC14577BFR
IC3007
MC14577BFR
TP3014
EYF6CU
Y&VITC
CTP3061
C3322
6V47/EVN
TO VIDEO_I
Y_VITC
R3384
47/J3
C3944
*PAT/UV
R3963
*PAT/J3
R3305
560/J3
R3330
560/J3
C3321
*PAT/UV

CHROMA SCHEMATIC DIAGRAM 3／6（E11:Page CBA-4）

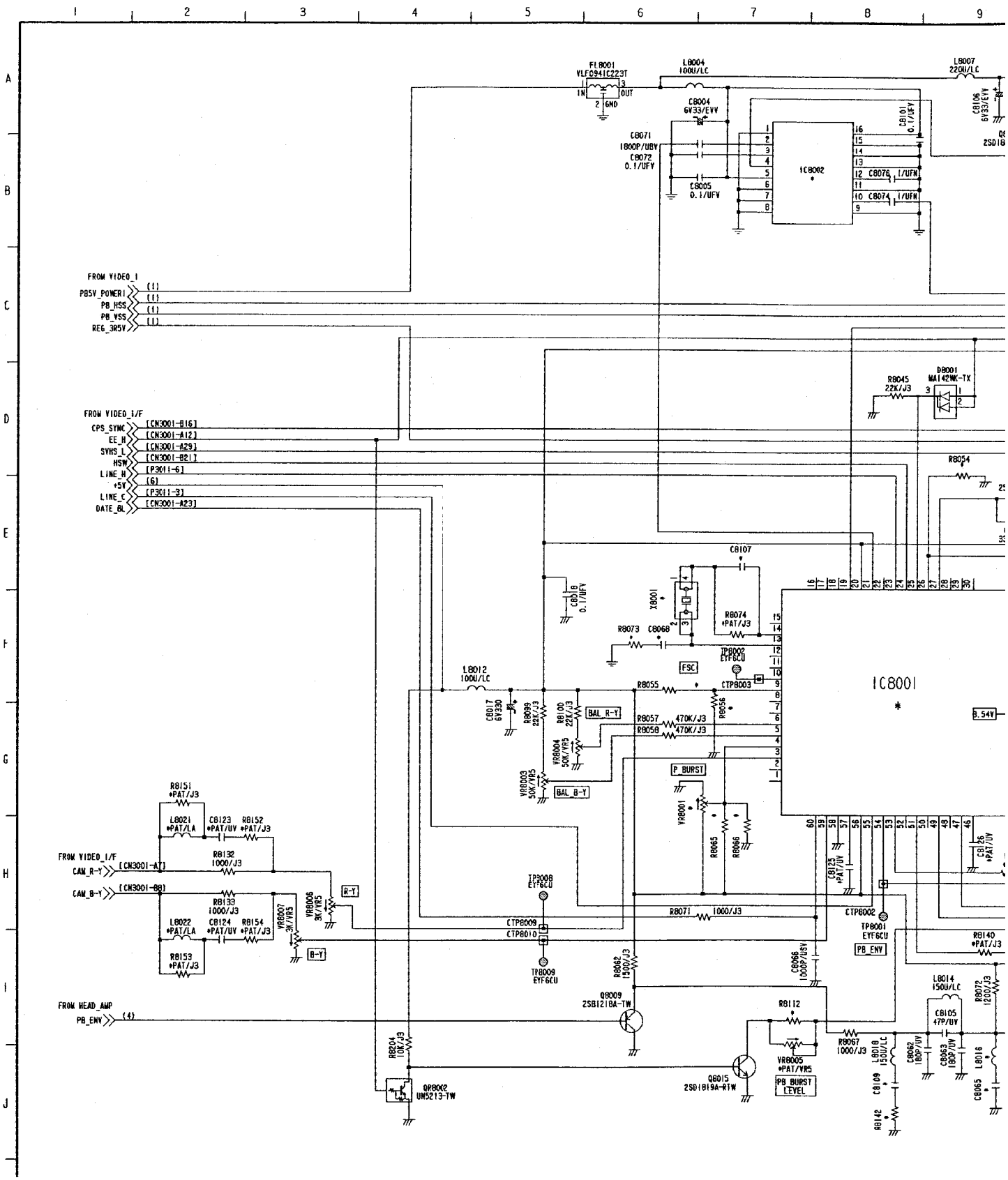

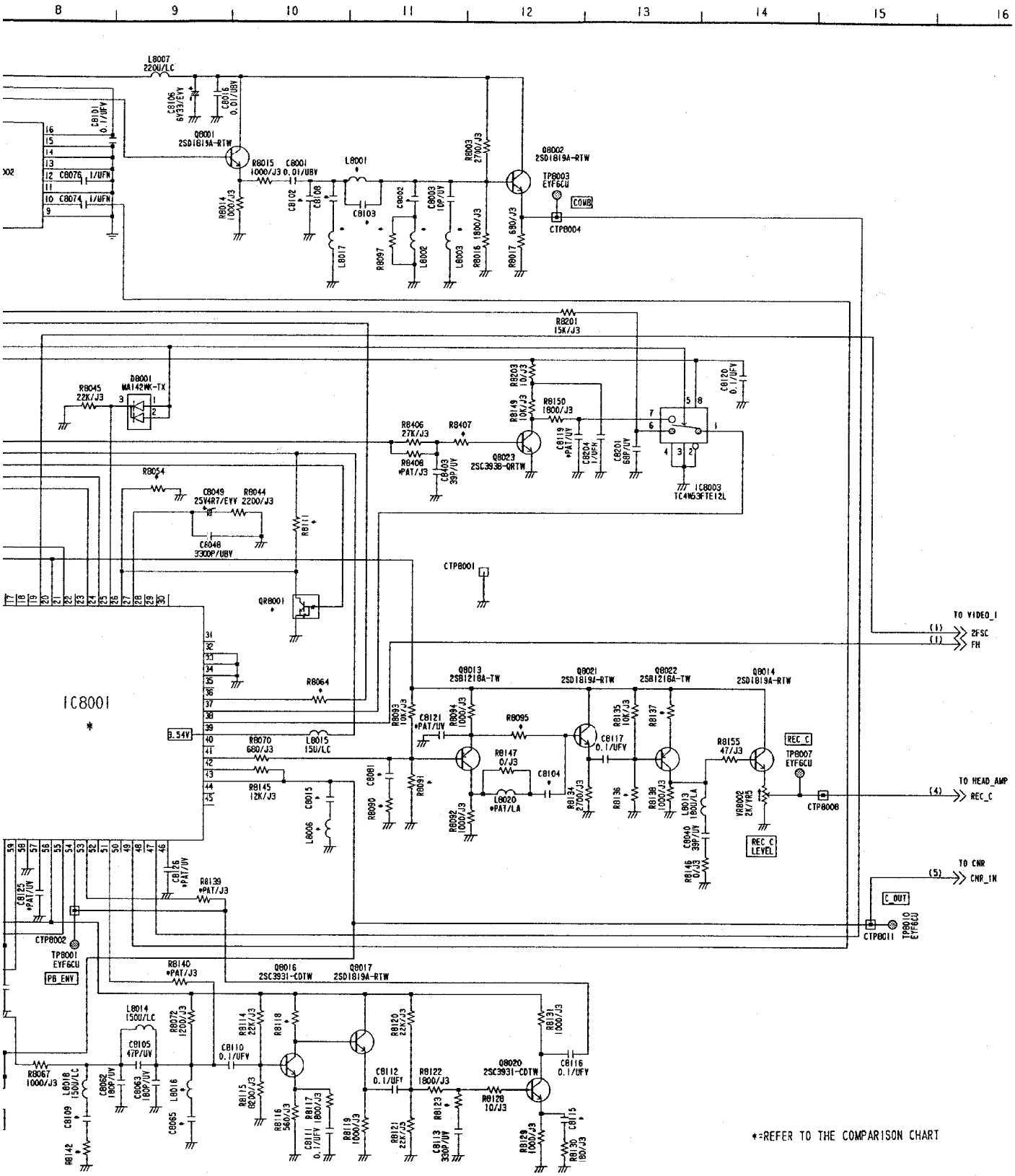
8
9
10
11
12
13
14
15
16
IC8001
*
TO VIDEO_I
2FSC
FH
TO HEAD_AMP
REC_C
TO CNR
CNR_IN
C_OUT
COMB
PB ENV
REC_C LEVEL
*=REFER TO THE COMPARISON CHART

HEAD AMP SHEMATIC DIAGRAM 4／6（E11:Page CBA-4）

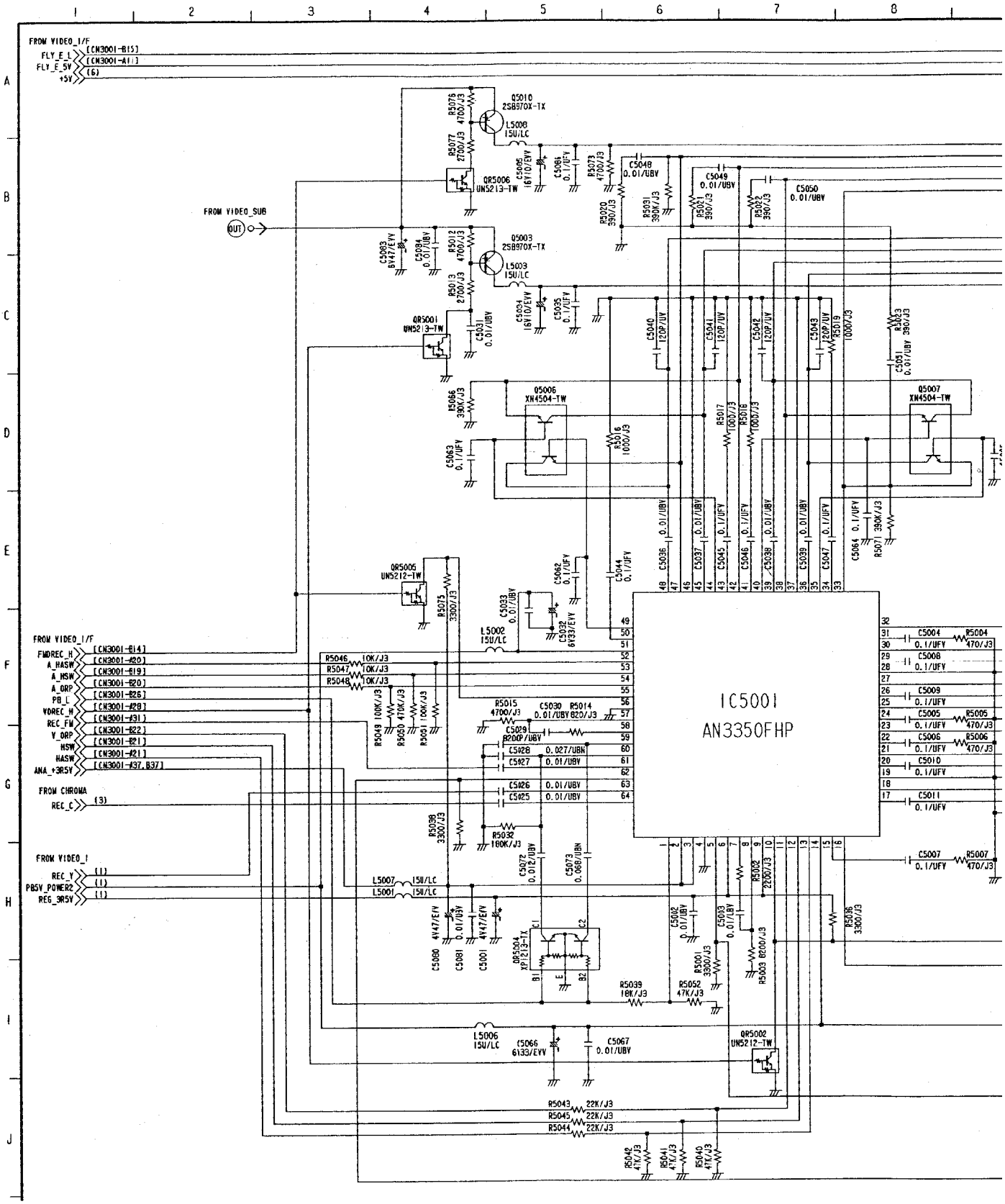

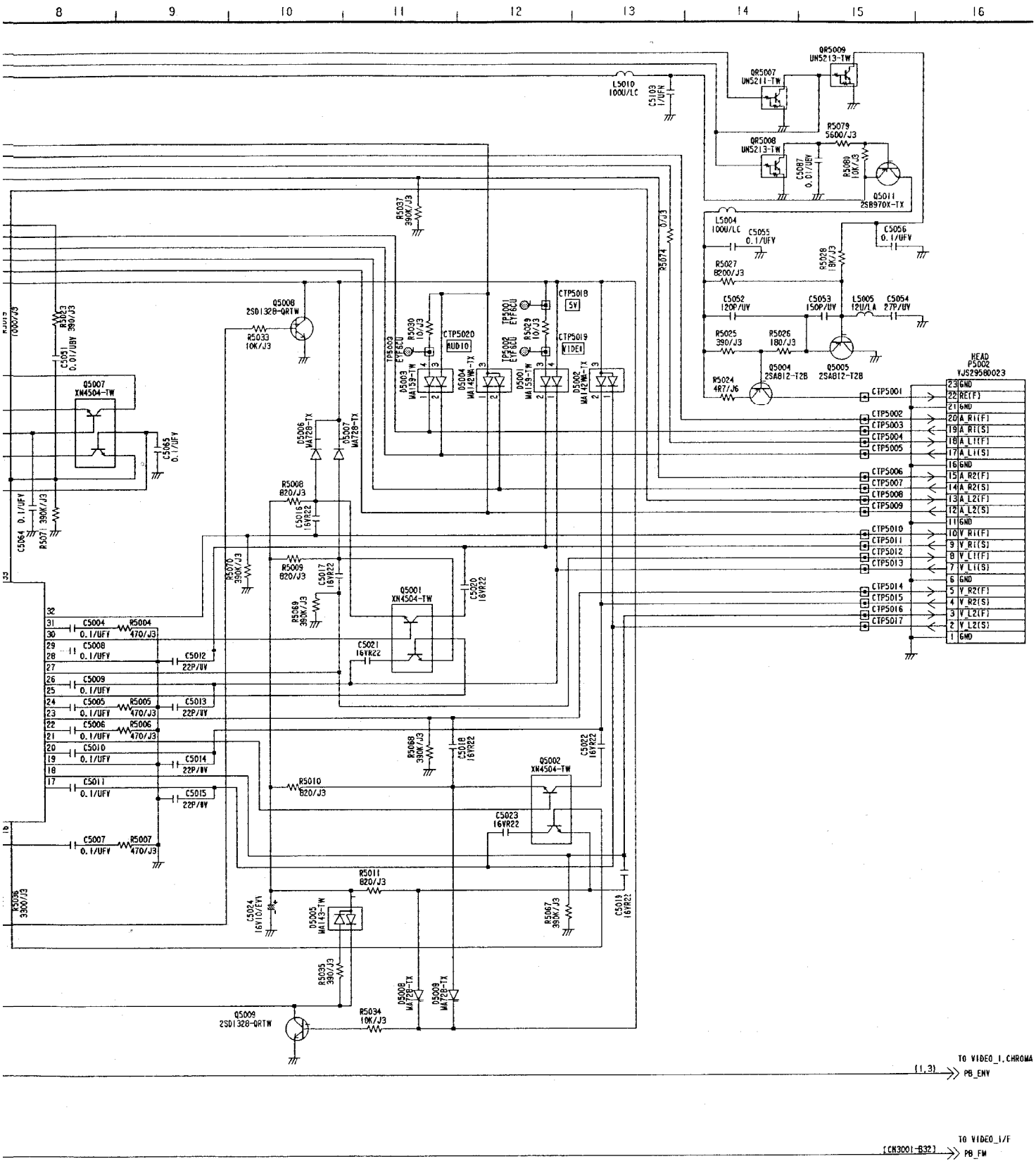
8
9
10
11
12
13
14
15
16
L5010 1000/LC
C5103 1/UFN
QR5009 UN5213-TW
QR5007 UN5211-TW
QR5008 UN5213-TW
R5079 5600/J3
C5087 0.01/UBV
R5080 10K/J3
Q5011 2SB970X-TX
L5004 1000/LC
C5055 0.1/UFV
C5056 0.1/UFV
R5028 18K/J3
R5027 8200/J3
C5052 120P/UV
C5053 150P/UV
L5005 12U/LA
C5054 27P/UV
R5025 390/J3
R5026 180/J3
Q5004 2SA812-T2B
Q5005 2SA812-T2B
R5024 487/J6
R5074 0/J3
R5037 390K/J3
R5033 390/J3
C5061 0.01/UBV
Q5008 2SD1328-QRTW
R5033 10K/J3
Q5007 XN4504-TW
C5065 0.1/UFV
C5064 0.1/UFV
R5071 390K/J3
TP5003 ETF6CU
R5030 10/J3
CTP5020 AUDIO
TP5002 ETF6CU
R5029 10/J3
CTP5018 5V
CTP5019 VIDEO
Q5003 MA142WA-TX
Q5004 MA142WA-TX
Q5001 MA159-TW
Q5002 MA142WA-TX
D5006 MA728-TX
D5007 MA728-TX
R5008 820/J3
C5016 16VR22
R5070 390K/J3
R5009 820/J3
C5017 16VR22
R5069 390K/J3
Q5001 XN4504-TW
C5020 16VR22
C5021 16VR22
C5004 0.1/UFV
R5004 470/J3
C5008 0.1/UFV
C5012 22P/8V
C5009 0.1/UFV
C5005 0.1/UFV
R5005 470/J3
C5013 22P/8V
C5006 0.1/UFV
R5006 470/J3
C5010 0.1/UFV
C5014 22P/8V
C5011 0.1/UFV
C5015 22P/8V
C5007 0.1/UFV
R5007 470/J3
R5068 390K/J3
C5018 16VR22
C5022 16VR22
Q5002 XN4504-TW
R5010 820/J3
C5023 16VR22
R5011 820/J3
C5024 16V10/EVY
D5005 MA143-TW
R5067 390K/J3
C5019 16VR22
R5035 390/J3
D5008 MA728-TX
D5009 MA728-TX
Q5009 2SD1328-QRTW
R5034 10K/J3
HEAD P5002 YJS29580023
CTP5001
CTP5002
CTP5003
CTP5004
CTP5005
CTP5006
CTP5007
CTP5008
CTP5009
CTP5010
CTP5011
CTP5012
CTP5013
CTP5014
CTP5015
CTP5016
CTP5017
23 GND
22 RE(F)
21 GND
20 A_R1(F)
19 A_R1(S)
18 A_L1(F)
17 A_L1(S)
16 GND
15 A_R2(F)
14 A_R2(S)
13 A_L2(F)
12 A_L2(S)
11 GND
10 V_R1(F)
9 V_R1(S)
8 V_L1(F)
7 V_L1(S)
6 GND
5 Y_R2(F)
4 Y_R2(S)
3 V_L2(F)
2 V_L2(S)
1 GND
TO VIDEO_I.CHROMA
(1,3)
PB_ENV
TO VIDEO_I/F
(CN3001-B32)
PB_FW

CNR SCHEMATIC DIAGRAM 5／6（E11:Page CBA-4）

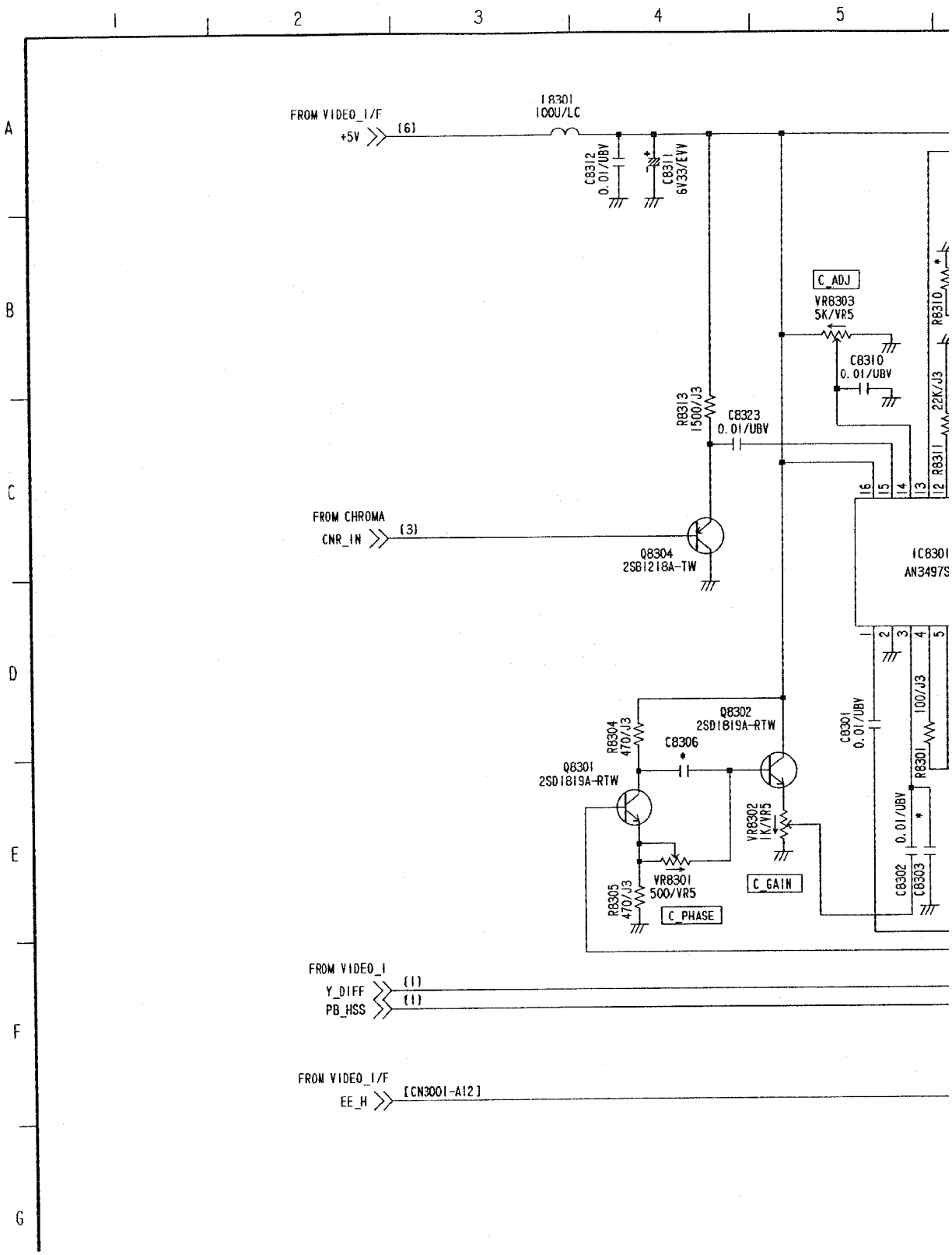

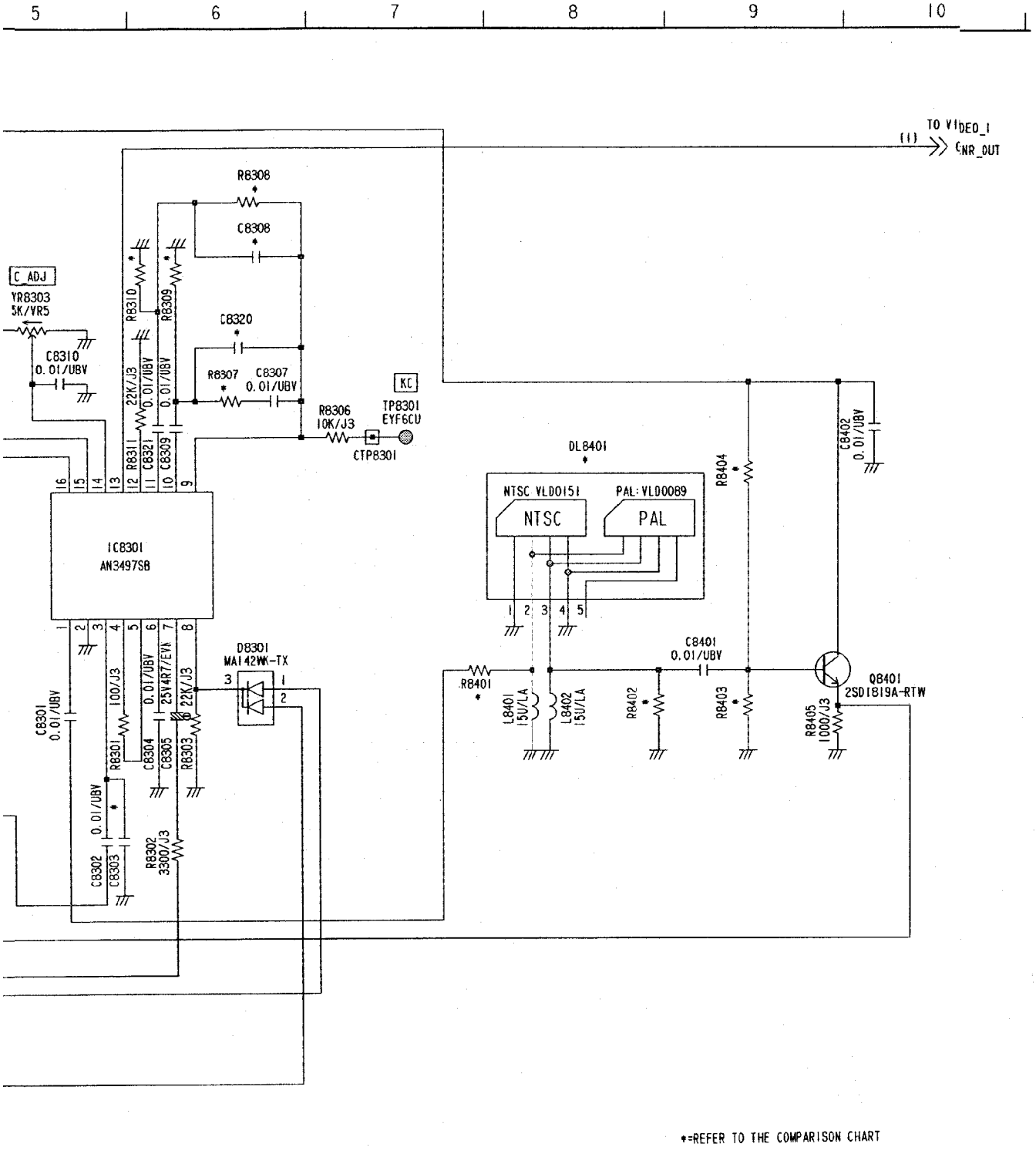

*=REFER TO THE COMPARISON CHART

VIDEO I／F SCHEMATIC DIAGRAM 6／6 (E11:Page CBA-4)

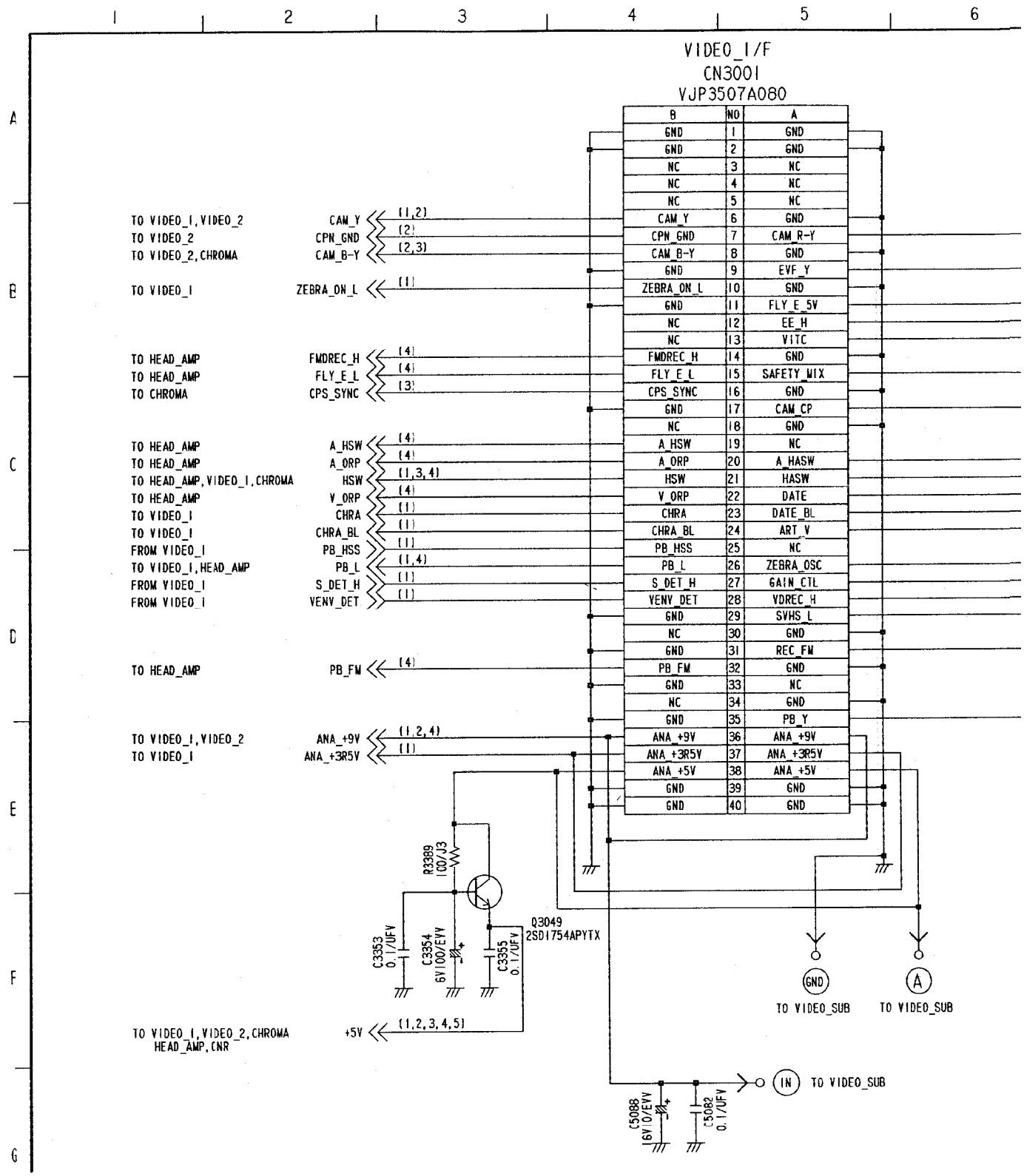

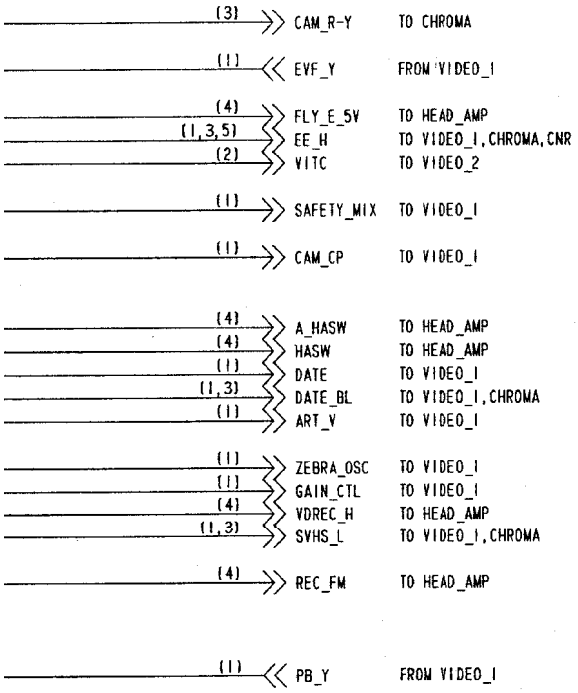
(3) CAM_R-Y TO CHROMA
(1) EVF_Y FROM VIDEO_I
(4) FLY_E_5V TO HEAD_AMP
(1,3,5) EE_H TO VIDEO_I,CHROMA,CNR
(2) VITC TO VIDEO_2
(1) SAFETY_MIX TO VIDEO_I
(1) CAM_CP TO VIDEO_I
(4) A_HASW TO HEAD_AMP
(4) HASW TO HEAD_AMP
(1) DATE TO VIDEO_I
(1,3) DATE_BL TO VIDEO_I,CHROMA
(1) ART_V TO VIDEO_I
(1) ZEBRA_OSC TO VIDEO_I
(1) GAIN_CTL TO VIDEO_I
(4) VDREC_H TO HEAD_AMP
(1,3) SVHS_L TO VIDEO_I,CHROMA
(4) REC_FM TO HEAD_AMP
(1) PB_Y FROM VIDEO_I

A
EO_SUB

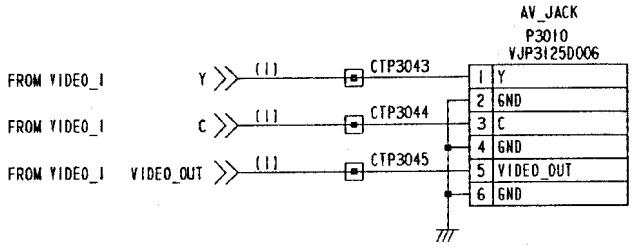
AV_JACK
P3010
VJP3125D006
FROM VIDEO_I Y (1) CTP3043
FROM VIDEO_I C (1) CTP3044
FROM VIDEO_I VIDEO_OUT (1) CTP3045
1 Y
2 GND
3 C
4 GND
5 VIDEO_OUT
6 GND

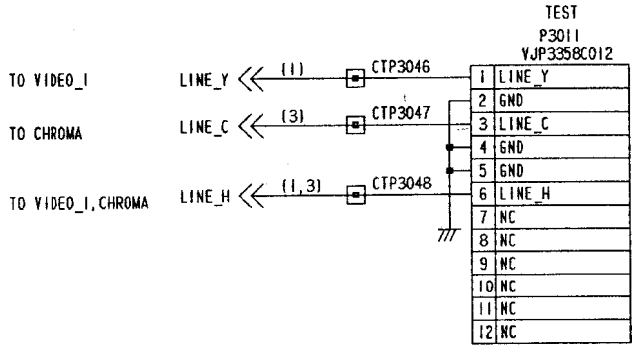
TEST
P3011
VJP3358C012
TO VIDEO_I LINE_Y (1) CTP3046
TO CHROMA LINE_C (3) CTP3047
TO VIDEO_I,CHROMA LINE_H (1,3) CTP3048
1 LINE_Y
2 GND
3 LINE_C
4 GND
5 GND
6 LINE_H
7 NC
8 NC
9 NC
10 NC
11 NC
12 NC

VIDEO COMPARISON CHART

REF	NTSC	PAL	REF	NTSC	PAL	REF	NTSC
C3005	22P/UV	15P/UV	C8318	*PAT	1/UFN	R3357	330/J
C3061	12P/UV	15P/UV	C8319	*PAT/EVV	6V33/EVV	R3358	680/J
C3071	68P/UV	82P/UV	C8320	10P/UV	18P/UV	R3359	*PAT/J
C3083	18P/UV	*PAT/UV	C8322	*PAT/UBV	0.01/UBV	R3361	470/J
C3203	82P/UV	68P/UV	DL3001	ELB4C561	ELB4C560	R3363	*PAT/J
C3321	*PAT/UV	*PAT/UV	DL3002	ELB4D553	*PAT	R3369	*PAT/J
C3329	*PAT/UV	*PAT/UV	DL8401	VLD0151	VLD0089	R3388	*PAT/J
C3332	*PAT/UV	*PAT/UV	IC3001	VEFH25C	VEFH25D	R3963	*PAT/J
C3334	15P/UV	*PAT/UV	IC3002	TL8837FEL	TL8819FEL	R8054	0/J3
C3335	0.01/UBV	*PAT/UBV	IC8001	VEFH26E	VEFH26B	R8055	120K/J
C3336	68P/UV	39P/UV	IC8002	TL8832FTP1	TL8833FTP1	R8056	8200/J
C3337	270P/UV	82P/UV	IC8302	*PAT	TL8819FEL	R8064	*PAT/J
C3338	0/J3	180P/UV	L3020	82U/LA	*PAT/LA	R8065	*PAT/J
C3339	220P/UV	*PAT/UV	L3021	33U	39U	R8066	*PAT/J
C3343	*PAT/UV	*PAT/UV	L3038	*PAT/LA	*PAT/LA	R8073	6800/J
C3344	*PAT/UV	*PAT/UV	L3041	*PAT/LA	82U/LA	R8074	*PAT/J
C3345	*PAT/UV	*PAT/UV	L3042	39U	*PAT	R8090	1000/J
C3351	*PAT/UV	*PAT/UV	L3043	33U	*PAT	R8091	22K/J
C3944	*PAT/UV	*PAT/UV	L3044	220U/LA	*PAT/LA	R8095	330/J
C8002	39P/UV	6P/UV	L3045	82U/LA	150U/LA	R8097	0/J3
C8015	150P/UV	0.1/UFV	L3046	220U/LA	*PAT/LA	R8111	*PAT/J
C8065	0.1/UFN	1/UFN	L8001	39U	27U	R8112	4700/J
C8068	0.01/UBV	*PAT/UBV	L8002	*PAT	10U	R8118	1000/J
C8081	82P/UV	220P/UV	L8003	6R8U	10U	R8123	1500/J
C8102	39P/UV	33P/UV	L8006	82U	33U	R8136	22K/J
C8103	3P/UV	12P/UV	L8016	470U/LB	820U/LB	R8137	390/J
C8104	330P/UV	390P/UV	L8017	*PAT/LC	*PAT/LC	R8139	*PAT/J
C8107	100P/UV	47P/UV	L8020	*PAT/LA	*PAT/LA	R8140	*PAT/J
C8108	*PAT/UV	*PAT/UV	L8021	*PAT/LA	*PAT/LA	R8142	1000/J
C8109	68P/UV	82P/UV	L8022	*PAT/LA	*PAT/LA	R8151	*PAT/J
C8115	0.01/UBV	0.1/UFV	L8302	*PAT/LA	100U/LA	R8152	*PAT/J
C8119	*PAT/UV	*PAT/UV	Q8303	*PAT	2SD1819A-RTW	R8153	*PAT/J
C8121	*PAT/UV	*PAT/UV	QR3011	*PAT	UN5212-TW	R8154	*PAT/J
C8123	*PAT/UV	*PAT/UV	QR8001	*PAT	UN5212-TW	R8201	*PAT
C8124	*PAT/UV	*PAT/UV	R3031	390/J3	150/J3	R8202	*PAT/J
C8125	*PAT/UV	*PAT/UV	R3045	22K/J3	8200/J3	R8307	680/J
C8126	*PAT/UV	*PAT/UV	R3056	*PAT/J3	1000/J3	R8308	1000/J
C8201	*PAT	68P	R3073	1500/J3	1200/J3	R8309	2200/J
C8303	*PAT/UV	120P/UV	R3079	470/J3	220/J3	R8310	560/J
C8306	270P/UV	470P/UV	R3109	470/J3	1800/J3	R8314	*PAT/J
C8308	18P/UV	33P/UV	R3118	*PAT/J3	10K/J3	R8315	*PAT/J
C8313	*PAT/UBV	0.01/UBV	R3139	0/J3	*PAT/J3	R8316	0/J3
C8314	*PAT/UV	82P/UV	R3201	5600/J3	33K/J3	R8317	*PAT/J
C8315	*PAT/UV	18P/UV	R3329	*PAT/J3	0/J3	R8401	560/J
C8316	*PAT	1/UFN	R3351	*PAT/J3	*PAT/J3	R8402	560/J
C8317	*PAT	10V4R7/ST	R3354	*PAT/J3	*PAT/J3	R8403	27K/J

REF	NTSC
R8404	18K/J
R8407	12K/J
R8408	*PAT/J
VR8001	*PAT/V
VR8005	*PAT/V
X8001	VSX037

VIDEO SUB SCHEMATIC DIAGRAM
(E12:Page CBA-4)

	NTSC	PAL
	330/J3	1000/J3
	680/J3	*PAT/J3
	*PAT/J3	0/J3
	470/J3	*PAT/J3
	*PAT/J3	0/J3
	*PAT/J3	*PAT/J3
	*PAT/J3	*PAT/J3
	*PAT/J3	*PAT/J3
	0/J3	4700/J3
	120K/J3	*PAT/J3
	8200/J3	*PAT/J3
	*PAT/J3	0/J3
	*PAT/J3	*PAT/J3
	*PAT/J3	*PAT/J3
	6800/J3	*PAT/J3
	*PAT/J3	*PAT/J3
	1000/J3	2200/J3
	22K/J3	15K/J3
	330/J3	390/J3
	0/J3	*PAT/J3
	*PAT/J3	4700/J3
	4700/J3	*PAT/J3
	1000/J3	1500/J3
	1500/J3	560/J3
	22K/J3	15K/J3
	390/J3	680/J3
	*PAT/J3	*PAT/J3
	*PAT/J3	*PAT/J3
	1000/J3	1500/J3
	*PAT/J3	*PAT/J3
	*PAT/J3	*PAT/J3
	*PAT/J3	*PAT/J3
	*PAT/J3	*PAT/J3
	*PAT	15K
	*PAT/J3	*PAT/J3
	680/J3	1200/J3
	1000/J3	1500/J3
	2200/J3	680/J3
	560/J3	1000/J3
	*PAT/J3	1000/J3
	*PAT/J3	2200/J3
	0/J3	*PAT/J3
	*PAT/J3	470/J3
	560/J3	270/J3
	560/J3	1200/J3
	27K/J3	10K/J3

	NTSC	PAL
	18K/J3	10K/J3
	12K/J3	15K/J3
	*PAT/J3	*PAT/J3
1	*PAT/VR5	50K/VR5
5	*PAT/VR5	*PAT/VR5
	VSX0375	VSX0419

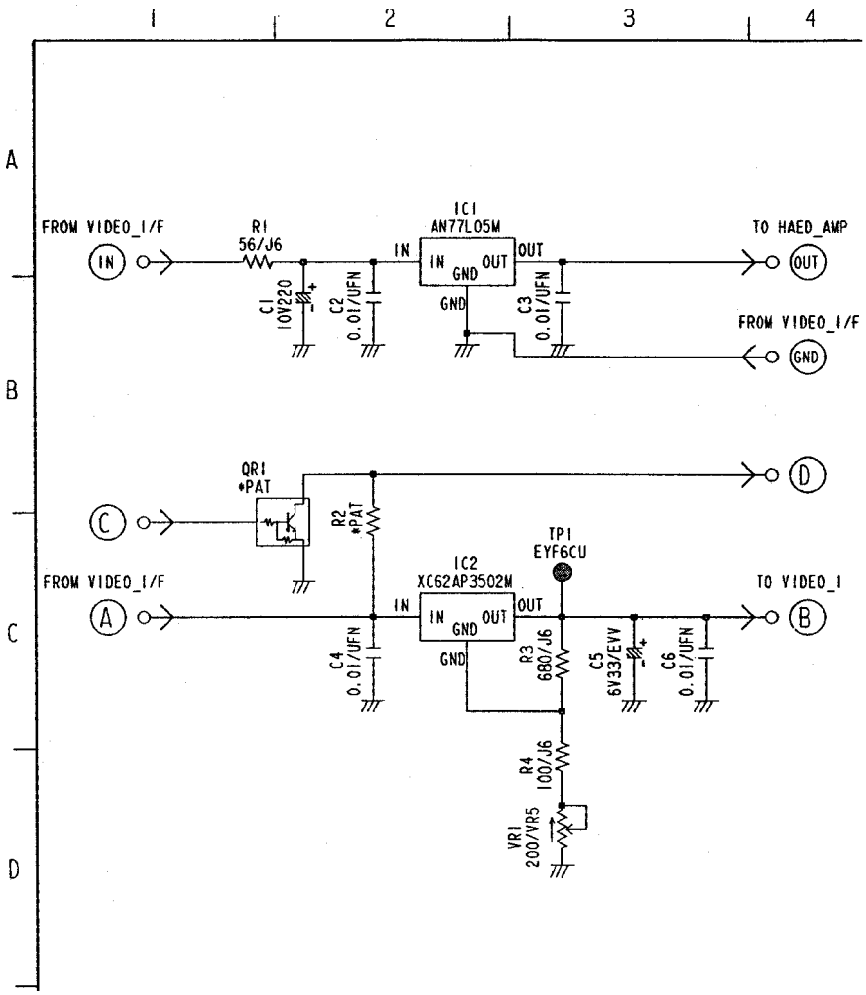

SYSCON／SERVO SCHEMATIC DIAGRAM 1／8 (E13:Page CBA-7)

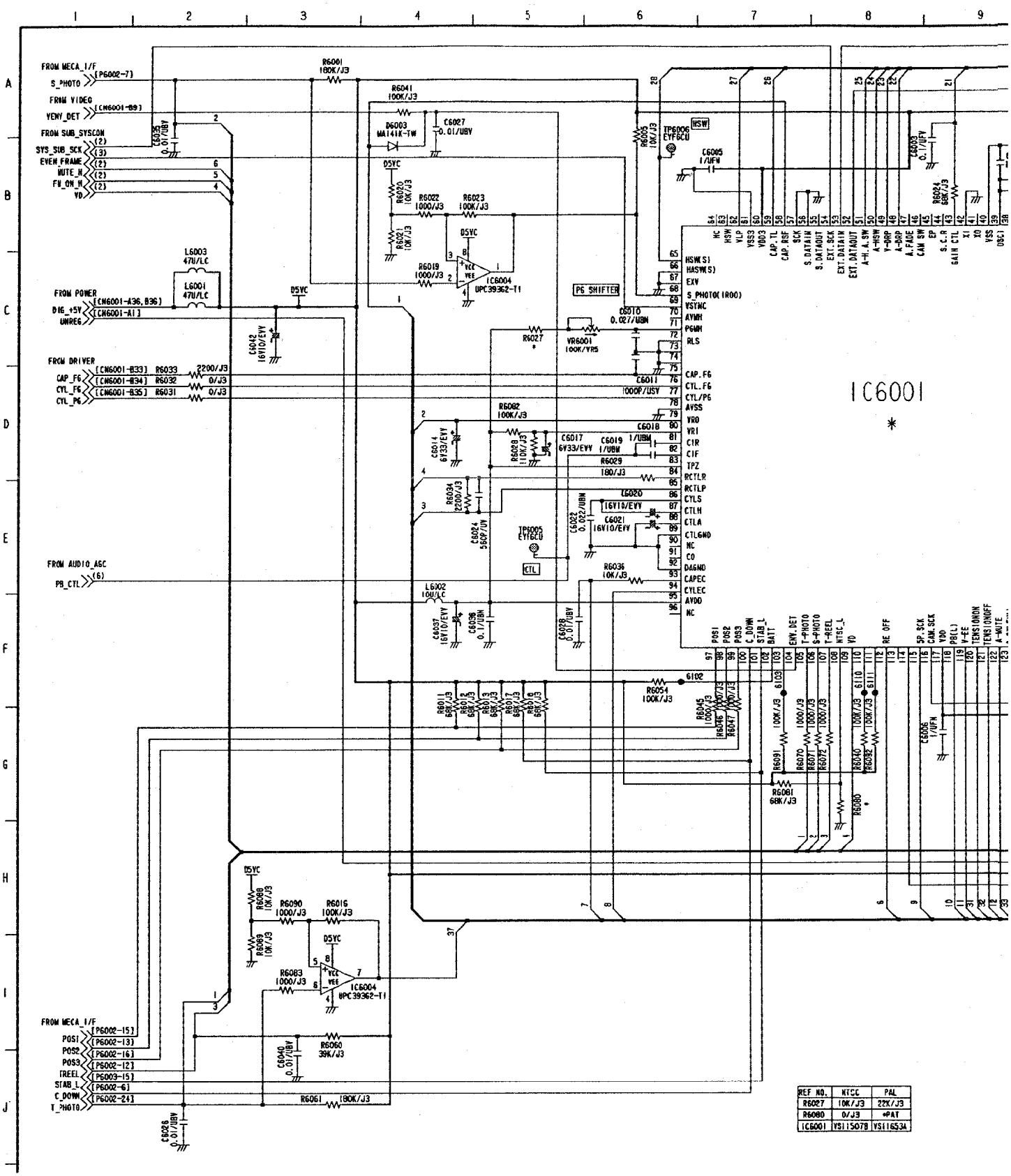

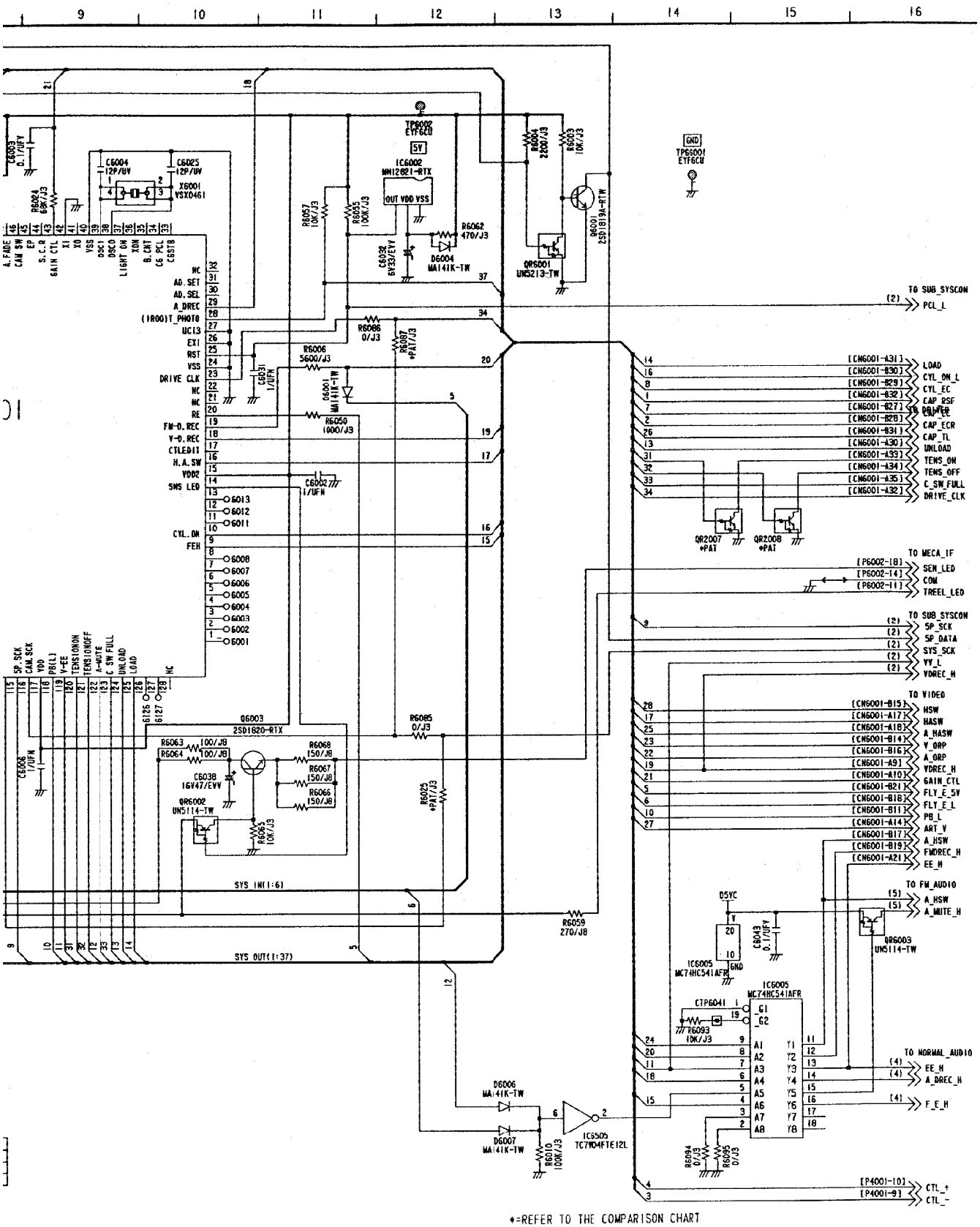
9
10
11
12
13
14
15
16
TO SUB_SYSCON
PCL_L
TO MECA_IF
SEN_LED
COM
TREEL_LED
TO SUB_SYSCON
SP_SCK
SP_DATA
SYS_SCK
VV_L
VDREC_H
TO VIDEO
HSW
HASW
A_HASW
V_ORP
A_ORP
VDREC_H
GAIN_CTL
FLY_E_5V
FLY_E_L
PB_L
ART_V
A_HSW
FWDREC_H
EE_H
TO FM_AUDIO
A_HSW
A_MUTE_H
TO NORMAL_AUDIO
EE_H
A_DREC_H
F_E_H
CTL_+
CTL_-
LOAD
CYL_ON_L
CYL_EC
CAP_RSF
CAP_ECR
CAP_TL
UNLOAD
TENS_ON
TENS_OFF
C_SW_FULL
DRIVE_CLK
SYS_IN(1:6)
SYS_OUT(1:37)
IC6002
MN12821-RTX
IC6005
MC74HC541AFR
IC6506
TC7WD4FTE12L
Q6003
2SD1820-RTX
QR6002
UN5114-TW
QR6003
UN5114-TW
QR6001
UN5213-TW
QR2007
QR2008
D6004
MA141K-TW
D6006
MA141K-TW
D6007
MA141K-TW
X6001
VSX0461
TP6002
TP6001
5V
GND
*=REFER TO THE COMPARISON CHART

SUB SYSCON SCHEMATIC DIAGRAM 2／8（E13:Page CBA-7）

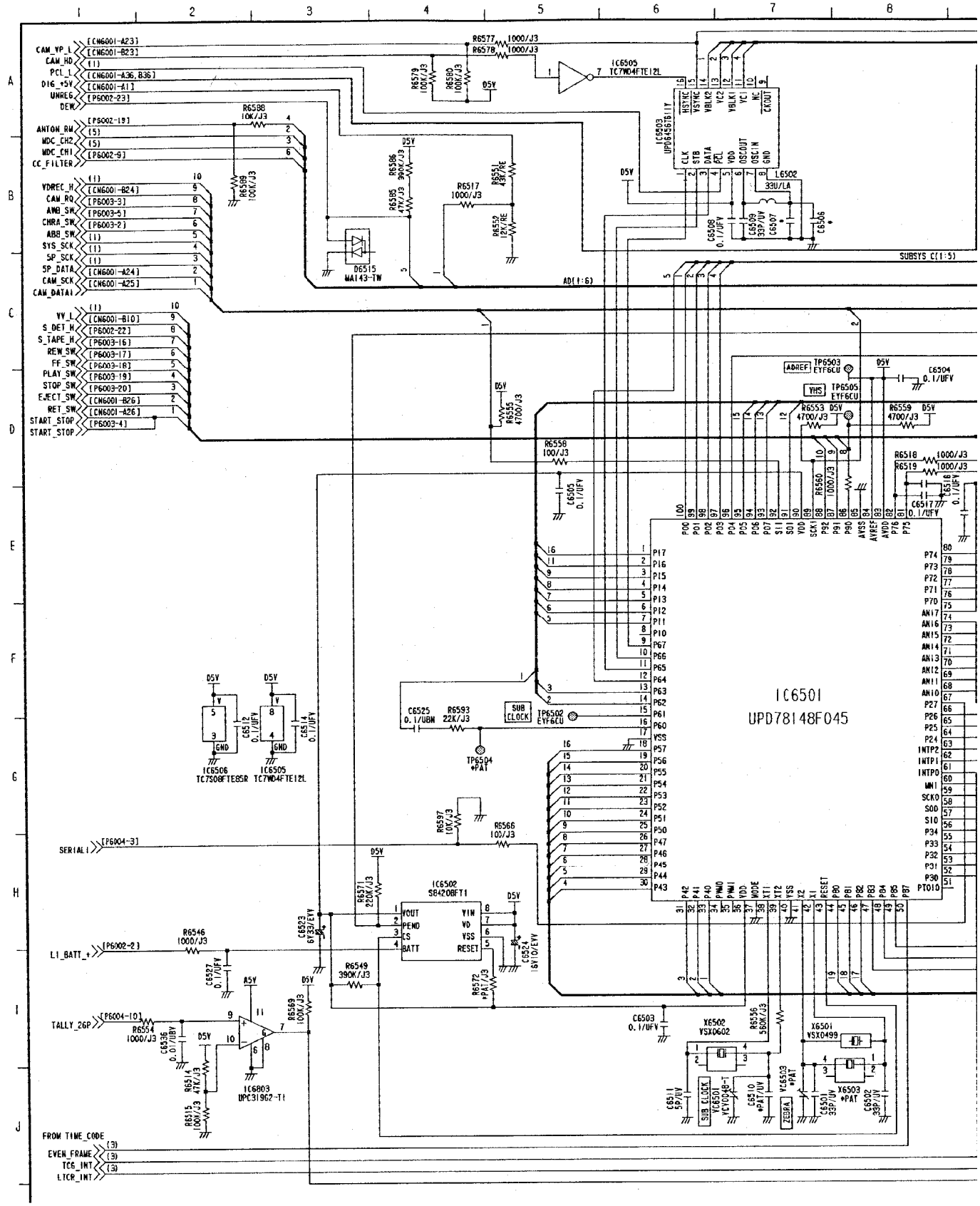

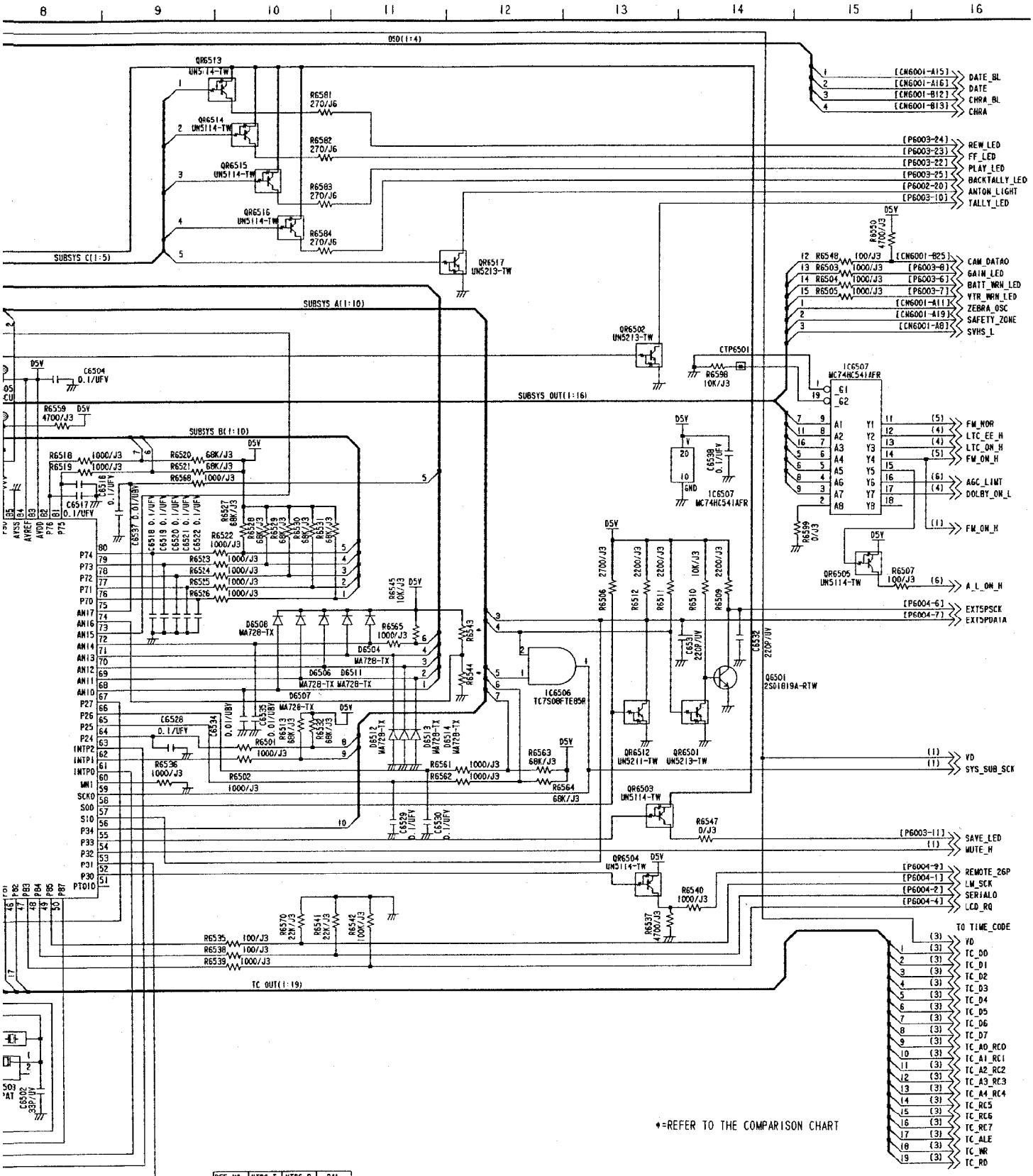

REF NO.	NTSC-T	NTSC-P	PAL
R6543	47K/J3	*PAT/J3	47K/J3
R6544	*PAT/J3	47K/J3	47K/J3

TIME CODE SCHEMATIC DIAGRAM 3／8 (E13:Page CBA-7)

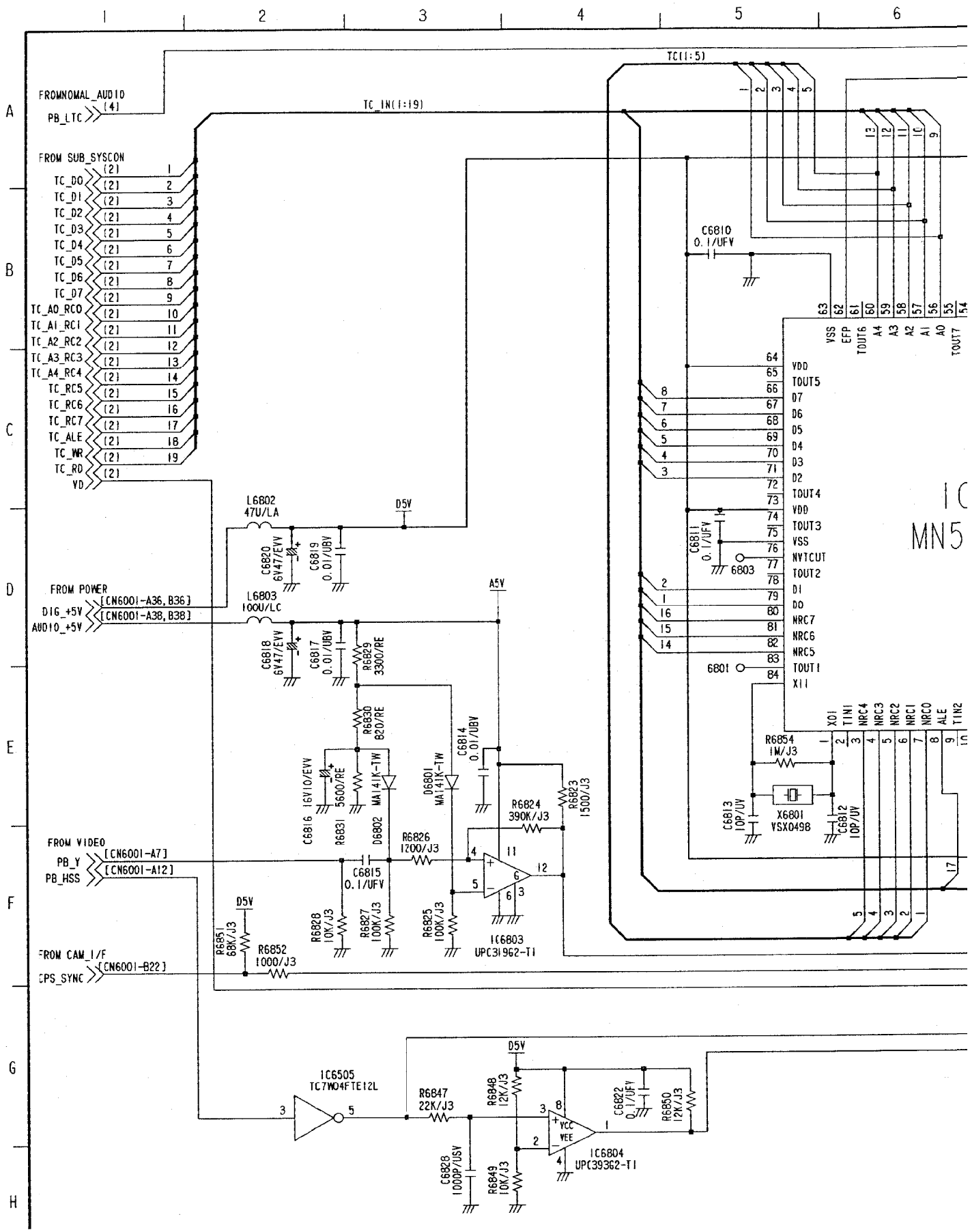

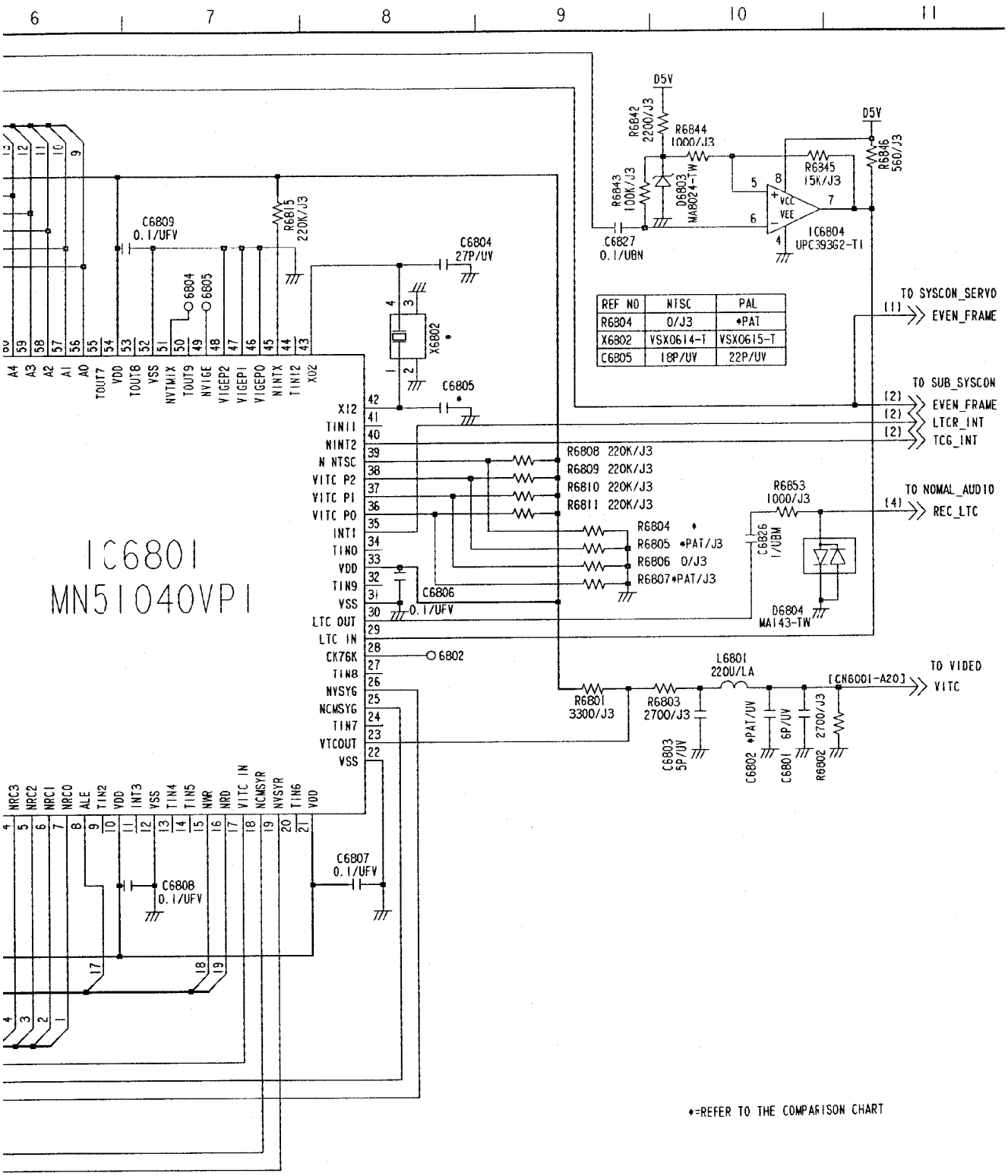
6
7
8
9
10
11
IC6801
MN51040VP1
D5V
R6842 2200/J3
R6844 1000/J3
R6843 100K/J3
D6803 MA8024-TW
R6845 15K/J3
R6846 560/J3
C6827 0.1/UBN
IC6804 UPC393G2-T1
C6809 0.1/UFV
R6815 220K/J3
C6804 27P/UV
X6802 *
C6805 *
C6806 0.1/UFV
C6807 0.1/UFV
C6808 0.1/UFV
R6808 220K/J3
R6809 220K/J3
R6810 220K/J3
R6811 220K/J3
R6804 *
R6805 *PAT/J3
R6806 0/J3
R6807 *PAT/J3
R6853 1000/J3
C6826 1/UBM
D6804 MA143-TW
R6801 3300/J3
R6803 2700/J3
L6801 220U/LA
C6803 5P/UV
C6802 *PAT/UV
C6801 6P/UV
R6802 2700/J3
C6802
TO SYSCON_SERVO
(1) EVEN_FRAME
TO SUB_SYSCON
(2) EVEN_FRAME
(2) LTCR_INT
(2) TCG_INT
TO NOMAL_AUDIO
(4) REC_LTC
TO VIDEO
[CN6001-A20] VITC
REF NO | NTSC | PAL
R6804 | 0/J3 | *PAT
X6802 | VSX0614-T | VSX0615-T
C6805 | 18P/UV | 22P/UV
*=REFER TO THE COMPARISON CHART

NORMAL AUDIO SCHEMATIC DIAGRAM 4／8（E13:Page CBA-7）

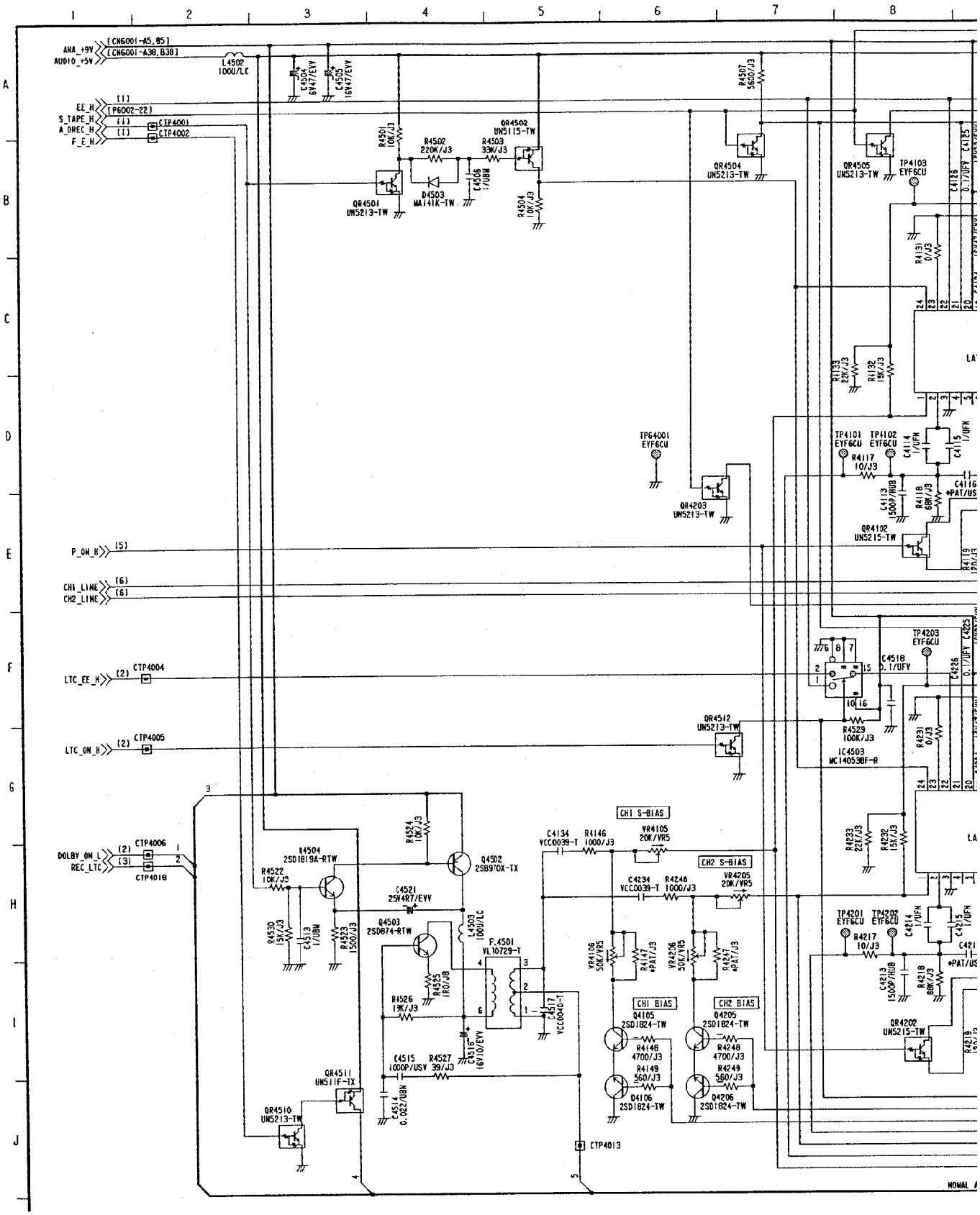

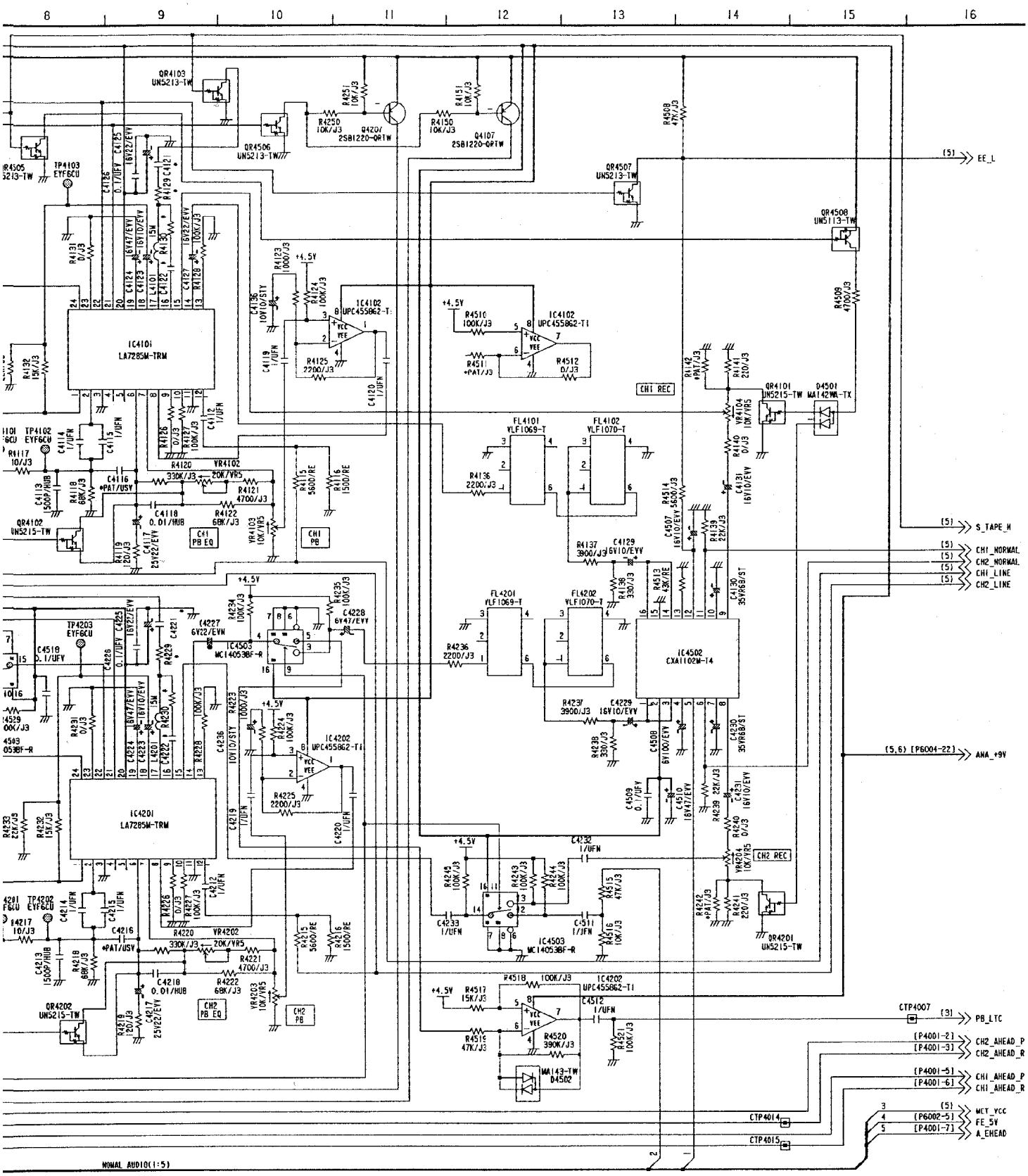
8
9
10
11
12
13
14
15
16
IC4101
LA7285M-TRM
IC4201
LA7285M-TRM
IC4102
UPC455862-T1
IC4202
UPC455862-T1
IC4503
MC14053BF-R
IC4502
CXA1102M-T4
FL4101
VLF1069-T
FL4102
VLF1070-T
FL4201
VLF1069-T
FL4202
VLF1070-T
CH1 REC
CH2 REC
CH1 PB EQ
CH2 PB EQ
CH1 PB
CH2 PB
EE_L
S_TAPE_H
CH1_NORMAL
CH2_NORMAL
CH1_LINE
CH2_LINE
ANA_+9V
PB_LTC
CH2_AHEAD_P
CH2_AHEAD_R
CH1_AHEAD_P
CH1_AHEAD_R
MCY_VCC
FE_5V
A_EHEAD
NOMAL AUDIO(1:5)
*=REFER TO THE COMPARISON CHART

FM AUDIO SCHEMATIC DIAGRAM 5／8 (E13:Page CBA-7)

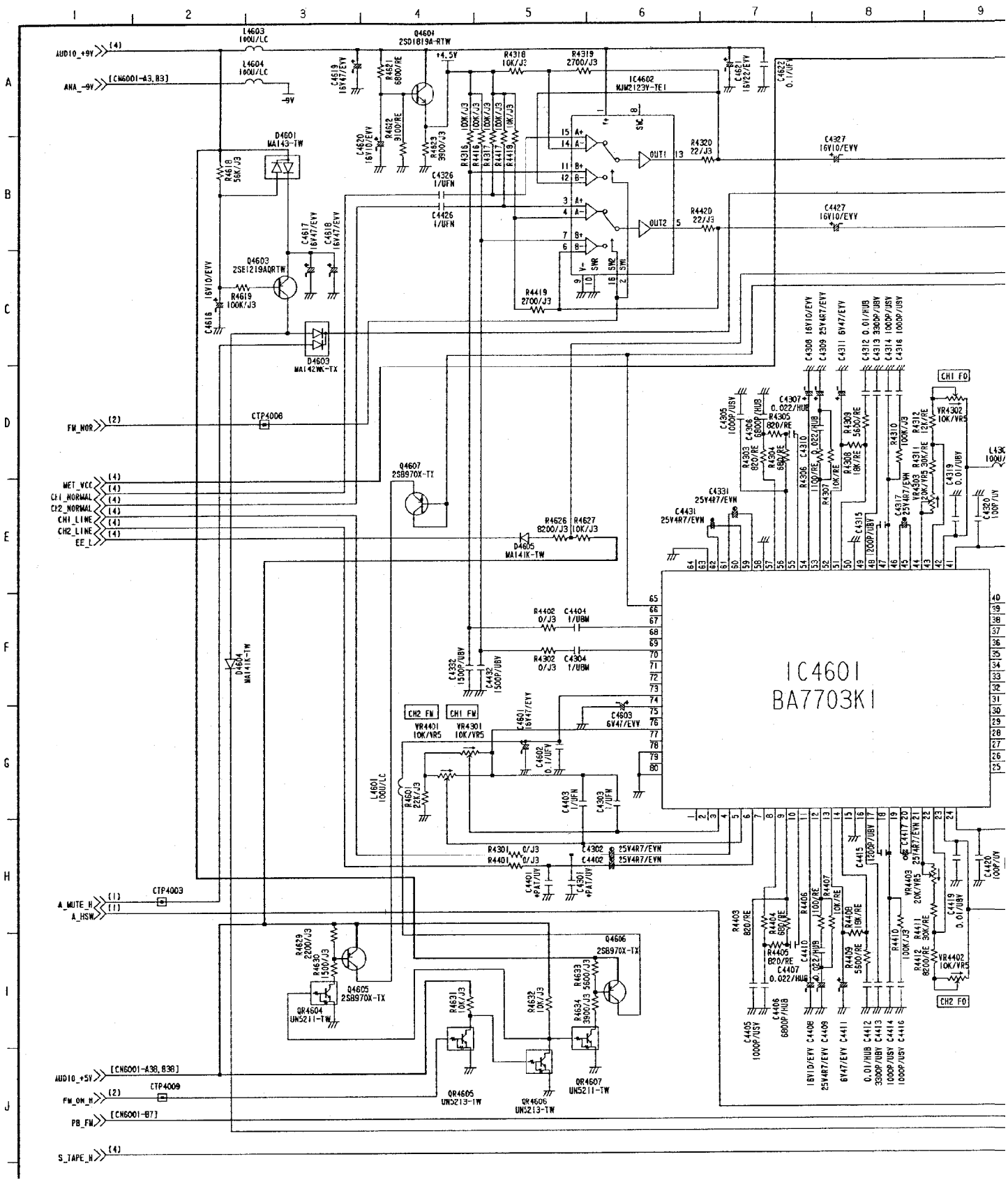

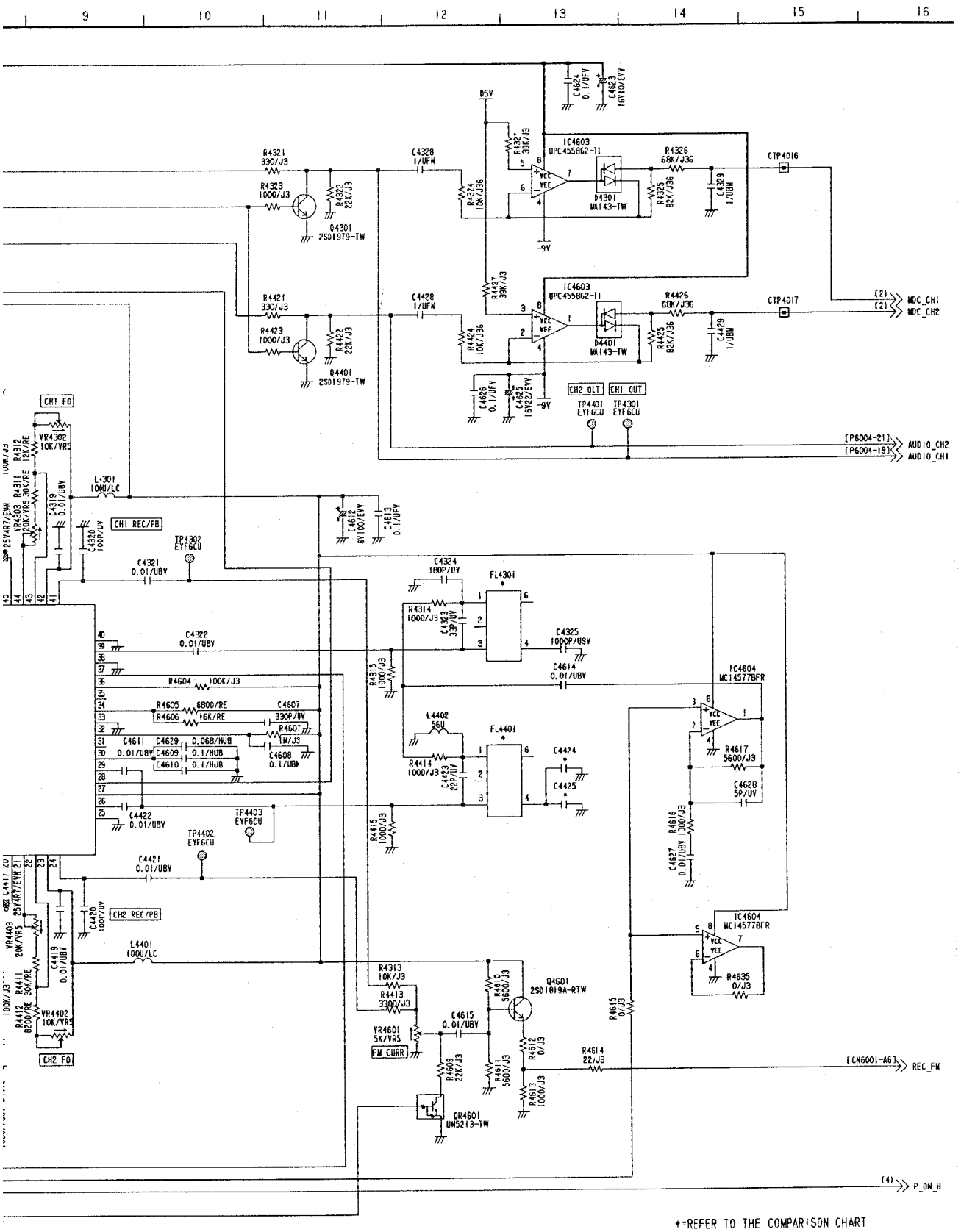
9
10
11
12
13
14
15
16
D5V
-9V
IC4603
UPC455B62-T1
Q4301
MA143-TW
Q4401
2SD1979-TW
CTP4016
CTP4017
(2) MDC_CH1
(2) MDC_CH2
CH2 OUT
CH1 OUT
TP4401 EYF6CU
TP4301 EYF6CU
[P6004-21] AUDIO_CH2
[P6004-19] AUDIO_CH1
CH1 FO
CH1 REC/PB
CH2 FO
CH2 REC/PB
L4301 100U/LC
L4401 100U/LC
FL4301
FL4401
IC4604
MC14577BFR
TP4302 EYF6CU
TP4402 EYF6CU
TP4403 EYF6CU
Q4601
2SD1819A-RTW
QR4601
UN5213-TW
FM CURR
[CN6001-A6] REC_FM
(4) P_ON_H
*=REFER TO THE COMPARISON CHART

AUDIO AGC SCHEMATIC DIAGRAM 6／8（E13:Page CBA-7）

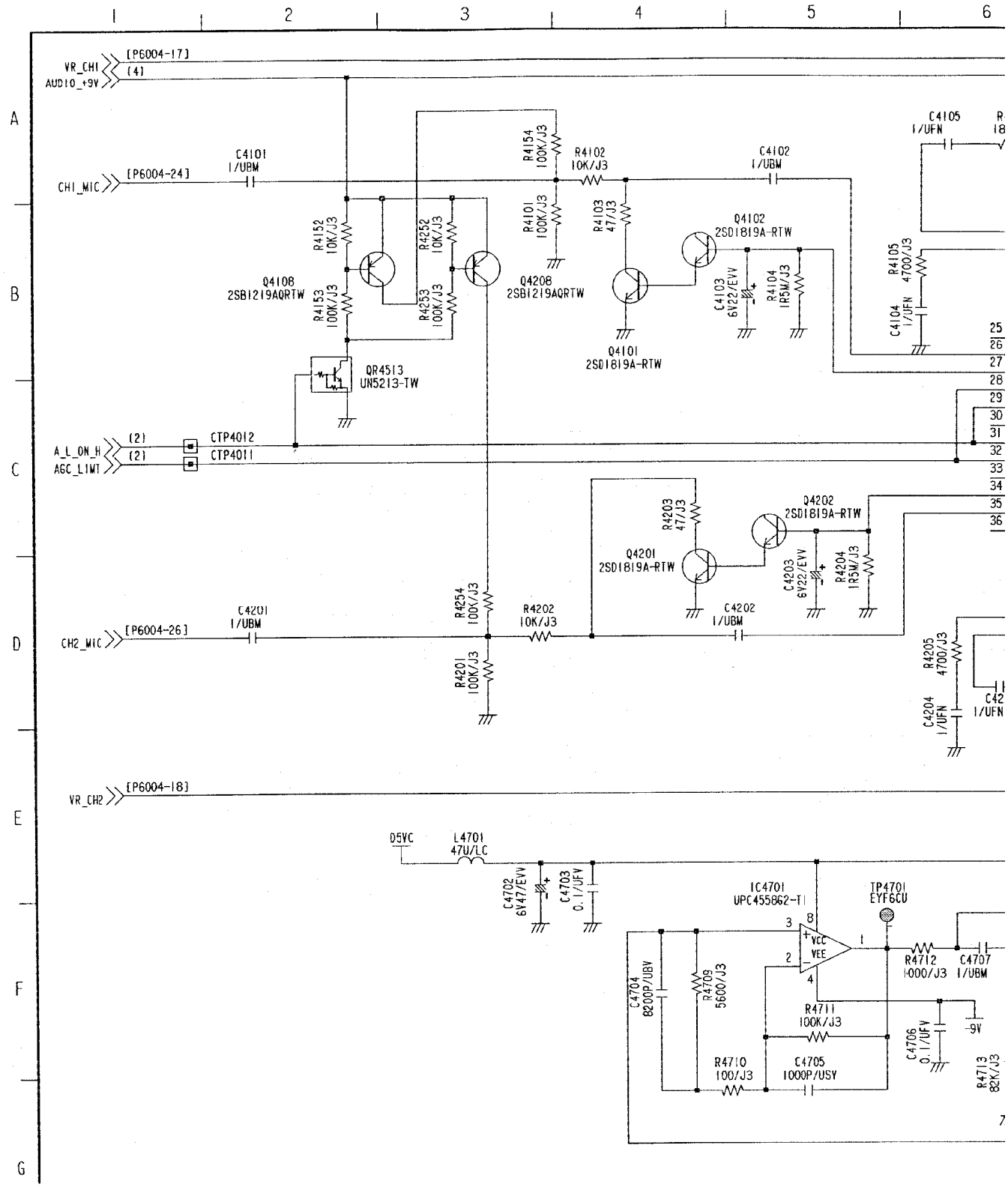

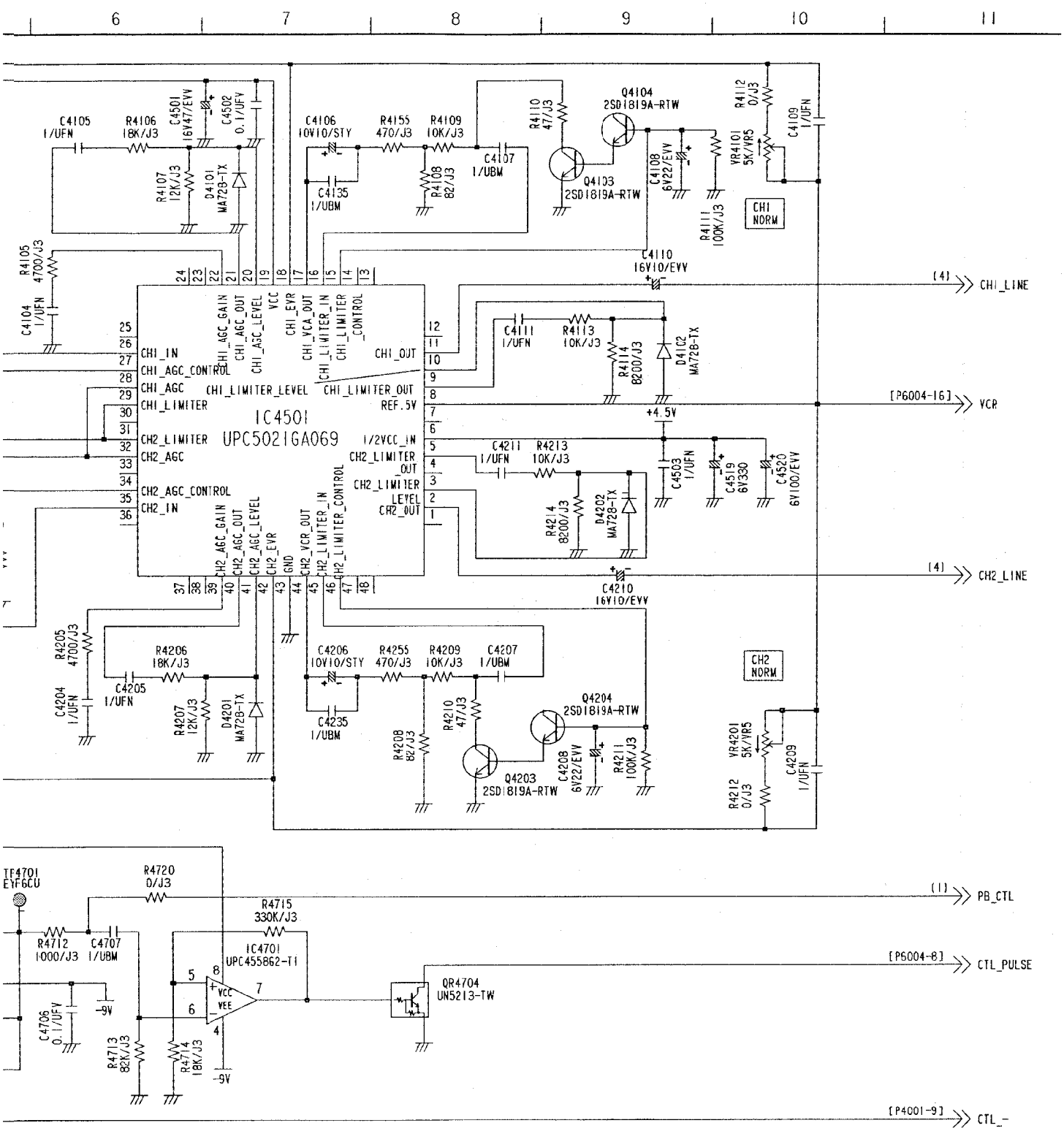
6
7
8
9
10
11
IC4501
UPC5021GA069
CH1_IN
CH1_AGC_CONTROL
CH1_AGC
CH1_LIMITER
CH2_LIMITER
CH2_AGC
CH2_AGC_CONTROL
CH2_IN
CH1_AGC_GAIN
CH1_AGC_OUT
CH1_AGC_LEVEL
VCC
CH1_EVR
CH1_VCA_OUT
CH1_LIMITER_IN
CH1_LIMITER_CONTROL
CH1_LIMITER_LEVEL
CH1_LIMITER_OUT
CH1_OUT
REF.5V
1/2VCC_IN
CH2_LIMITER_OUT
CH2_LIMITER_LEVEL
CH2_OUT
CH2_AGC_GAIN
CH2_AGC_OUT
CH2_AGC_LEVEL
CH2_EVR
GND
CH2_VCR_OUT
CH2_LIMITER_IN
CH2_LIMITER_CONTROL
C4105 1/UFN
R4106 18K/J3
C4501 16V47/EVV
C4502 0.1/UFV
R4107 12K/J3
D4101 MA728-TX
C4106 10V10/STY
R4155 470/J3
R4109 10K/J3
C4107 1/UBM
C4135 1/UBM
R4108 82/J3
R4110 47/J3
Q4104 2SD1819A-RTW
Q4103 2SD1819A-RTW
C4108 6V22/EVV
R4111 100K/J3
R4112 0/J3
VR4101 5K/VR5
C4109 1/UFN
CH1 NORM
R4105 4700/J3
C4104 1/UFN
C4110 16V10/EVV
C4111 1/UFN
R4113 10K/J3
R4114 8200/J3
D4102 MA728-TX
+4.5V
C4503 1/UFN
C4519 6V330
C4520 6V100/EVV
C4211 1/UFN
R4213 10K/J3
R4214 8200/J3
D4202 MA728-TX
C4210 16V10/EVV
R4205 4700/J3
R4206 18K/J3
C4205 1/UFN
C4204 1/UFN
R4207 12K/J3
D4201 MA728-TX
C4206 10V10/STY
R4255 470/J3
R4209 10K/J3
C4207 1/UBM
C4235 1/UBM
R4208 82/J3
R4210 47/J3
Q4204 2SD1819A-RTW
Q4203 2SD1819A-RTW
C4208 6V22/EVV
R4211 100K/J3
CH2 NORM
VR4201 5K/VR5
R4212 0/J3
C4209 1/UFN
TP4701 EYF6CU
R4720 0/J3
R4715 330K/J3
R4712 1000/J3
C4707 1/UBM
IC4701 UPC455B62-T1
VCC
VEE
-9V
C4706 0.1/UFV
R4713 82K/J3
R4714 18K/J3
QR4704 UN5213-TW
[4] CH1_LINE
[P6004-16] VCR
[4] CH2_LINE
[1] PB_CTL
[P6004-8] CTL_PULSE
[P4001-9] CTL_-

AUDIO SYSCON I／F 1 SCHEMATIC DIAGRAM 7／8 (E13:Page CBA-7)

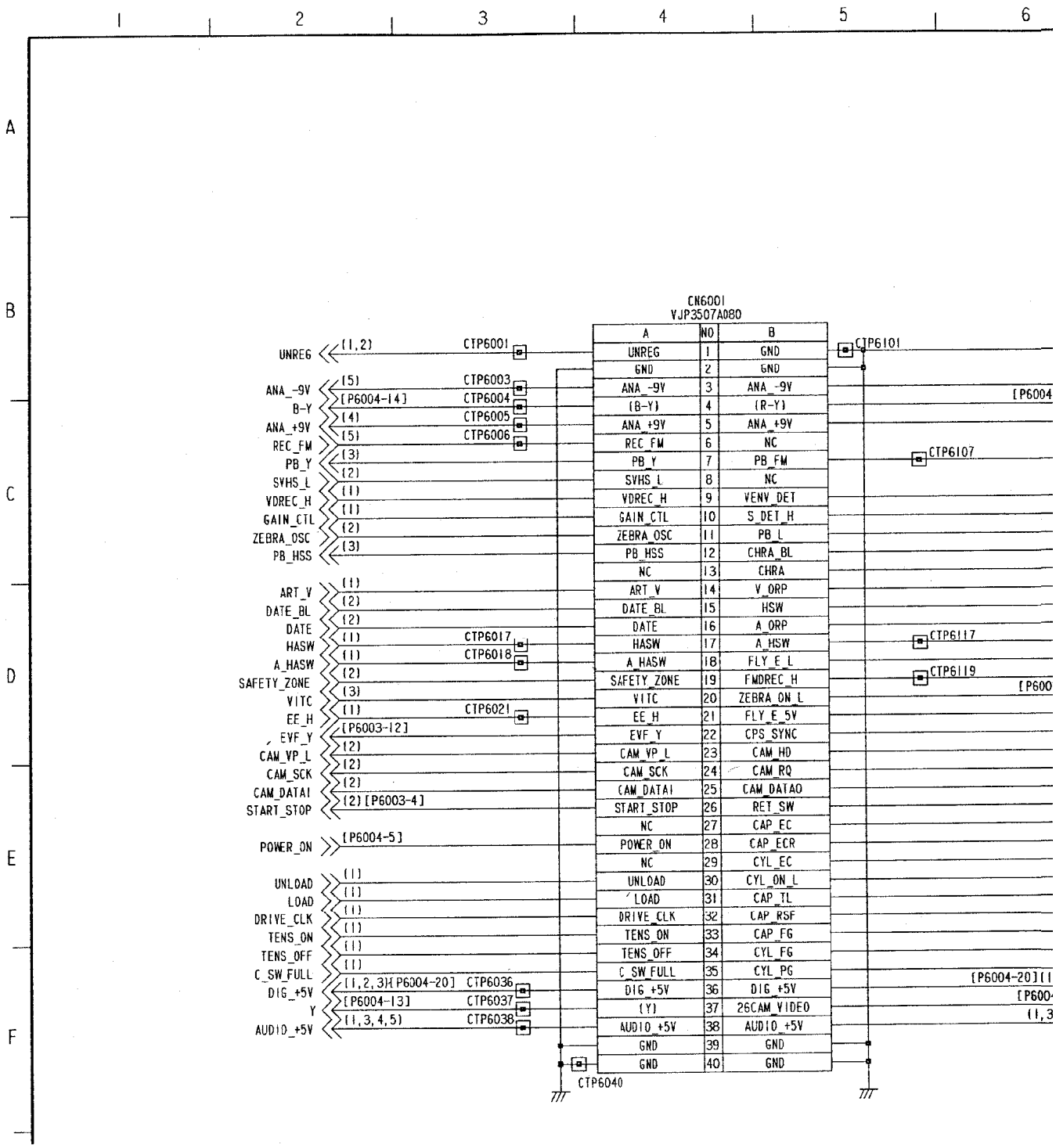

)

6 7 8 9 10

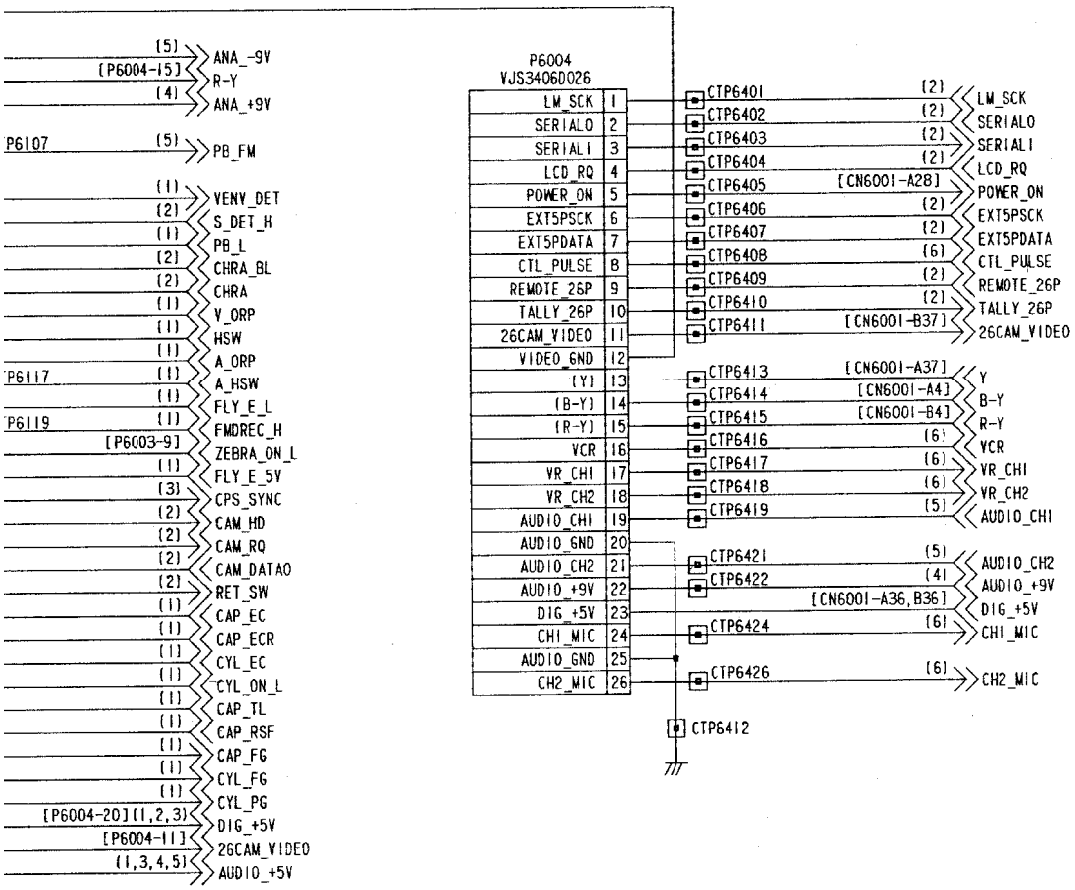
P6004
VJS3406D026
LM_SCK 1
SERIALO 2
SERIALI 3
LCD_RQ 4
POWER_ON 5
EXT5PSCK 6
EXT5PDATA 7
CTL_PULSE 8
REMOTE_26P 9
TALLY_26P 10
26CAM_VIDEO 11
VIDEO_GND 12
(Y) 13
(B-Y) 14
(R-Y) 15
VCR 16
VR_CH1 17
VR_CH2 18
AUDIO_CH1 19
AUDIO_GND 20
AUDIO_CH2 21
AUDIO_+9V 22
DIG_+5V 23
CH1_MIC 24
AUDIO_GND 25
CH2_MIC 26
CTP6401
CTP6402
CTP6403
CTP6404
CTP6405
CTP6406
CTP6407
CTP6408
CTP6409
CTP6410
CTP6411
CTP6412
CTP6413
CTP6414
CTP6415
CTP6416
CTP6417
CTP6418
CTP6419
CTP6421
CTP6422
CTP6424
CTP6426
[5] ANA_-9V
[P6004-15] R-Y
[4] ANA_+9V
P6107 [5] PB_FM
[1] VENV_DET
[2] S_DET_H
[1] PB_L
[2] CHRA_BL
[2] CHRA
[1] V_ORP
[1] HSW
[1] A_ORP
P6117 [1] A_HSW
[1] FLY_E_L
P6119 [1] FMDREC_H
[P6003-9] ZEBRA_ON_L
[1] FLY_E_5V
[3] CPS_SYNC
[2] CAM_HD
[2] CAM_RQ
[2] CAM_DATAO
[2] RET_SW
[1] CAP_EC
[1] CAP_ECR
[1] CYL_EC
[1] CYL_ON_L
[1] CAP_TL
[1] CAP_RSF
[1] CAP_FG
[1] CYL_FG
[1] CYL_PG
[P6004-20][1,2,3] DIG_+5V
[P6004-11] 26CAM_VIDEO
[1,3,4,5] AUDIO_+5V
[2] LM_SCK
[2] SERIALO
[2] SERIALI
[2] LCD_RQ
[CN6001-A28] POWER_ON
[2] EXT5PSCK
[2] EXT5PDATA
[6] CTL_PULSE
[2] REMOTE_26P
[2] TALLY_26P
[CN6001-B37] 26CAM_VIDEO
[CN6001-A37] Y
[CN6001-A4] B-Y
[CN6001-B4] R-Y
[6] VCR
[6] VR_CH1
[6] VR_CH2
[5] AUDIO_CH1
[5] AUDIO_CH2
[4] AUDIO_+9V
[CN6001-A36,B36] DIG_+5V
[6] CH1_MIC
[6] CH2_MIC

AUDIO SYSCON I／F 2 SCHEMATIC DIAGRAM 8／8 (E13:Page CBA-7)

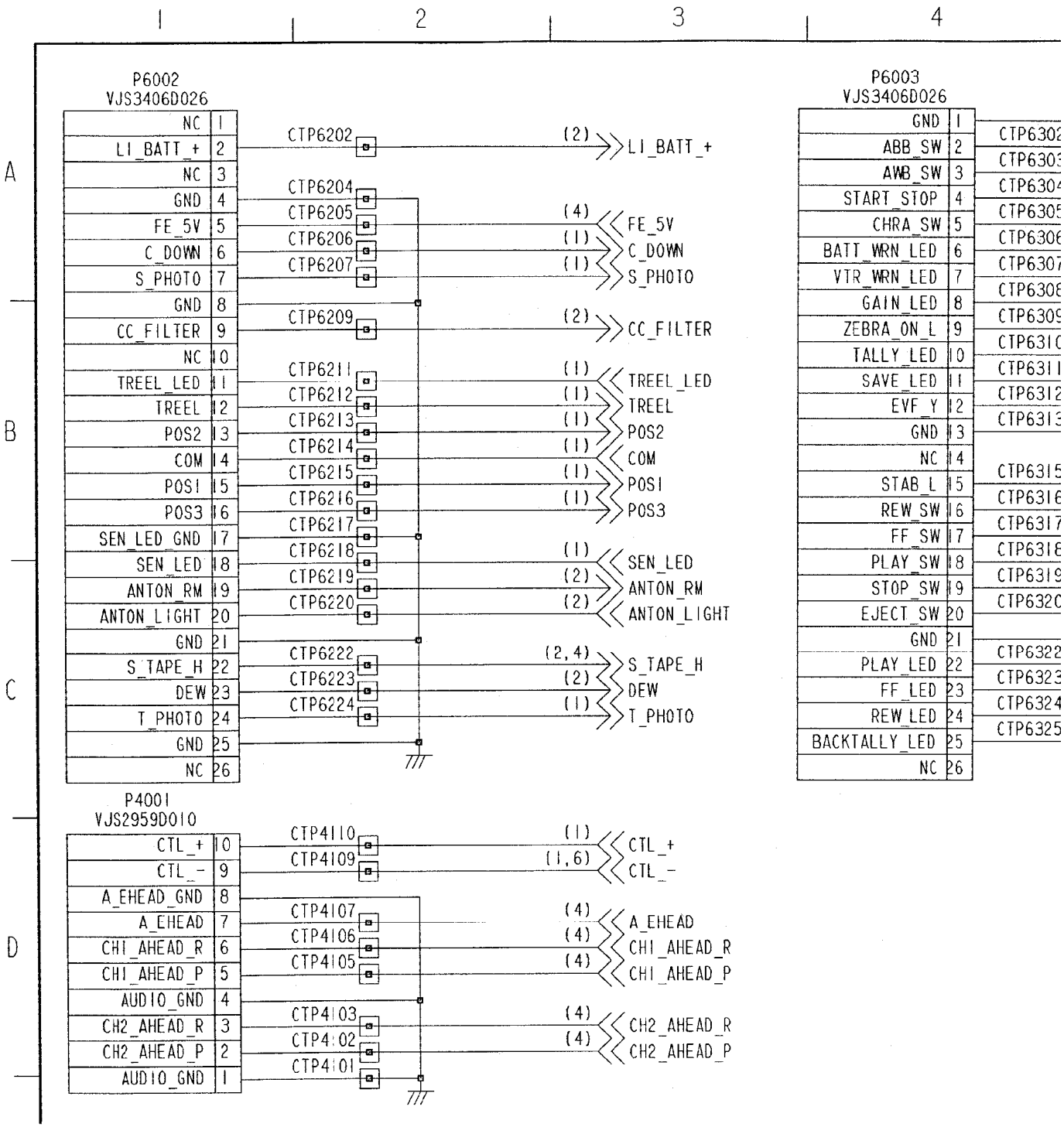

)

AUDIO SYSCON COMPARISON CHART

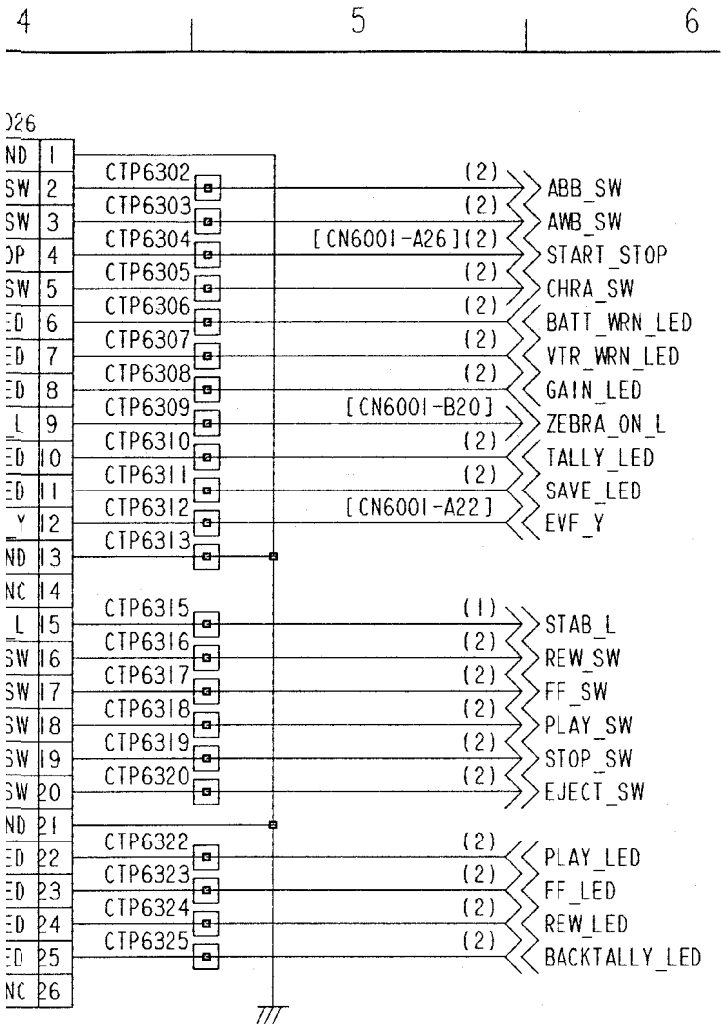

REF	NTSC-T	NTSC-P	PAL
C4116	*PAT/USV	*PAT/USV	*PAT/USV
C4121	8200P	8200P	0.012/HUB
C4122	0.01	0.01	0.012/HUB
C4216	*PAT/USV	*PAT/USV	*PAT/USV
C4221	8200P	8200P	0.012/HUB
C4222	0.01	0.01	0.012/HUB
C4301	*PAT/UV	*PAT/UV	*PAT/UV
C4401	*PAT/UV	*PAT/UV	*PAT/UV
C4424	*PAT/UV	*PAT/UV	390P/UV
C4425	470P/UV	470P/UV	390P/UV
C6506	22P/UV	22P/UV	12P/UV
C6507	*PAT/UV	*PAT/UV	12P/UV
C6510	*PAT/UV	*PAT/UV	*PAT/UV
C6802	*PAT/UV	*PAT/UV	*PAT/UV
C6805	18P/UV	18P/UV	22P/UV
FL4301	VLF0944-1T	VLF0944-1T	VLF0934-1T
FL4401	VLF0945-1T	VLF0945-1T	VLF0935-1T
IC6001	VSI1507B	VSI1507B	VSI1653A
QR2007	*PAT	*PAT	*PAT
QR2008	*PAT	*PAT	*PAT
R4129	680/J3	680/J3	100/J3
R4130	820/J3	820/J3	220/J3
R4142	*PAT/J3	*PAT/J3	*PAT/J3
R4147	*PAT/J3	*PAT/J3	*PAT/J3
R4229	680/J3	680/J3	100/J3
R4230	820/J3	820/J3	220/J3
R4242	*PAT/J3	*PAT/J3	*PAT/J3
R4247	*PAT/J3	*PAT/J3	*PAT/J3
R4511	*PAT/J3	*PAT/J3	*PAT/J3
R6025	*PAT/J3	*PAT/J3	*PAT/J3
R6027	10K/J3	10K/J3	22K/J3
R6080	0/J3	0/J3	*PAT/J3
R6087	*PAT/J3	*PAT/J3	*PAT/J3
R6543	47K/J3	*PAT/J3	47K/J3
R6544	*PAT/J3	47K/J3	47K/J3
R6572	*PAT/J3	*PAT/J3	*PAT/J3
R6804	0/J3	0/J3	*PAT/J3
R6805	*PAT/J3	*PAT/J3	*PAT/J3
R6807	*PAT/J3	*PAT/J3	*PAT/J3
TP6504	*PAT	*PAT	*PAT
VC6503	*PAT	*PAT	*PAT
X6503	*PAT	*PAT	*PAT
X6802	VSX0614-T	VSX0614-T	VSX0615-T

POWER SCHEMATIC DIAGRAM 1／3（E10:Page CBA-9）

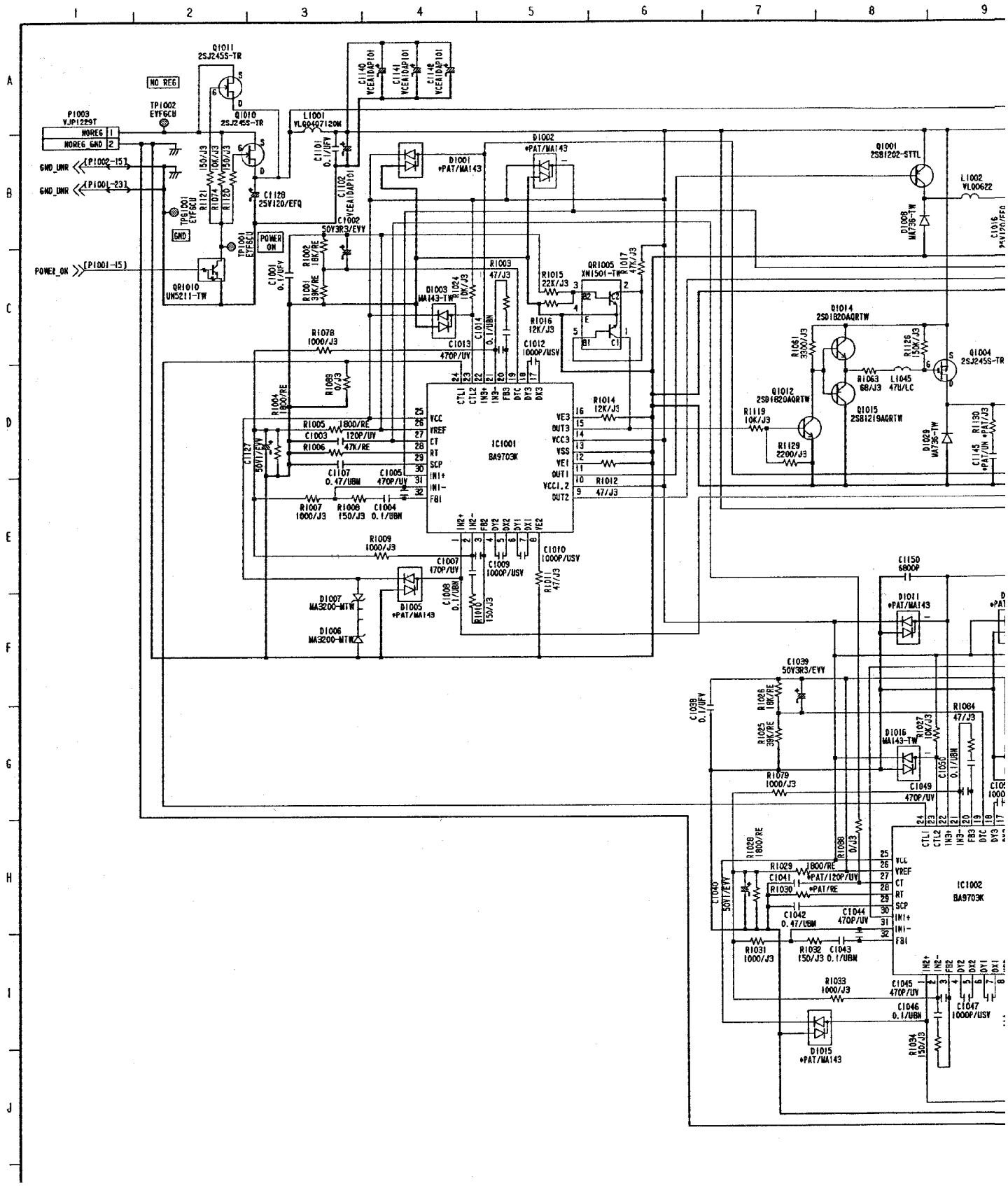

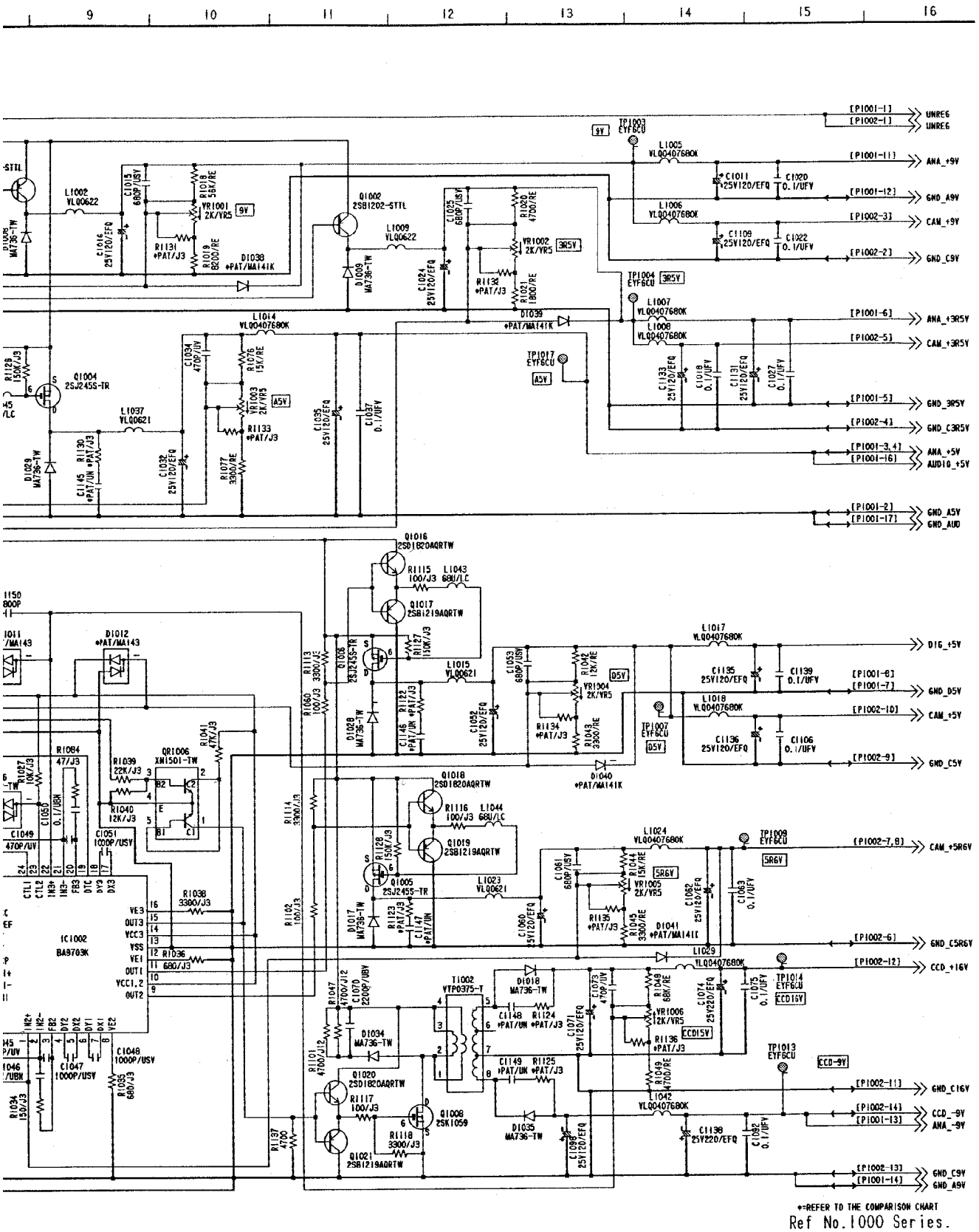

Ref No.1000 Series.

DRIVE SCHEMATIC DIAGRAM 2／3（E10:Page CBA-9）

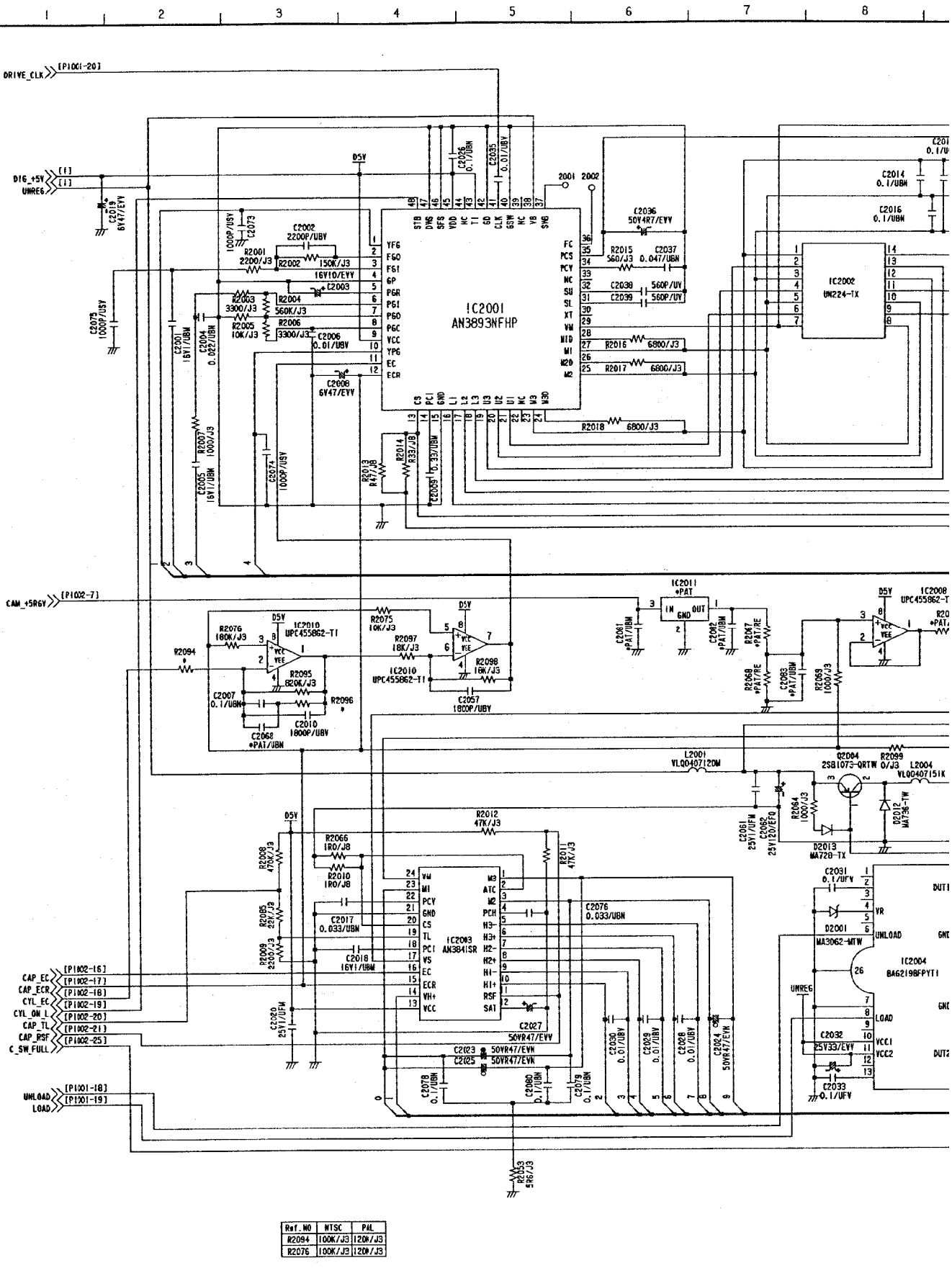

Ref. NO	NTSC	PAL
R2094	100K/J3	120K/J3
R2076	100K/J3	120K/J3

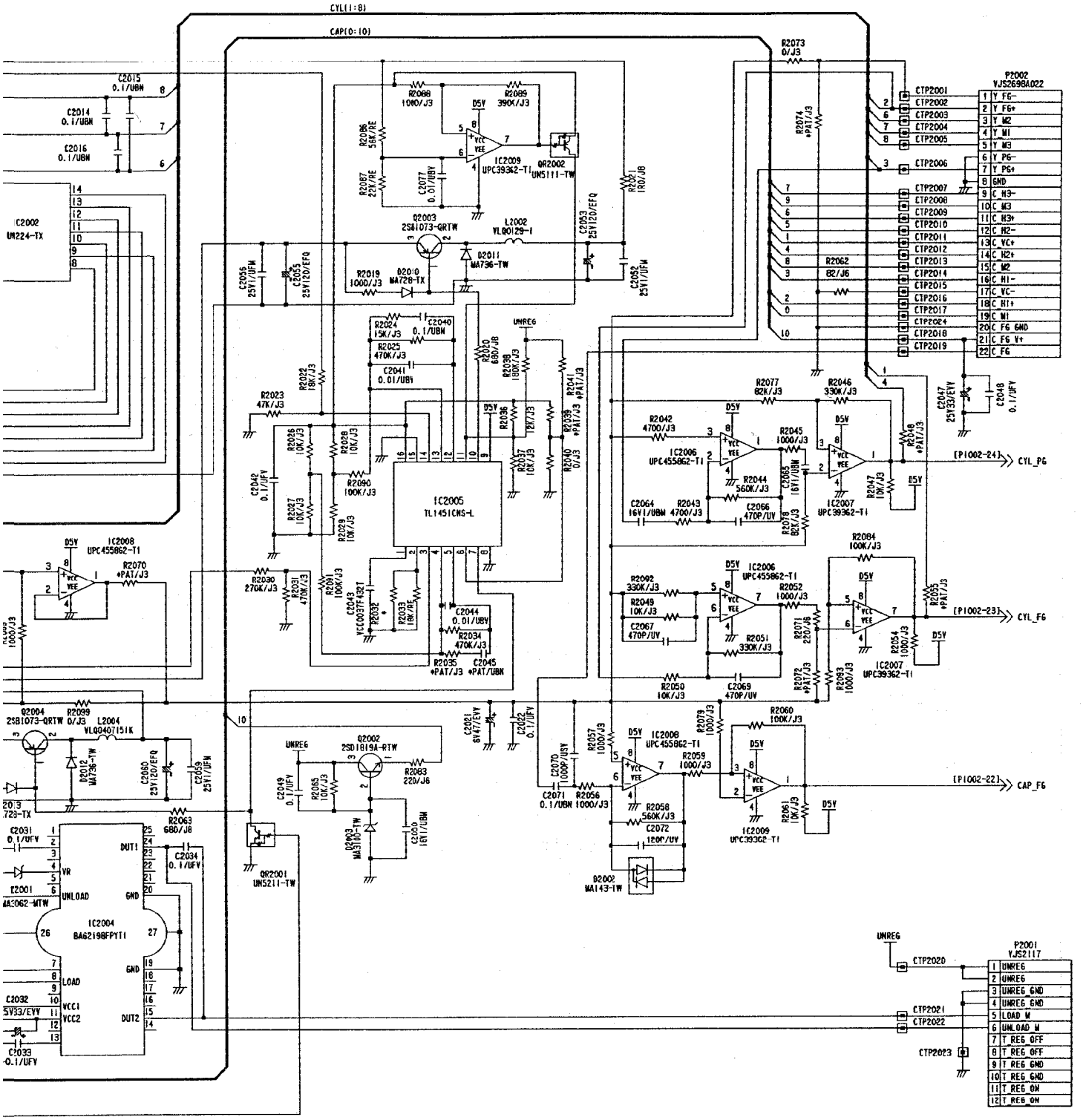
8
9
10
11
12
13
14
15
16
CYL(1:8)
CAP(0:10)
IC2005
TL1451CNS-L
IC2006
UPC455862-T1
IC2007
UPC39362-T1
IC2008
UPC455862-T1
IC2009
UPC39362-T1
IC2004
BA6219BFPY-T1
Q2001
UNS211-TW
Q2002
2SD1819A-RTW
Q2003
2SB1073-QRTW
Q2004
2SB1073-QRTW
Q2002
UNS111-TW
D2010
MA728-TX
D2011
MA736-TW
D2012
MA736-TW
D2002
MA143-TW
D2003
MA3100-TW
L2002
VLQ0129-1
L2004
VLQ0407151K
P2002
VJS2698A022
P2001
VJS2117
CTP2001
CTP2002
CTP2003
CTP2004
CTP2005
CTP2006
CTP2007
CTP2008
CTP2009
CTP2010
CTP2011
CTP2012
CTP2013
CTP2014
CTP2015
CTP2016
CTP2017
CTP2024
CTP2018
CTP2019
CTP2020
CTP2021
CTP2022
CTP2023
1 Y FG-
2 Y FG+
3 Y M2
4 Y M1
5 Y M3
6 Y PG-
7 Y PG+
8 GND
9 C M3-
10 C M3
11 C M3+
12 C M2-
13 C VC+
14 C M2+
15 C M2
16 C M1-
17 C VC-
18 C M1+
19 C M1
20 C FG GND
21 C FG V+
22 C FG
1 UNREG
2 UNREG
3 UNREG GND
4 UNREG GND
5 LOAD M
6 UNLOAD M
7 T REG OFF
8 T REG OFF
9 T REG GND
10 T REG GND
11 T REG ON
12 T REG ON
[P1002-24] CYL PG
[P1002-23] CYL FG
[P1002-22] CAP FG
D5V
UNREG
*=REFER TO THE COMPARISON CHART
Ref No.2000 Series.

POWER SCHEMATIC DIAGRAM 3／3 (E10:Page CBA-9)

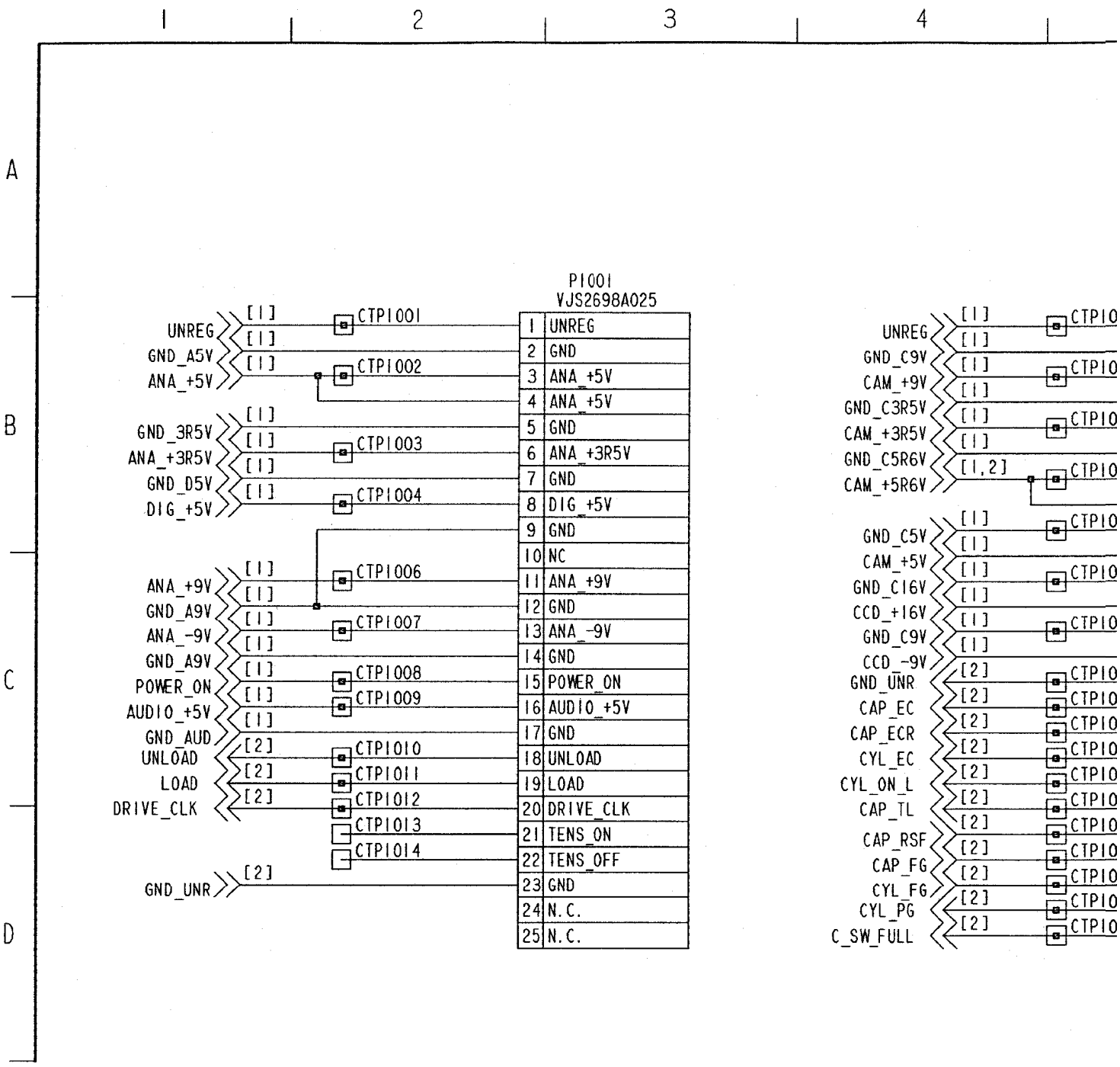

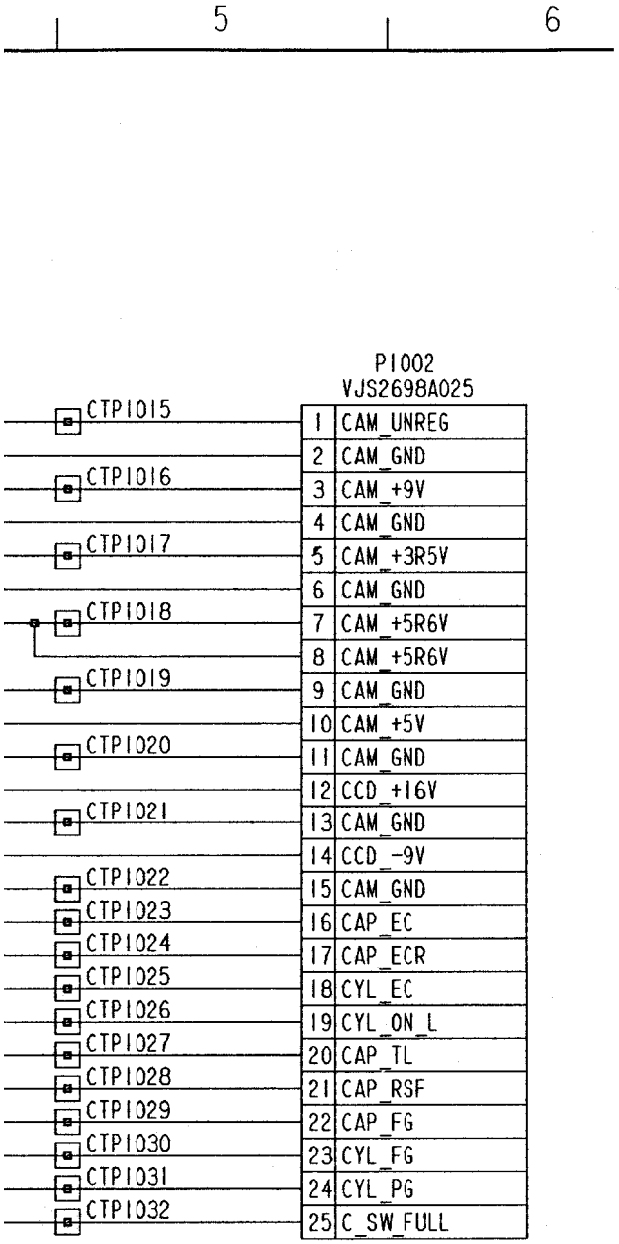

POWER COMPARISON CHART

REF	NTSC	PAL
C1041	*PAT/UV	*PAT/UV
C1145	*PAT/UBN	*PAT/UBN
C1146	*PAT/UBN	*PAT/UBN
C1147	*PAT/UBN	*PAT/UBN
C1148	*PAT/UBN	*PAT/UBN
C1149	*PAT/UBN	*PAT/UBN
C2045	*PAT/UBN	*PAT/UBN
C2068	*PAT/UBN	*PAT/UBN
C2081	*PAT/UBM	*PAT/UBM
C2082	*PAT/UBM	*PAT/UBM
C2083	*PAT/UBM	*PAT/UBM
D1001	*PAT	*PAT
D1002	*PAT	*PAT
D1005	*PAT	*PAT
D1011	*PAT	*PAT
D1012	*PAT	*PAT
D1015	*PAT	*PAT
D1038	*PAT	*PAT
D1039	*PAT	*PAT
D1040	*PAT	*PAT
D1041	*PAT	*PAT
IC2011	*PAT	*PAT
R1030	*PAT/RE	*PAT/RE
R1122	*PAT/J3	*PAT/J3
R1123	*PAT/J3	*PAT/J3
R1124	*PAT/J3	*PAT/J3
R1125	*PAT/J3	*PAT/J3
R1130	*PAT/J3	*PAT/J3
R1131	*PAT/J3	*PAT/J3
R1132	*PAT/J3	*PAT/J3
R1133	*PAT/J3	*PAT/J3
R1134	*PAT/J3	*PAT/J3
R1135	*PAT/J3	*PAT/J3
R1136	*PAT/J3	*PAT/J3
R2032	330K/RE	*PAT/RE
R2035	*PAT/J3	*PAT/J3
R2039	*PAT/J3	*PAT/J3
R2041	*PAT/J3	*PAT/J3
R2048	*PAT/J3	*PAT/J3
R2055	*PAT/J3	*PAT/J3
R2067	*PAT/RE	*PAT/RE
R2068	*PAT/RE	*PAT/RE
R2070	*PAT/J3	*PAT/J3
R2072	*PAT/J3	*PAT/J3
R2074	*PAT/J3	*PAT/J3
R2094	100K/J3	120K/J3
R2096	100K/J3	120K/J3

REAR JACK SCHEMATIC DIAGRAM 1／2 (E6:Page CBA-3)

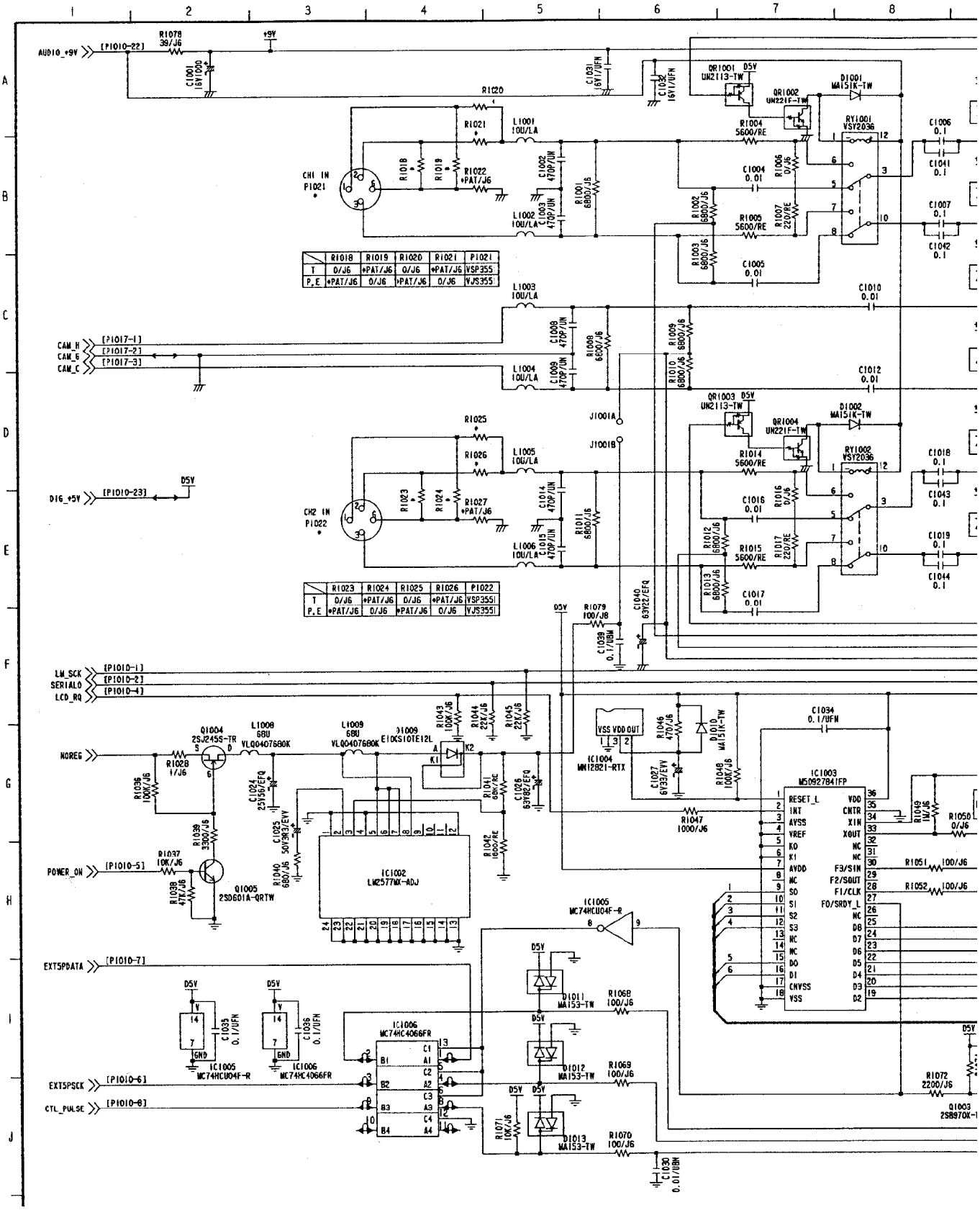

	R1018	R1019	R1020	R1021	P1021
T	0/J6	*PAT/J6	0/J6	*PAT/J6	VSP355
P,E	*PAT/J6	0/J6	*PAT/J6	0/J6	VJS355

	R1023	R1024	R1025	R1026	P1022
T	0/J6	*PAT/J6	0/J6	*PAT/J6	VSP355
P,E	*PAT/J6	0/J6	*PAT/J6	0/J6	VJS355

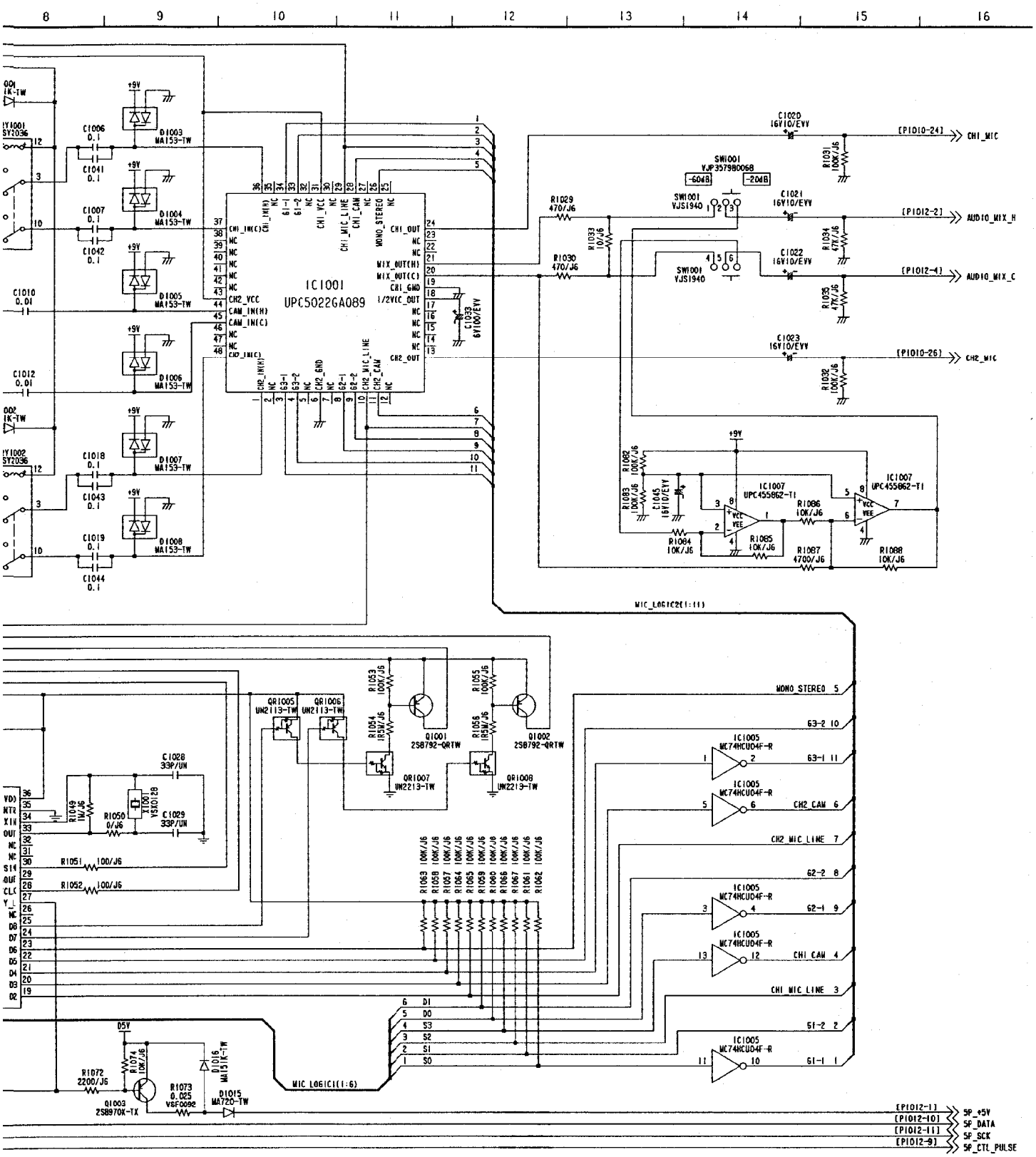
IC1001
UPC5022GA089
IC1007
UPC455862-TI
IC1005
MC74HCU04F-R
SW1001
VJP357980068
SW1001
VJS1940
MIC LOGIC2(1:11)
MIC LOGIC1(1:6)
[P1012-1] 5P_+5V
[P1012-10] 5P_DATA
[P1012-11] 5P_SCK
[P1012-9] 5P_CTL_PULSE
*=REFER TO THE COMPARISON CHART
Ref No.1000 Series.

REAR JACK SCHEMATIC DIAGRAM 2／2 (E6:Page CBA-3)

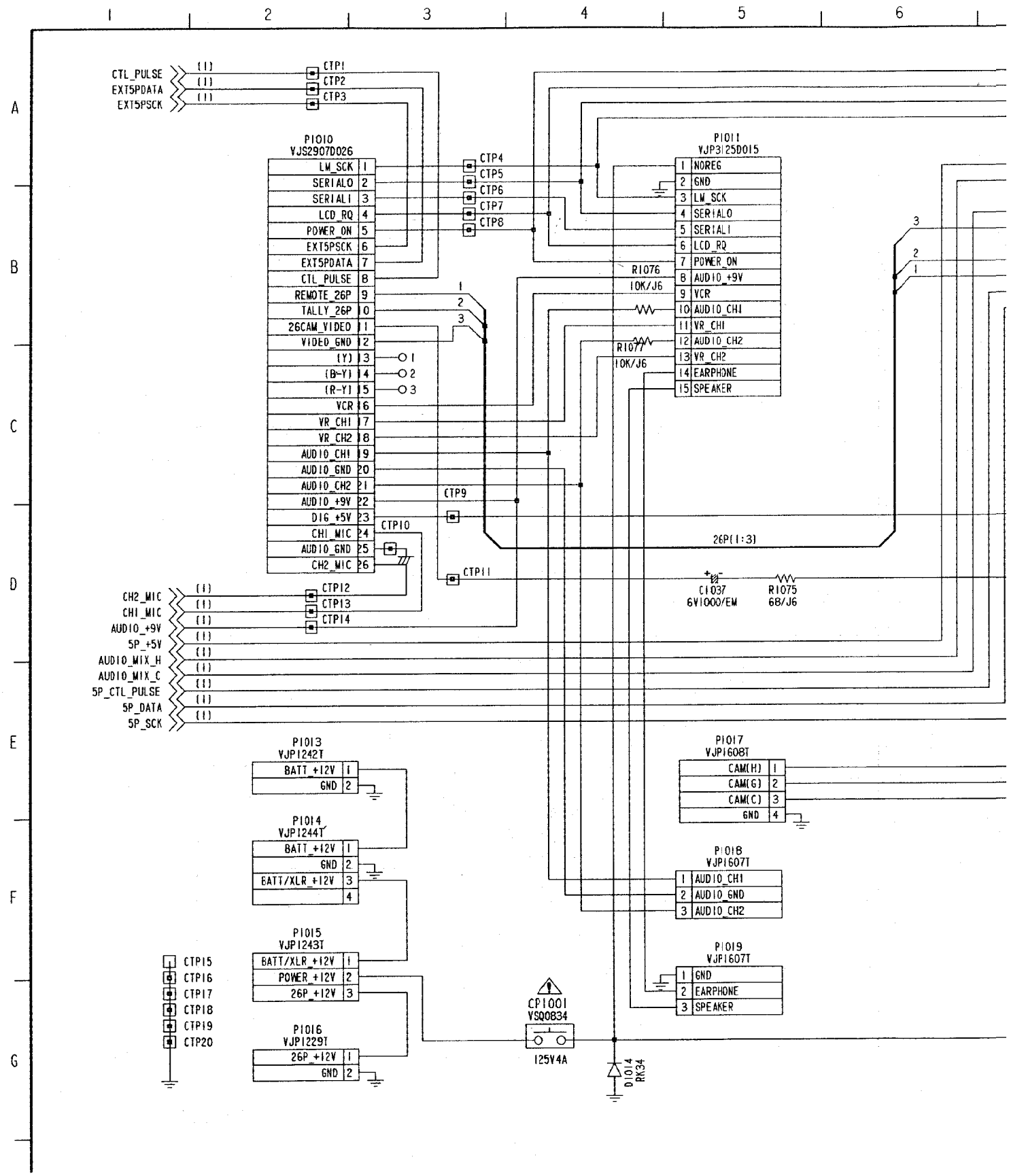

REAR JACK COMPARSION CHART

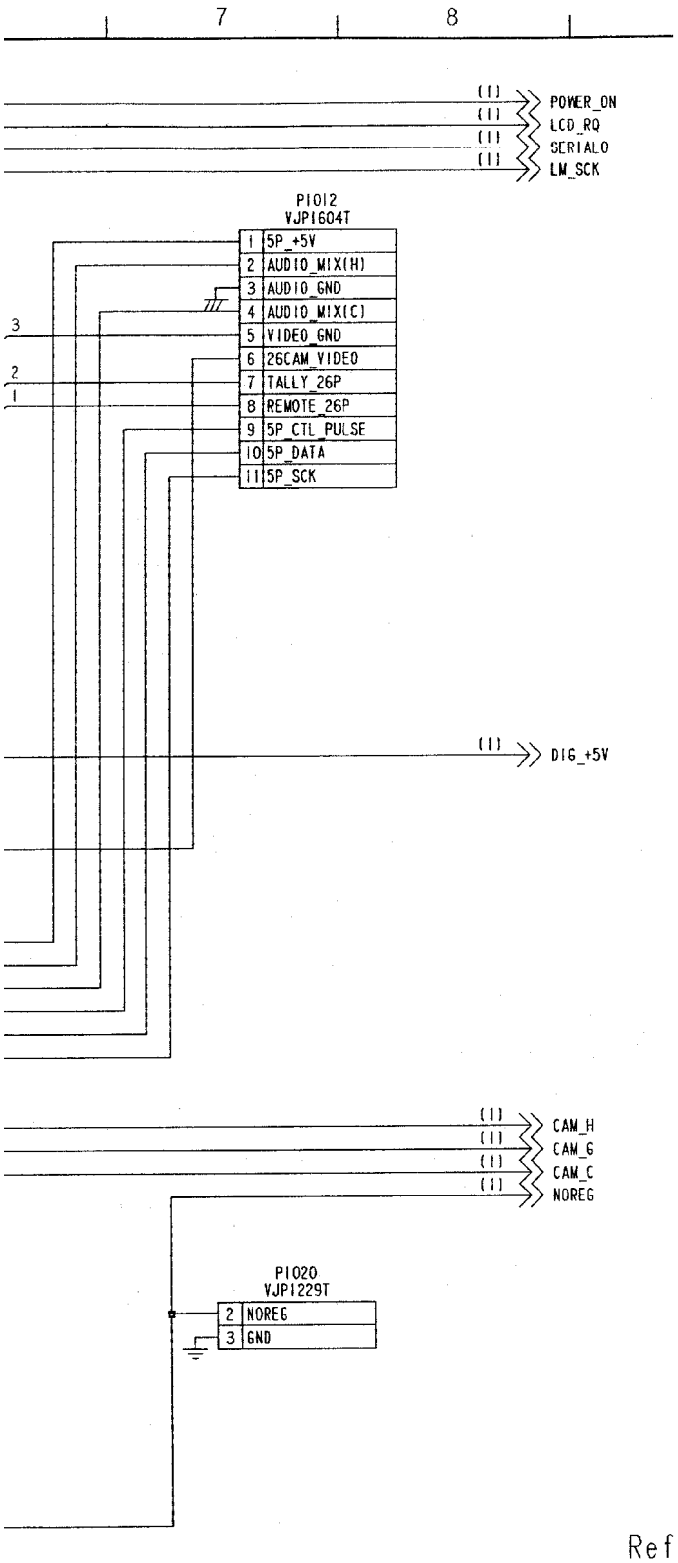

REF	D190-T	D190-PE
R1018	0/J6	*PAT/J6
R1019	*PAT/J6	0/J6
R1020	0/J6	*PAT/J6
R1021	*PAT/J6	0/J6
R1022	*PAT/J6	*PAT/J6
R1023	0/J6	*PAT/J6
R1024	*PAT/J6	0/J6
R1025	0/J6	*PAT/J6
R1026	*PAT/J6	0/J6
R1027	*PAT/J6	*PAT/J6
P1021	VJP3551	VJS3551
P1022	VJP3551	VJS3551

Ref No. 1000 Series.

LCD SCHEMATIC DIAGRAM 1／1 (E30:Page CBA-8)

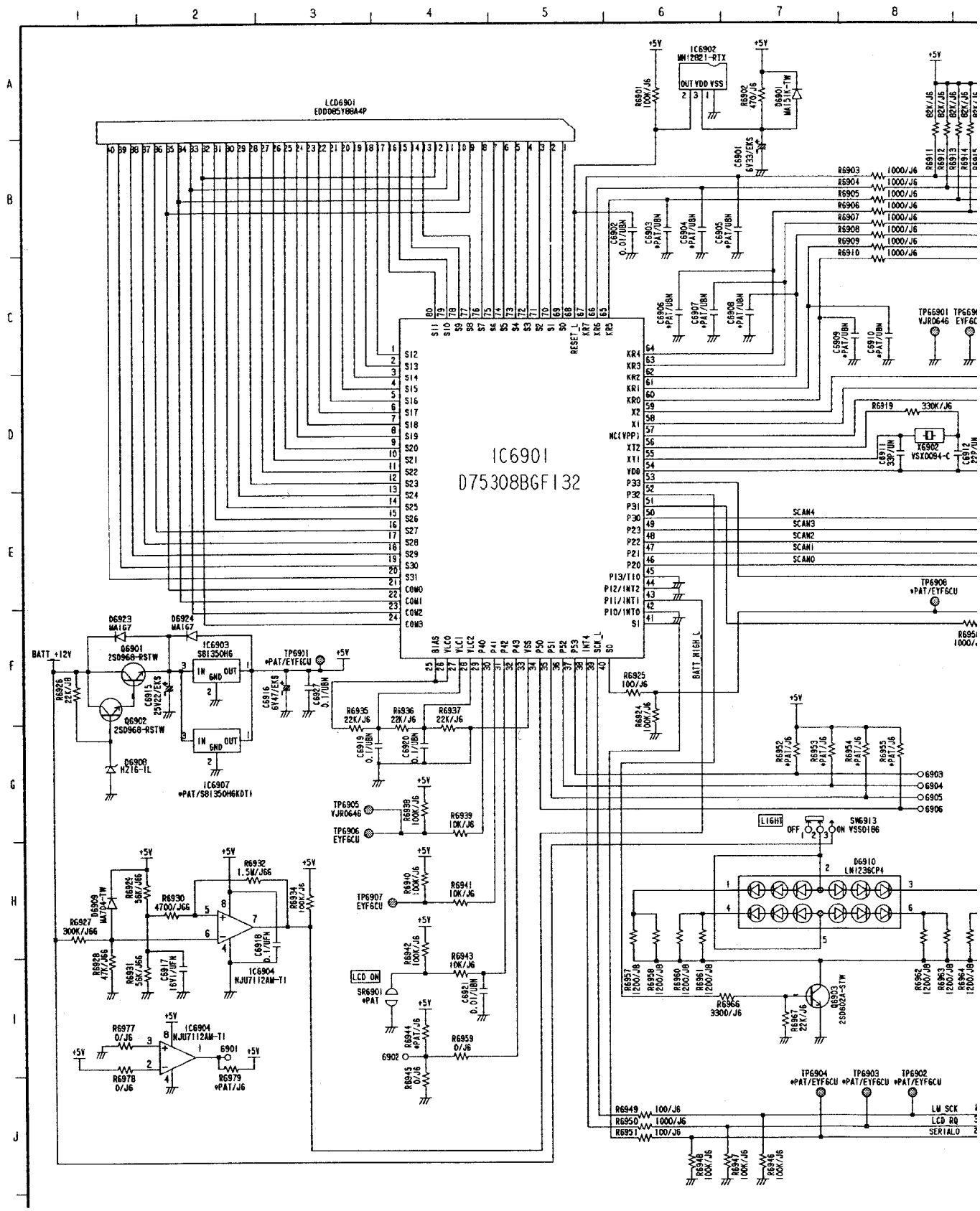

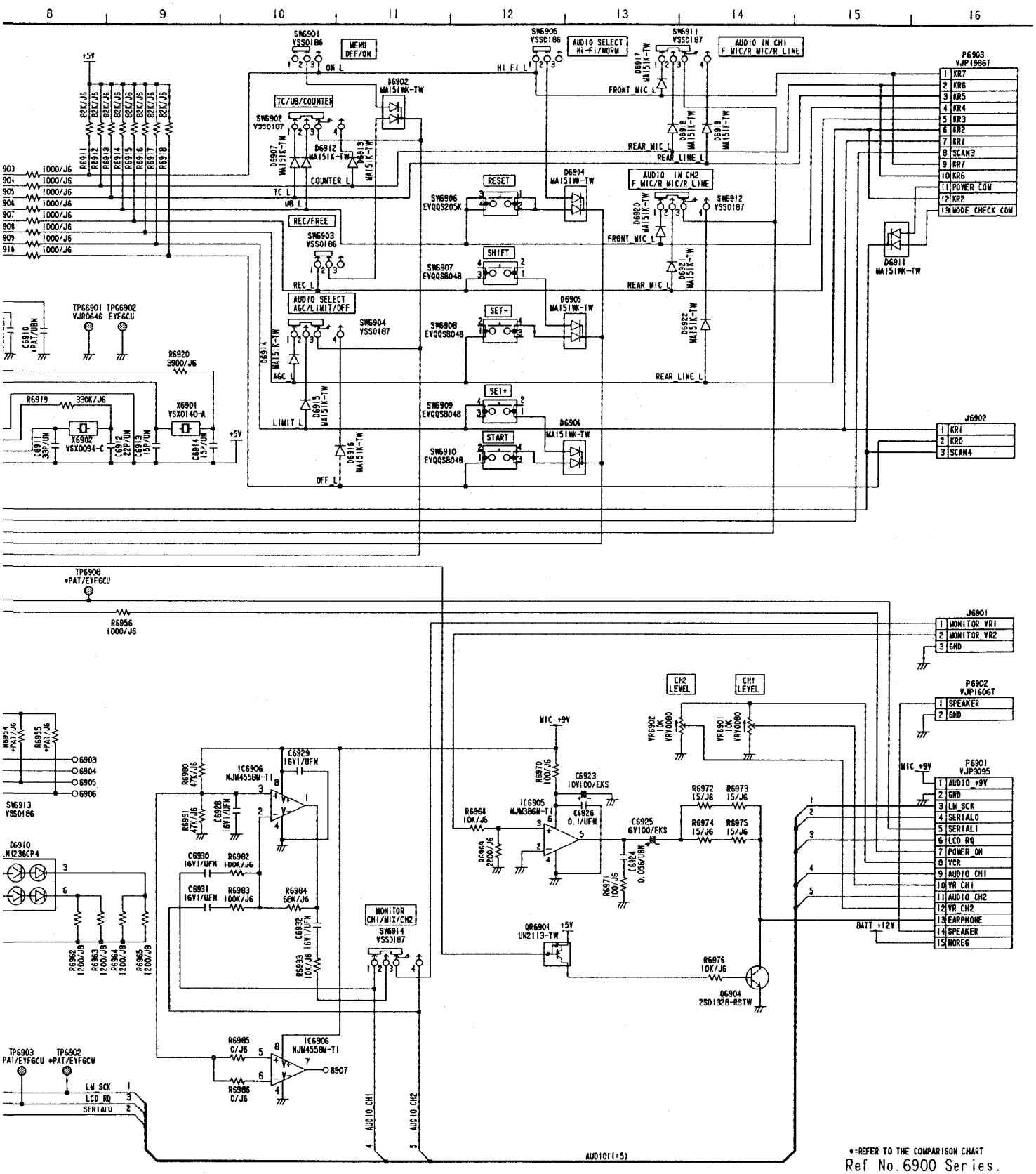

*=REFER TO THE COMPARISON CHART

Ref No.6900 Series.

REF	NTSC	PAL
C6903	*PAT/UBN	*PAT/UBN
C6904	*PAT/UBN	*PAT/UBN
C6905	*PAT/UBN	*PAT/UBN
C6906	*PAT/UBN	*PAT/UBN
C6907	*PAT/UBN	*PAT/UBN
C6908	*PAT/UBN	*PAT/UBN
C6909	*PAT/UBN	*PAT/UBN
C6910	*PAT/UBN	*PAT/UBN
IC6907	*PAT	*PAT
R6944	*PAT/J6	*PAT/J6
R6952	*PAT/J6	*PAT/J6
R6953	*PAT/J6	*PAT/J6
R6954	*PAT/J6	*PAT/J6
R6955	*PAT/J6	*PAT/J6
R6979	*PAT/J6	*PAT/J6
SR6901	*PAT	*PAT
TP6901	*PAT	*PAT
TP6902	*PAT	*PAT
TP6903	*PAT	*PAT
TP6904	*PAT	*PAT
TP6908	*PAT	*PAT

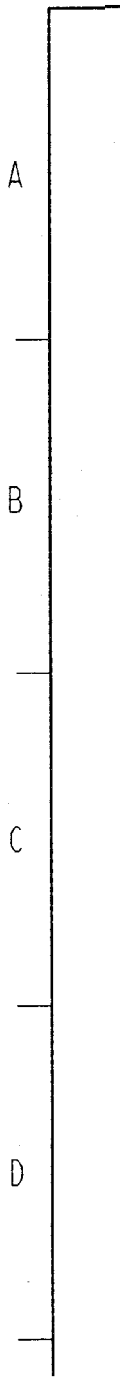

POWER SW SCHEMATIC DIAGRAM 1／1 (E26:Page CBA-8)

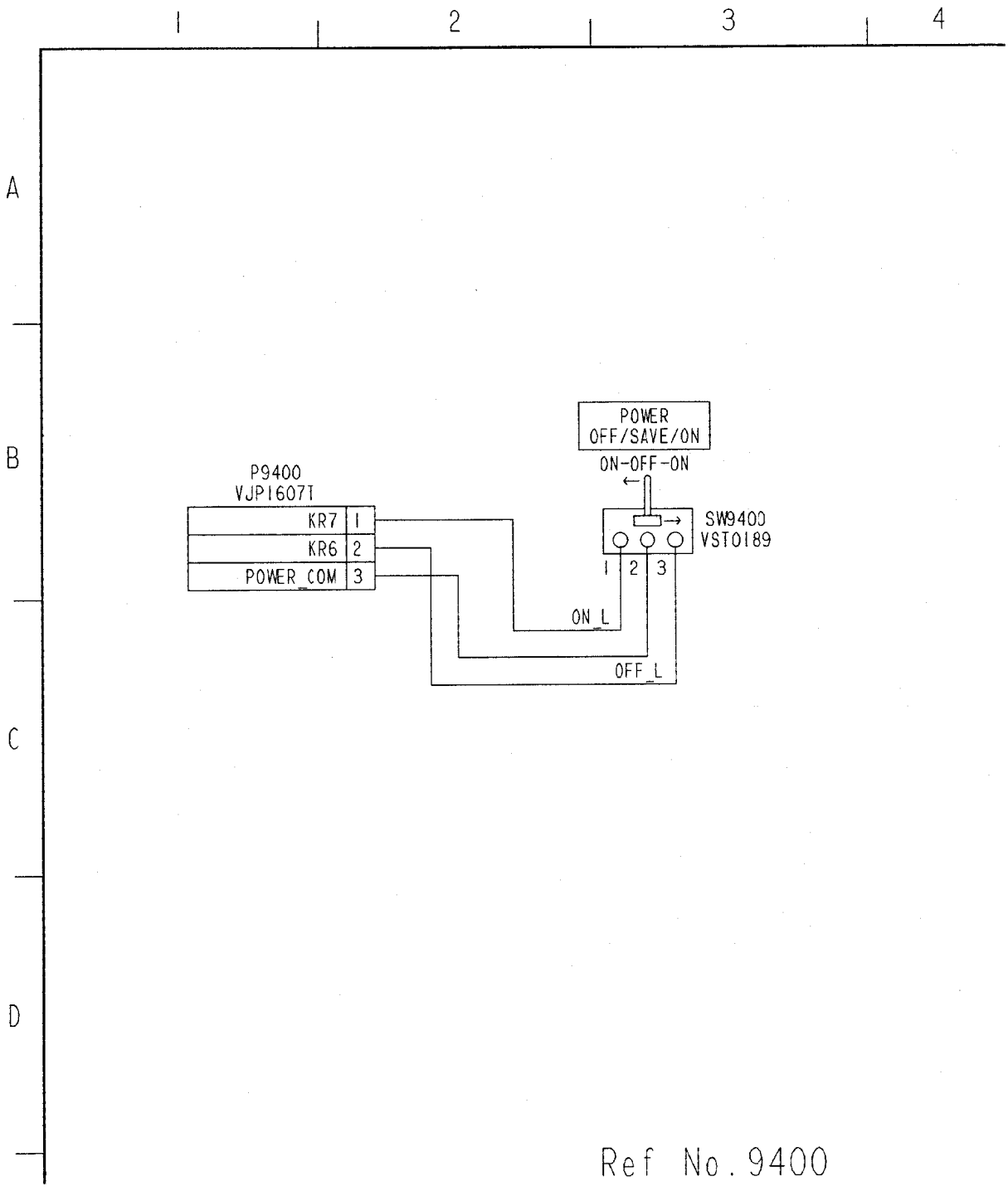

Ref No.9400

SUPER IRIS SCHEMATIC DIAGRAM 1／1 (E27:Page CBA-9)

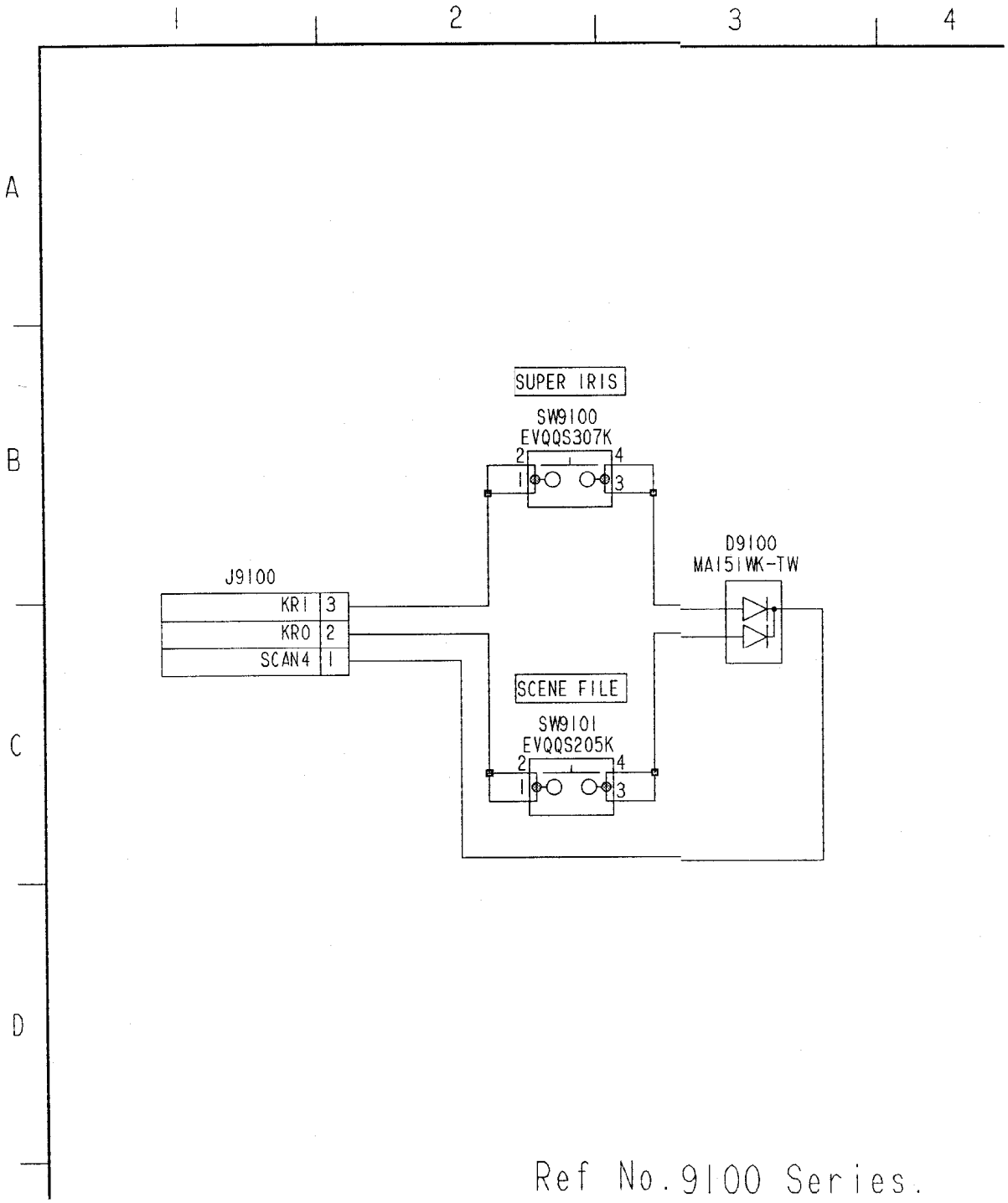

Ref No.9100 Series.

MONITOR VR SCHEMATIC DIAGRAM 1／1 (E28:Page CBA-9)

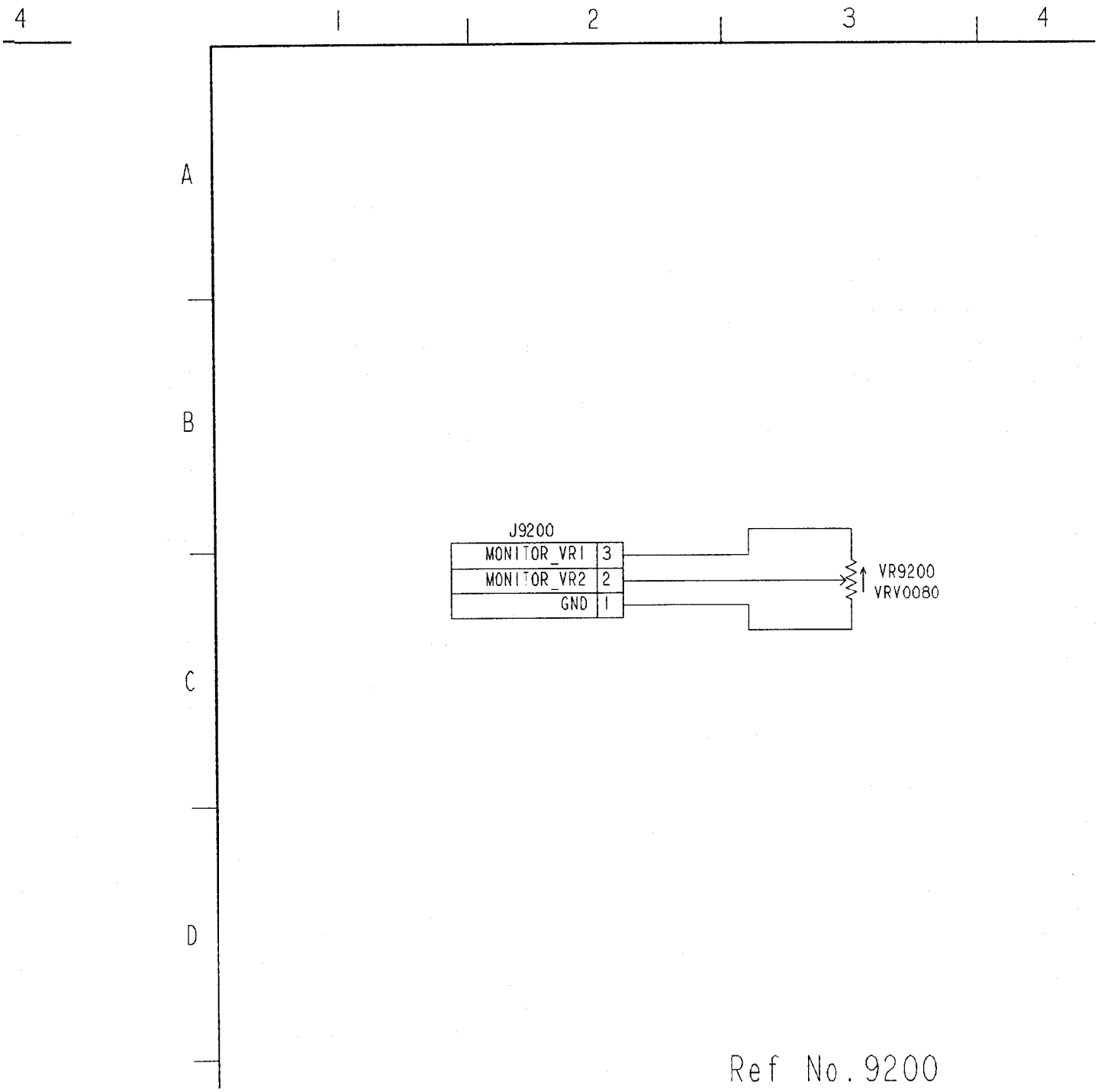

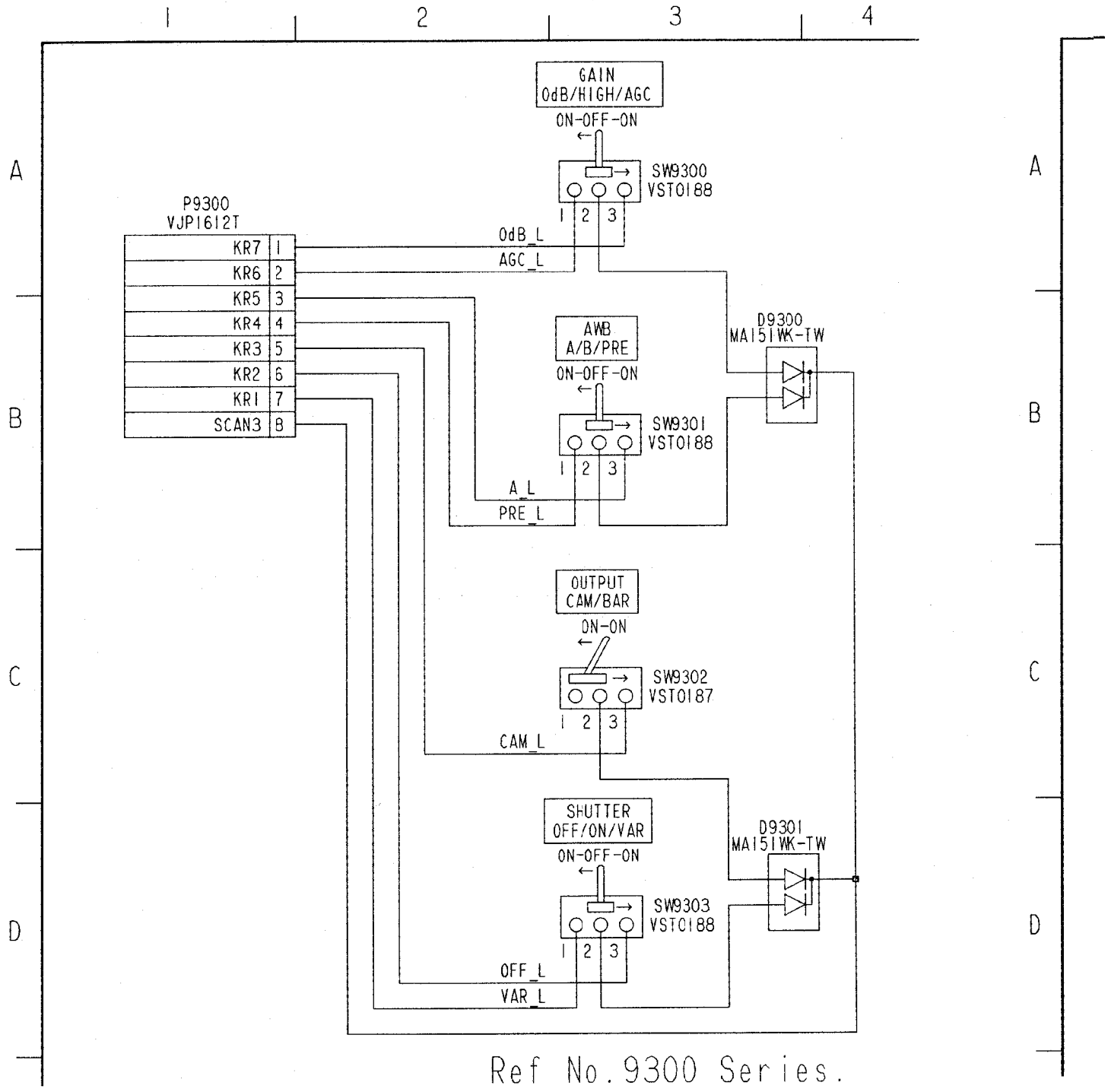
1
2
3
4
A
B
C
D
GAIN
0dB/HIGH/AGC
ON-OFF-ON
SW9300
VST0188
P9300
VJP1612T
KR7 1
KR6 2
KR5 3
KR4 4
KR3 5
KR2 6
KR1 7
SCAN3 8
0dB_L
AGC_L
AWB
A/B/PRE
ON-OFF-ON
SW9301
VST0188
D9300
MA151WK-TW
A_L
PRE_L
OUTPUT
CAM/BAR
ON-ON
SW9302
VST0187
CAM_L
SHUTTER
OFF/ON/VAR
ON-OFF-ON
SW9303
VST0188
D9301
MA151WK-TW
OFF_L
VAR_L
Ref No.9300 Series.

MODE CHEAK SCHEMATIC DIAGRAM 1／1 (E25:Page CBA-8)

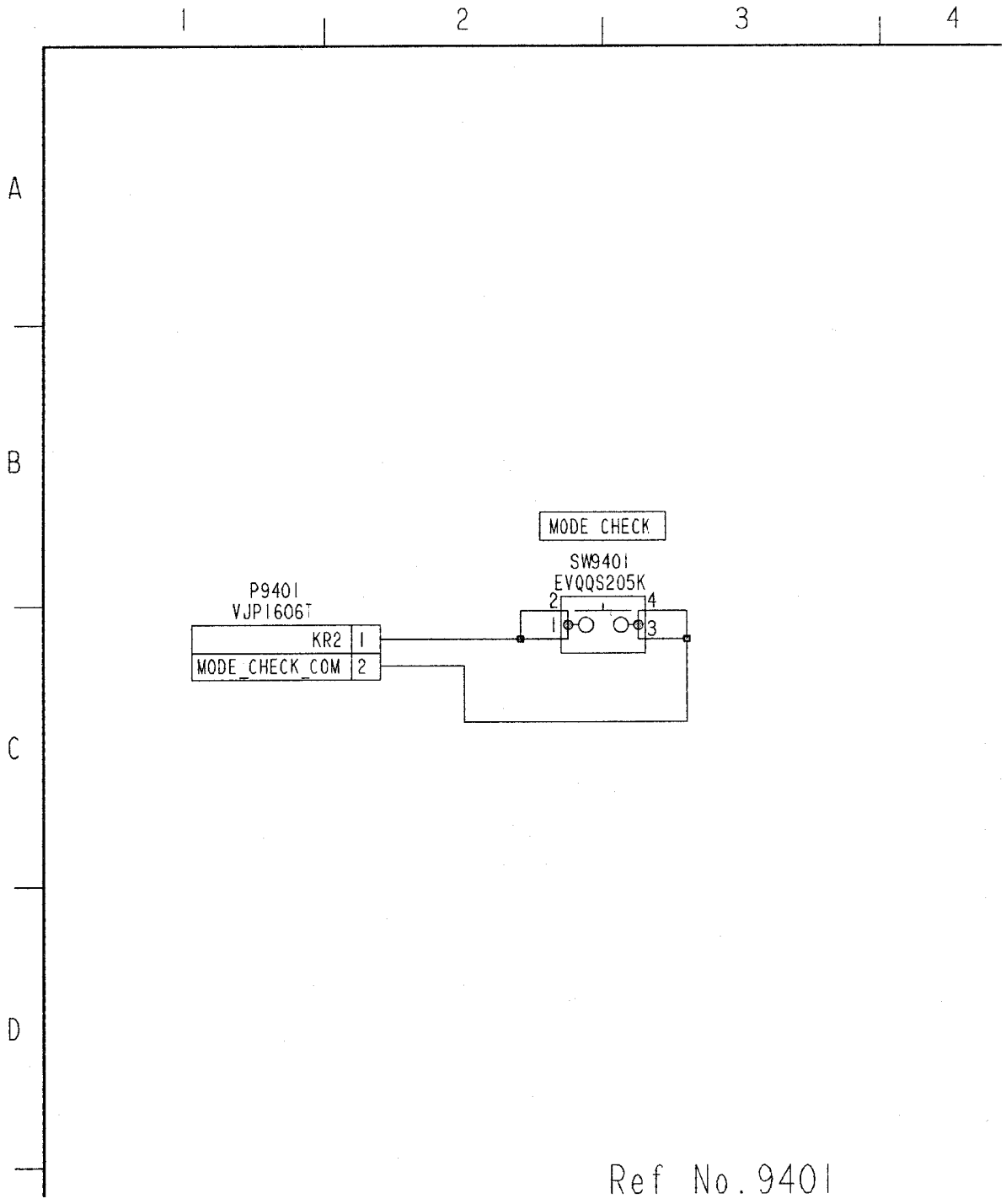

Ref No.9401

PROCESS SCHEMATIC DIAGRAM 1／12（E15:Page CBA-10）

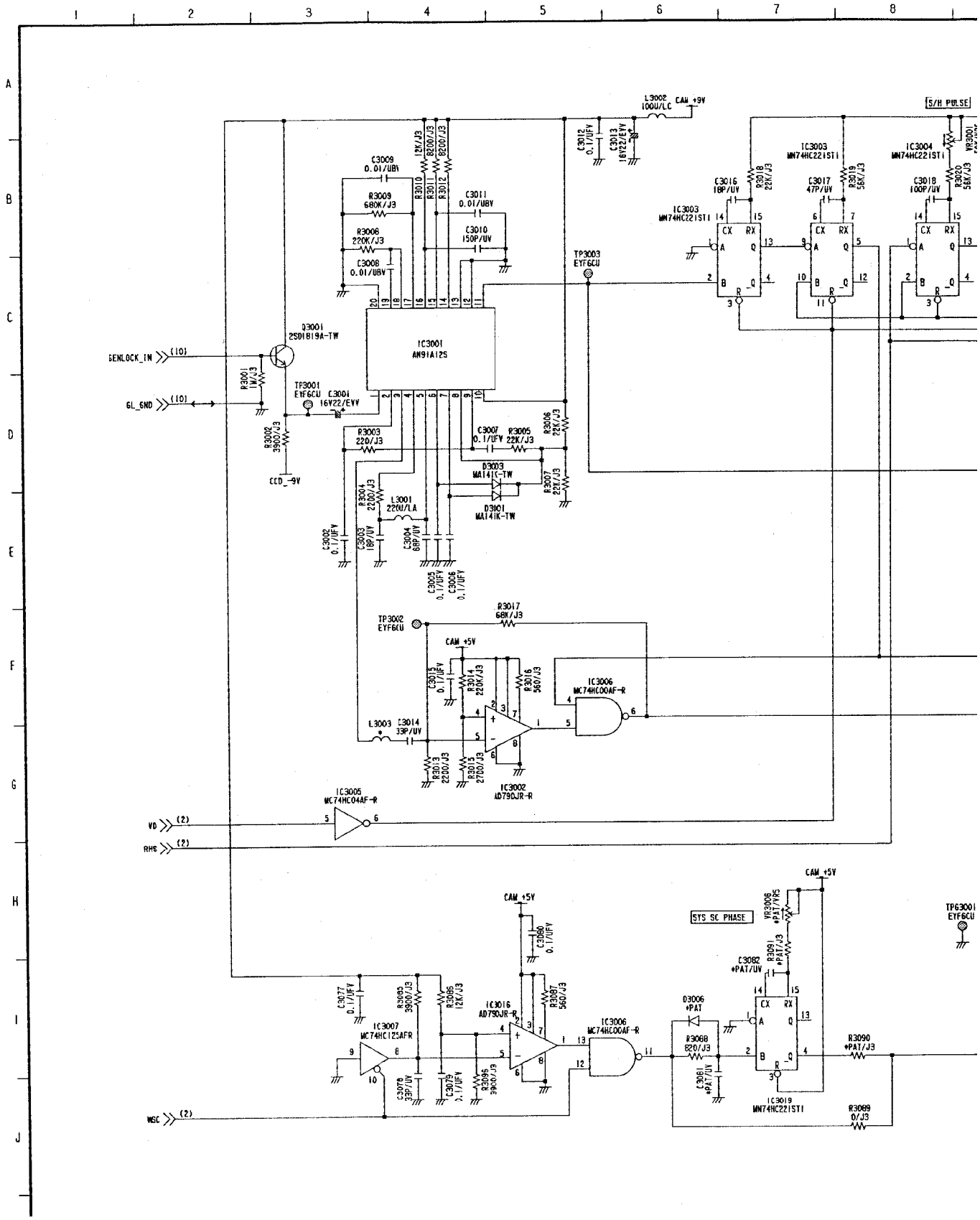

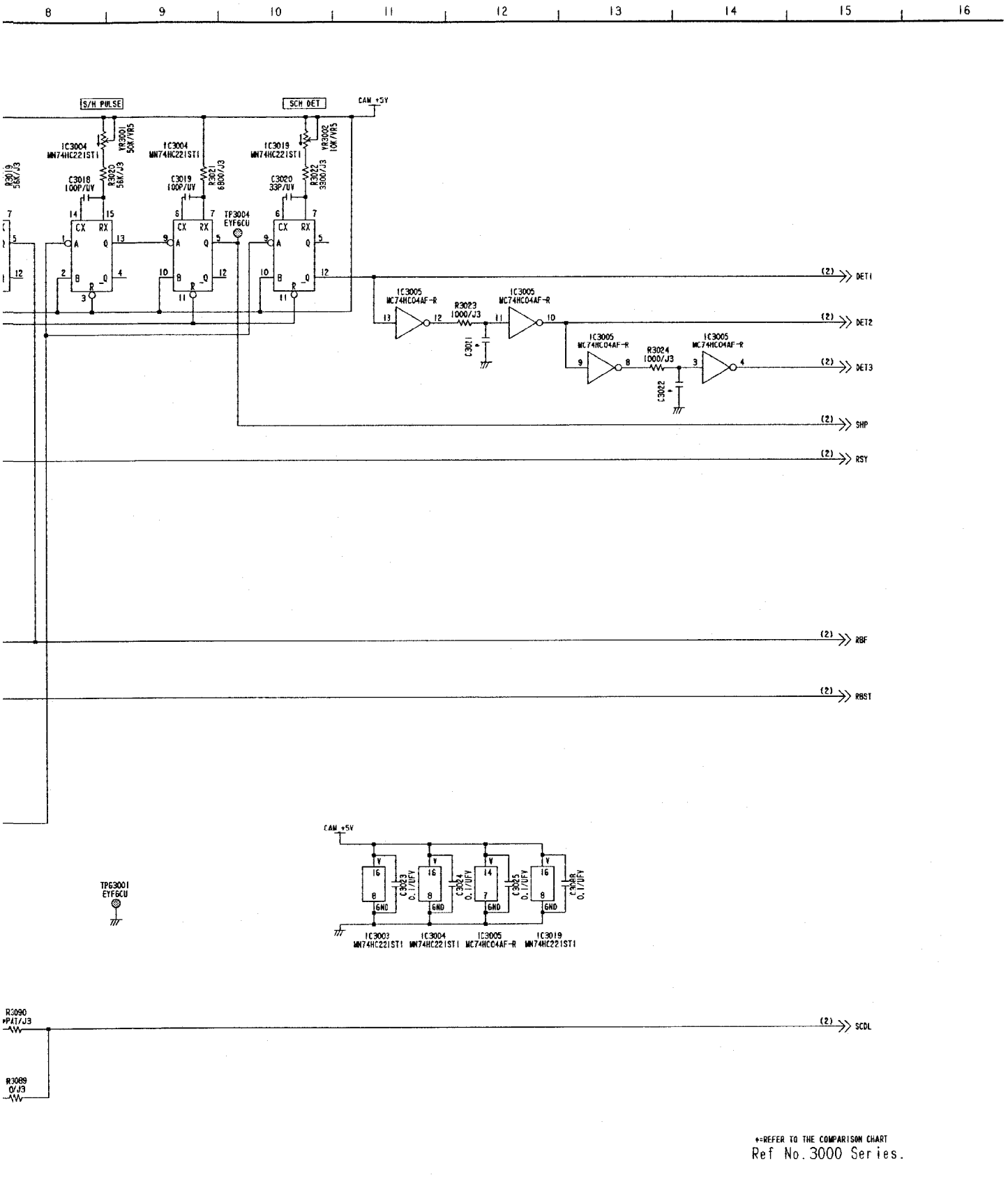

*=REFER TO THE COMPARISON CHART
Ref No. 3000 Series.

PROCESS SCHEMATIC DIAGRAM 2／12（E15:Page CBA-10）

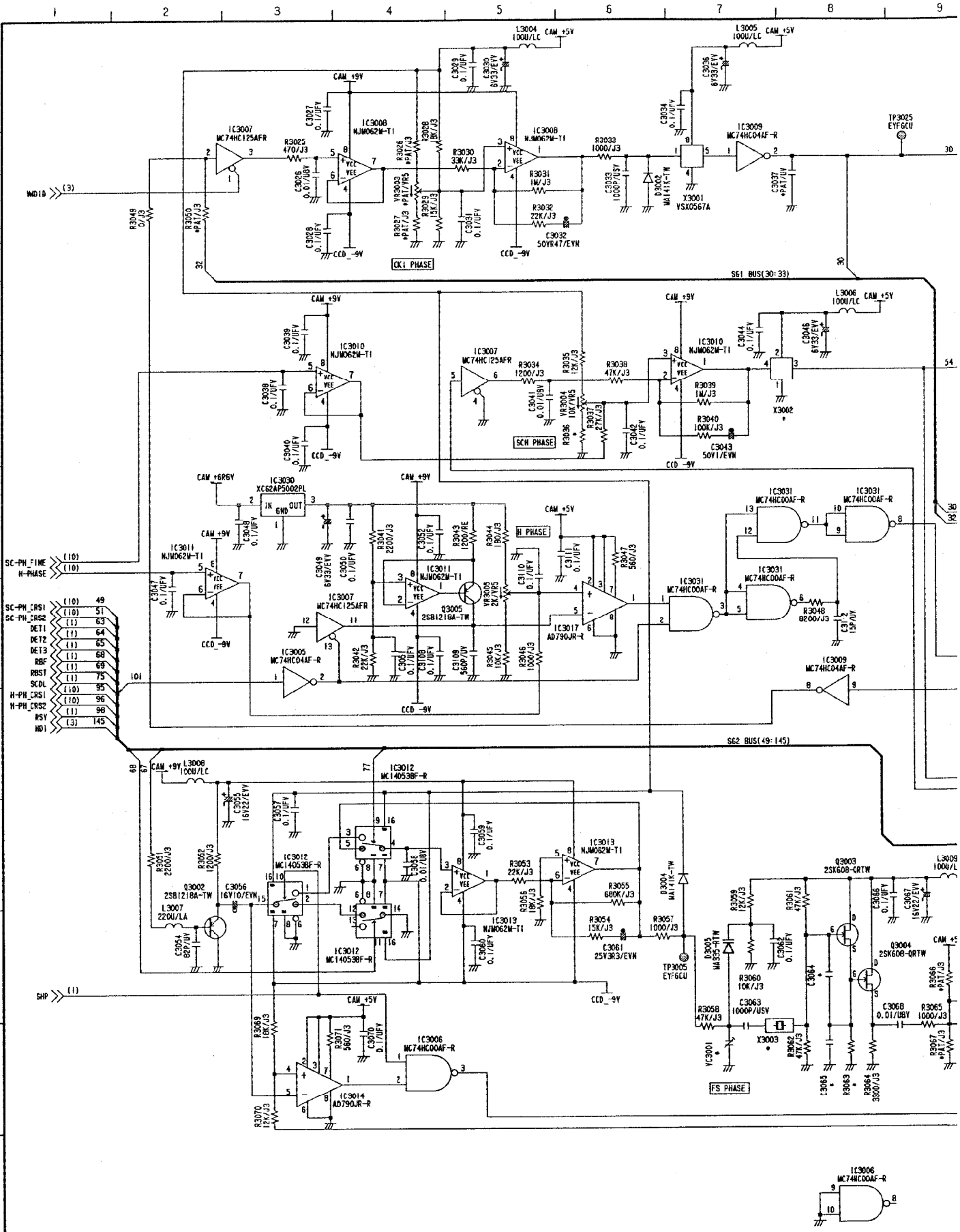

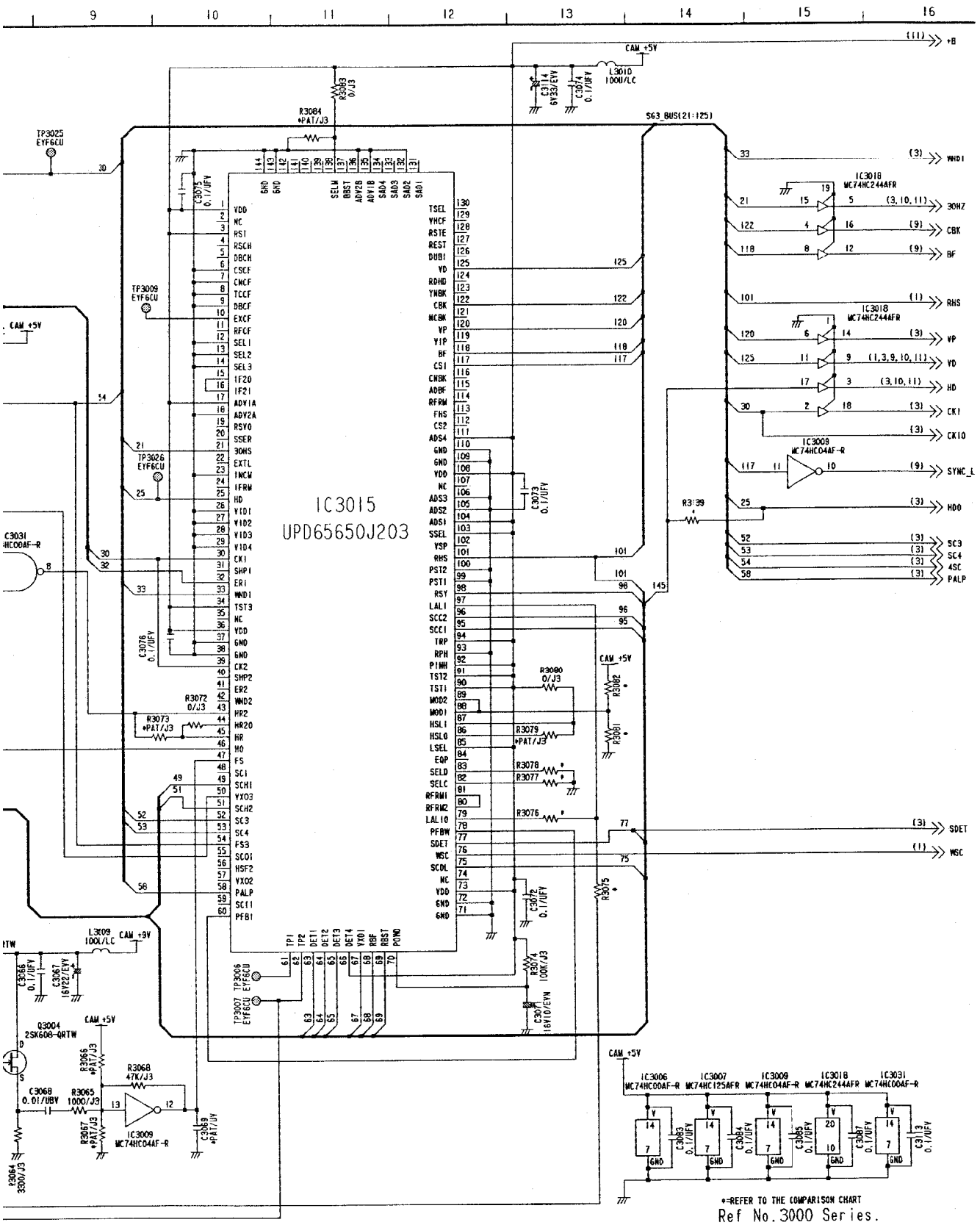
IC3015
UPD65650J203
S63_BUS(21:125)
CAM +5V
+8
WND1
3DHZ
CBK
BF
RHS
VP
YD
HD
CK1
CK10
SYNC_L
HDO
SC3
SC4
4SC
PALP
SDET
WSC
IC3018
MC74HC244AFR
IC3009
MC74HC04AF-R
R3084 *PAT/J3
R3083 0/J3
R3080 0/J3
R3079 *PAT/J3
R3078 *
R3077 *
R3076 *
R3074 100K/J3
R3075 *
R3072 0/J3
R3073 *PAT/J3
R3139
L3010 1000/LC
L3009 100/LC
TP3025 EYF6CU
TP3009 EYF6CU
TP3026 EYF6CU
TP3006 EYF6CU
TP3007 EYF6CU
Q3004 2SK608-QRTW
R3068 47K/J3
R3065 1000/J3
R3066 *PAT/J3
R3067 *PAT/J3
R3064 3300/J3
C3068 0.01/UBY
C3069 *PAT/J3
C3066 0.1/UFV
C3067 16Y22/EYV
C3073 0.1/UFV
C3074 0.1/UFV
C3075 0.1/UFV
C3076 0.1/UFV
C3077 0.1/UFV
C3078 16V10/EYN
C3114 6Y33/EYV
IC3006 MC74HC00AF-R
IC3007 MC74HC125AFR
IC3031 MC74HC00AF-R
C3083 0.1/UFV
C3084 0.1/UFV
C3085 0.1/UFV
C3087 0.1/UFV
C3113 0.1/UFV
*=REFER TO THE COMPARISON CHART
Ref No.3000 Series.

PROCESS SCHEMATIC DIAGRAM 3／12（E15:Page CBA-10 ）

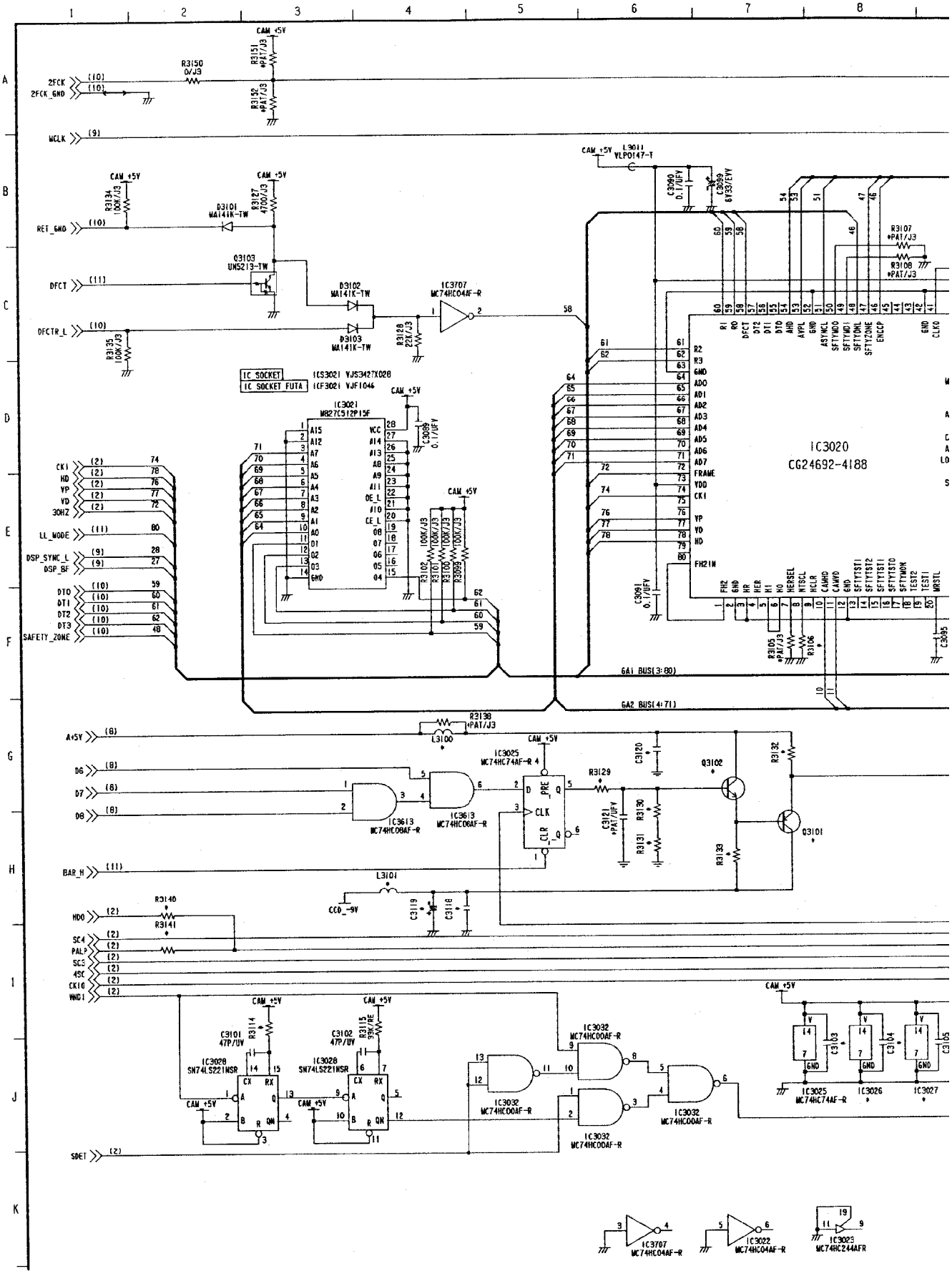

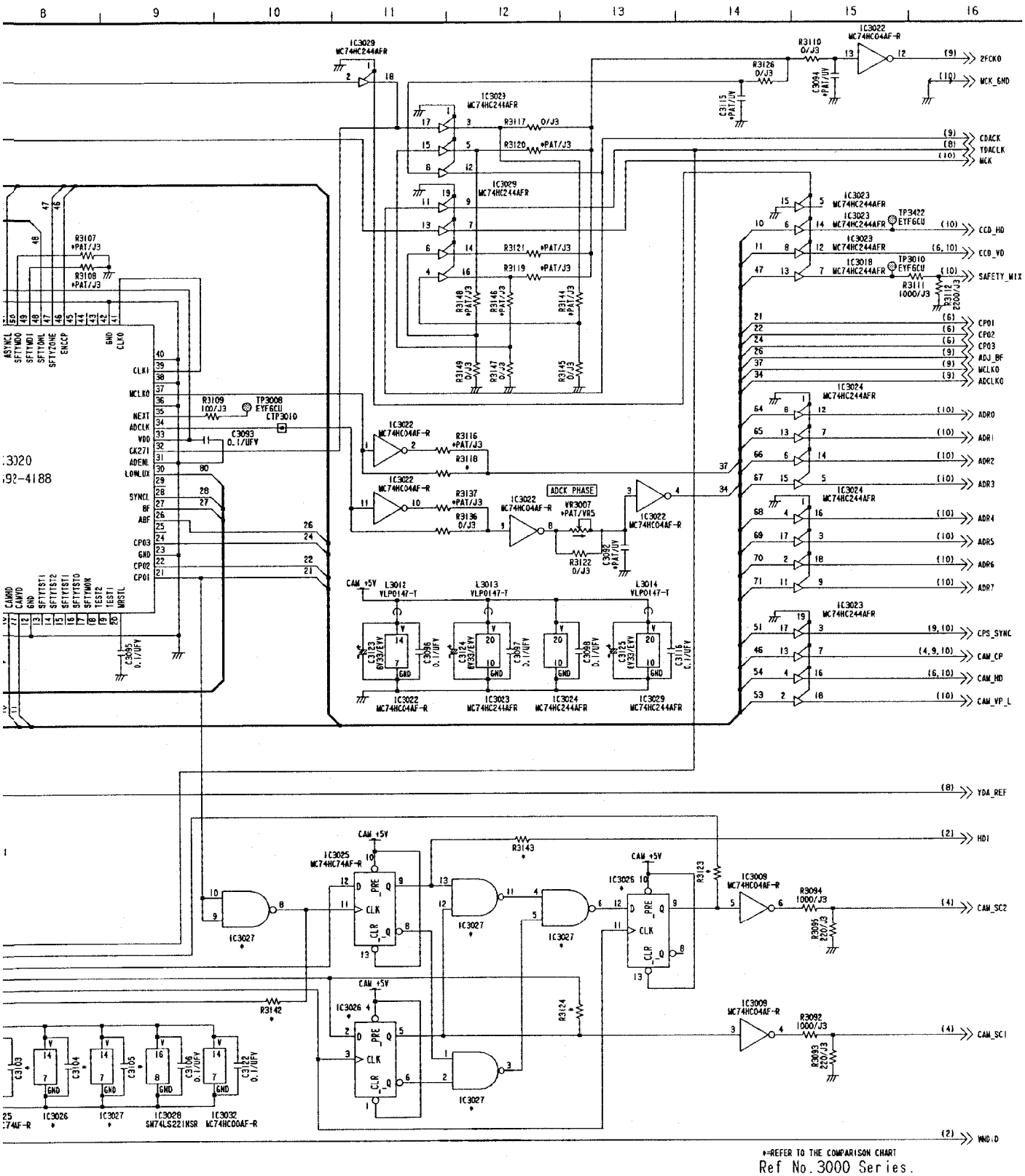
8
9
10
11
12
13
14
15
16
IC3029 MC74HC244AFR
IC3023 MC74HC244AFR
IC3022 MC74HC04AF-R
IC3024 MC74HC244AFR
R3110 0/J3
R3126 0/J3
C3115 *PAT/UV
C3094 *PAT/UV
2FCKO
MCK_GND
R3117 0/J3
R3120 *PAT/J3
R3121 *PAT/J3
R3119 *PAT/J3
R3148 *PAT/J3
R3146 *PAT/J3
R3144 *PAT/J3
R3149 0/J3
R3147 0/J3
R3145 0/J3
CDACK
TDACLK
MCK
R3107 *PAT/J3
R3108 *PAT/J3
R3109 100/J3
TP3008 EYF6CU
CTP3010
C3093 0.1/UFV
R3116 *PAT/J3
R3118 *
R3137 *PAT/J3
R3136 0/J3
ADCK PHASE
VR3007 *PAT/VR5
R3122 0/J3
C3092 *PAT/UV
CAM +5V
L3012 VLP0147-T
L3013 VLP0147-T
L3014 VLP0147-T
C3123 6V33/EVV
C3124 6V33/EVV
C3125 6V33/EVV
C3096 0.1/UFV
C3097 0.1/UFV
C3098 0.1/UFV
C3116 0.1/UFV
C3095 0.1/UFV
TP3422 EYF6CU
TP3010 EYF6CU
R3111 1000/J3
R3112 2200/J3
CCD_HD
CCD_VD
SAFETY_MIX
CPO1
CPO2
CPO3
ADJ_BF
WCLKO
ADCLKO
ADR0
ADR1
ADR2
ADR3
ADR4
ADR5
ADR6
ADR7
CPS_SYNC
CAM_CP
CAM_HD
CAM_VP_L
YDA_REF
HDI
R3143
IC3025 MC74HC74AF-R
IC3027
IC3026 10
R3123
IC3009 MC74HC04AF-R
R3094 1000/J3
R3096 220/J3
CAM_SC2
R3142
IC3026 4
R3124
R3092 1000/J3
R3093 220/J3
CAM_SCI
WHDLD
IC3026
IC3027
IC3028 SN74LS221NSR
IC3032 MC74HC00AF-R
*=REFER TO THE COMPARISON CHART
Ref No.3000 Series.

PROCESS SCHEMATIC DIAGRAM 4／12 (E15:Page CBA-10)

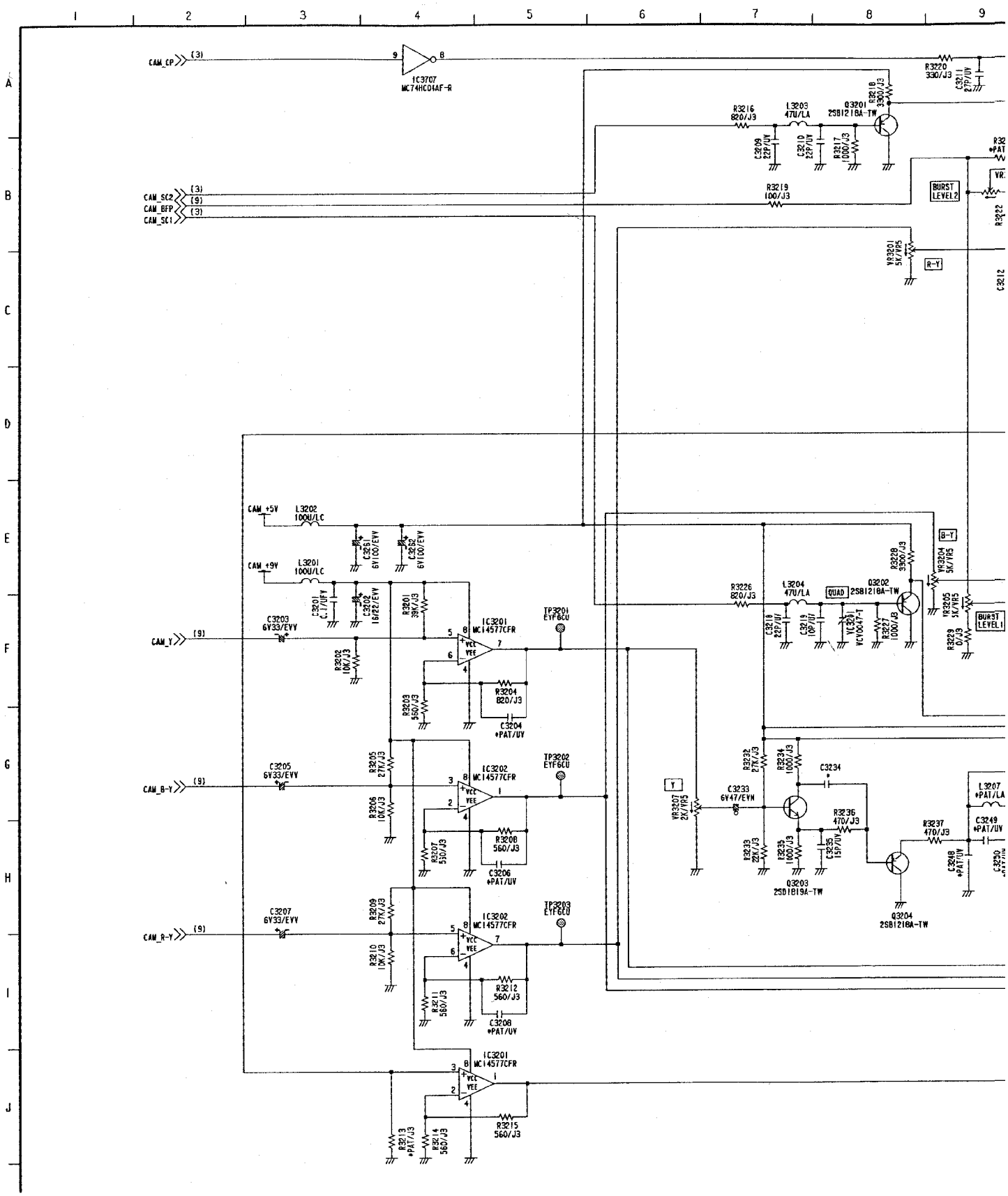

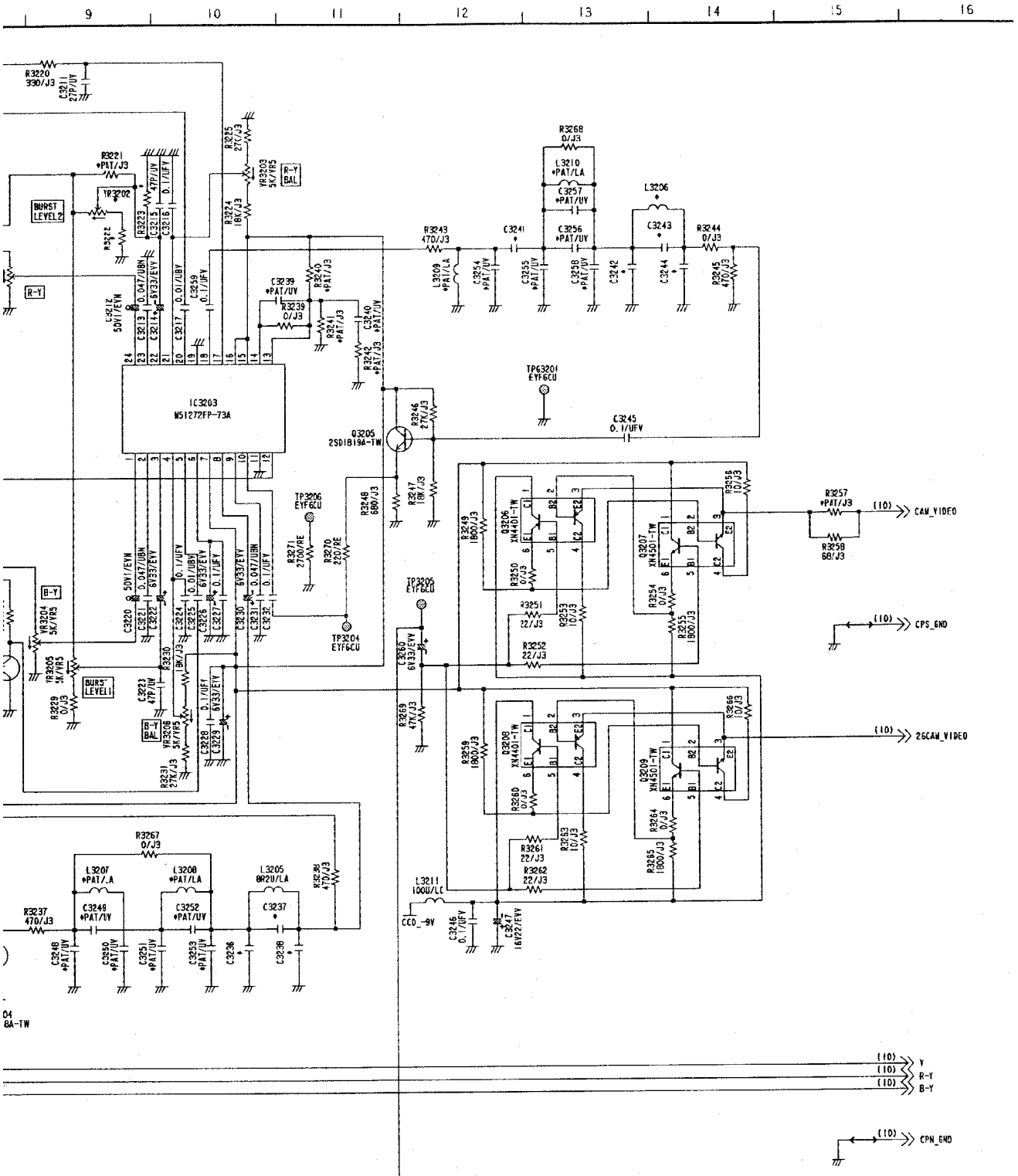

*=REFER TO THE COMPARISON CHART

Ref No.3200 Series.

PROCESS SCHEMATIC DIAGRAM 5／12 (E15:Page CBA-10)

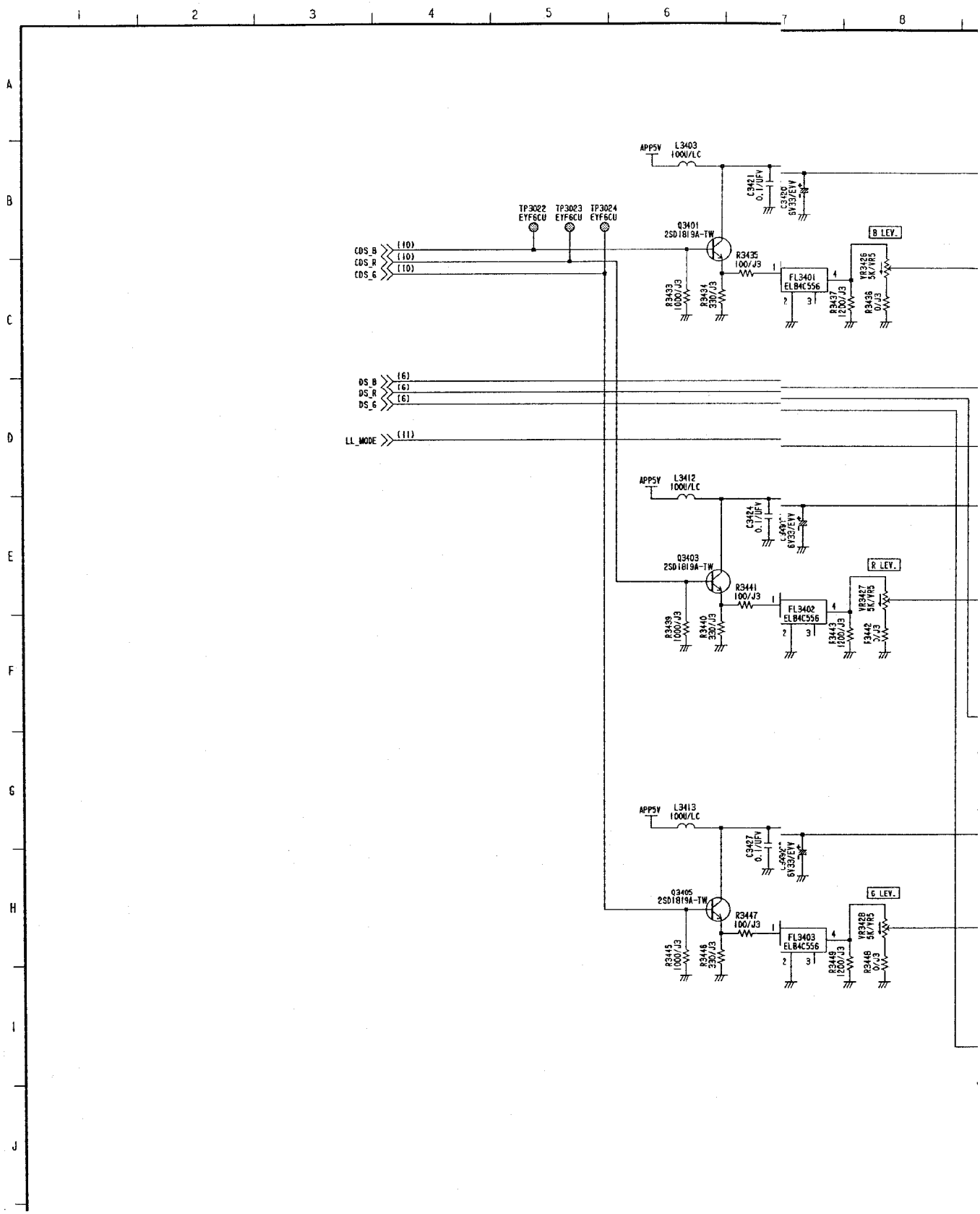

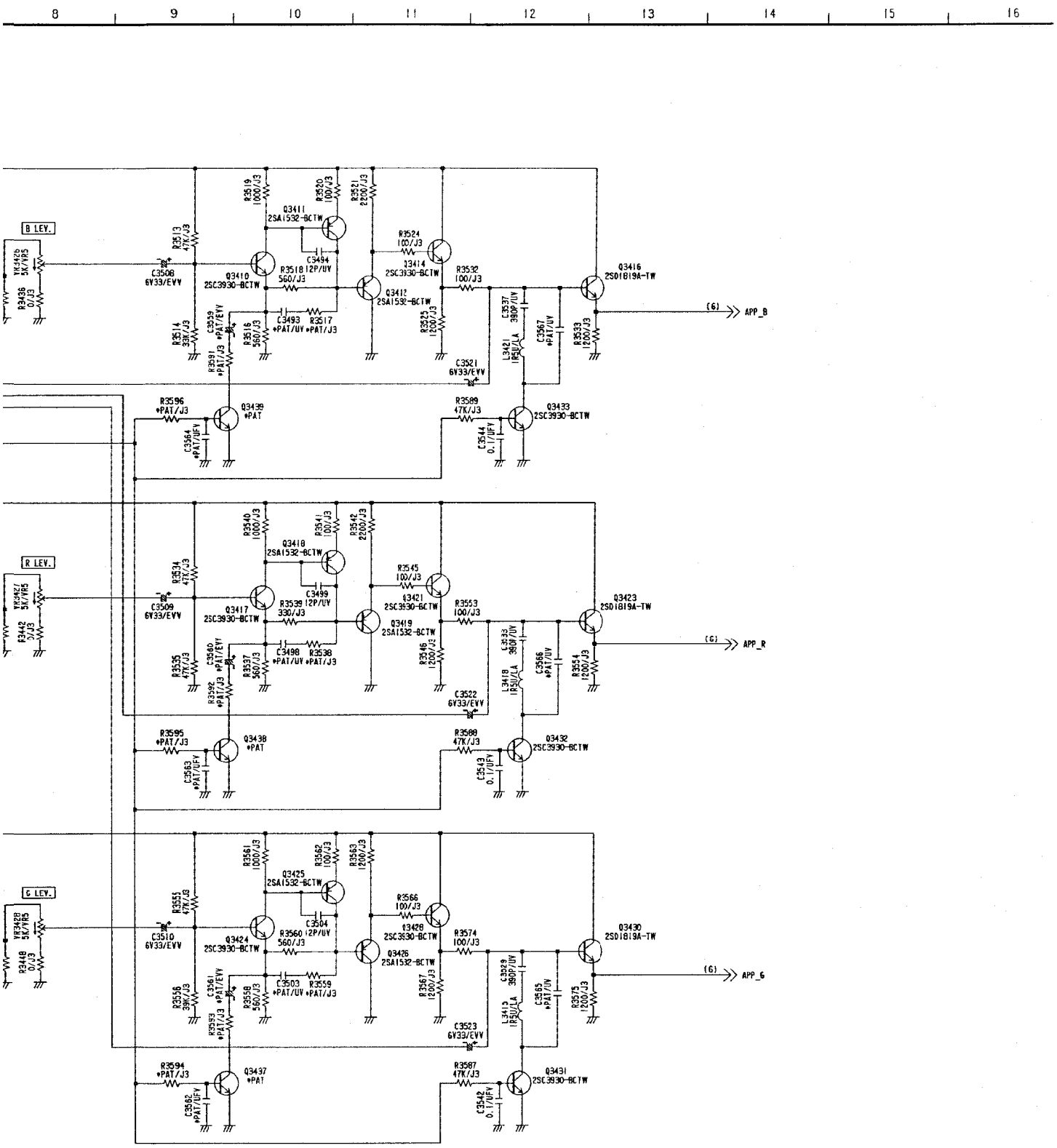

*=REFER TO THE COMPARISON CHART
Ref No.3400 Series.

PROCESS SCHEMATIC DIAGRAM 6／12 (E15:Page CBA-10)

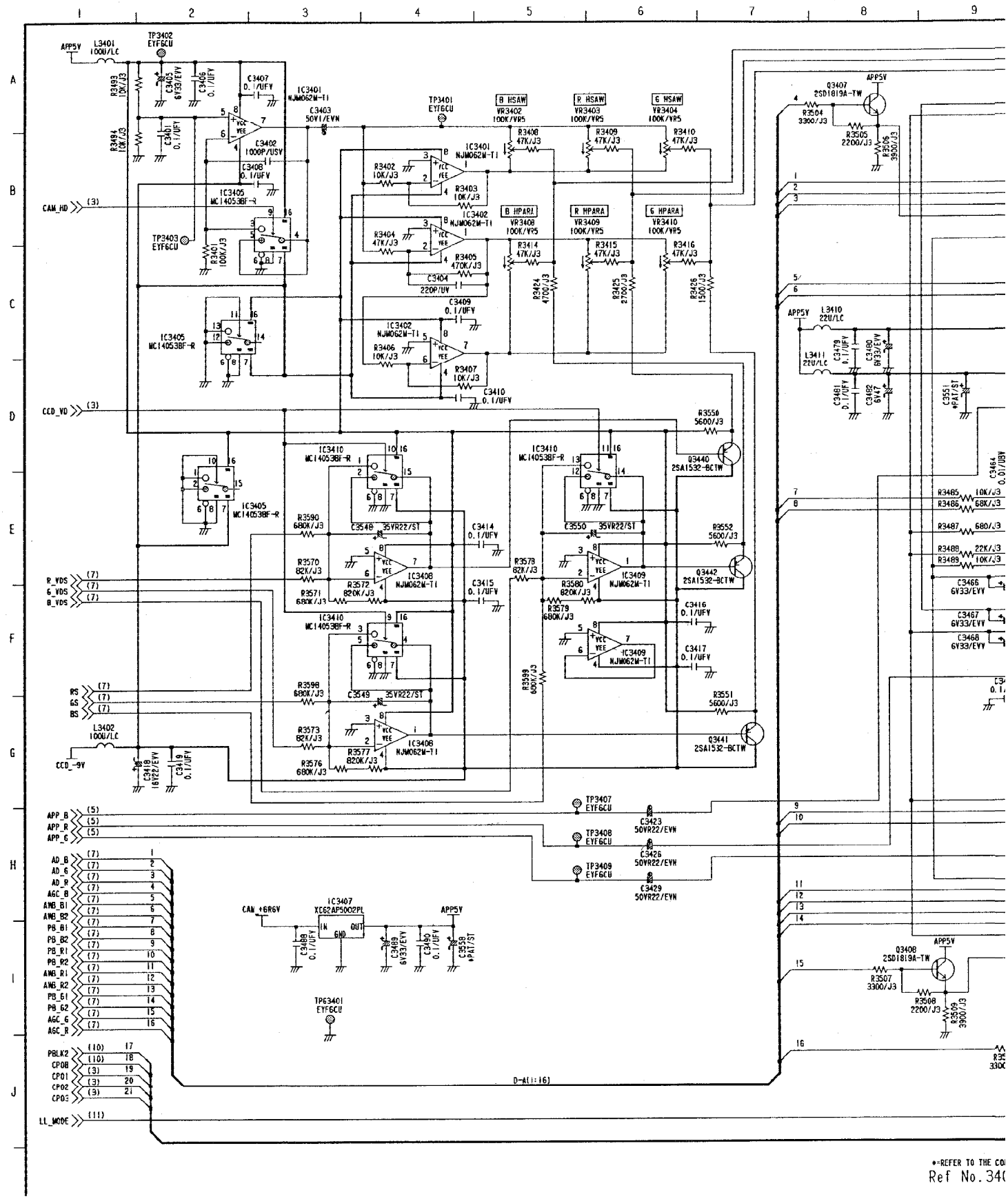

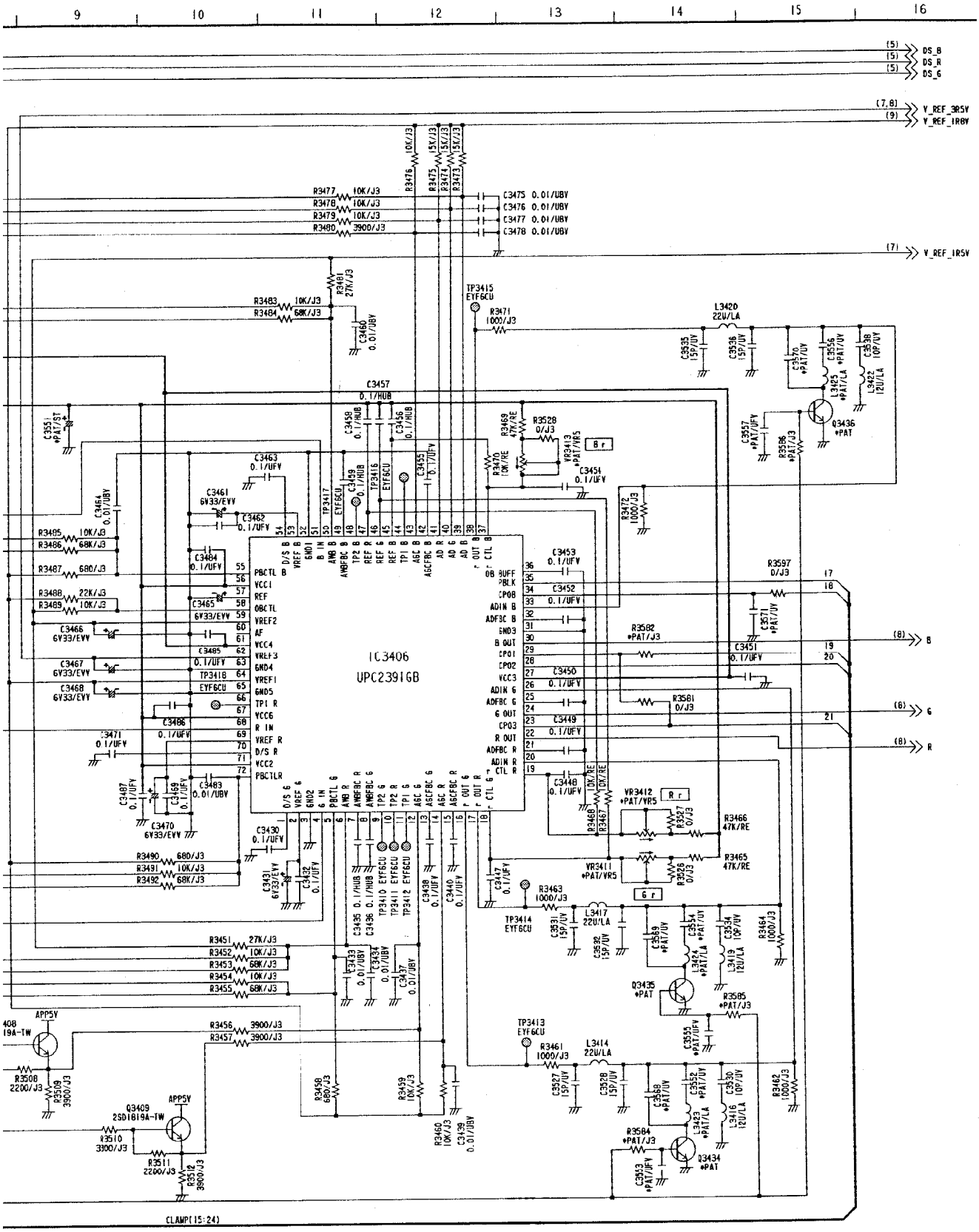

*=REFER TO THE COMPARISON CHART

Ref No.3400 Series.

PROCESS SCHEMATIC DIAGRAM 7／12（E15:Page CBA-10 ）

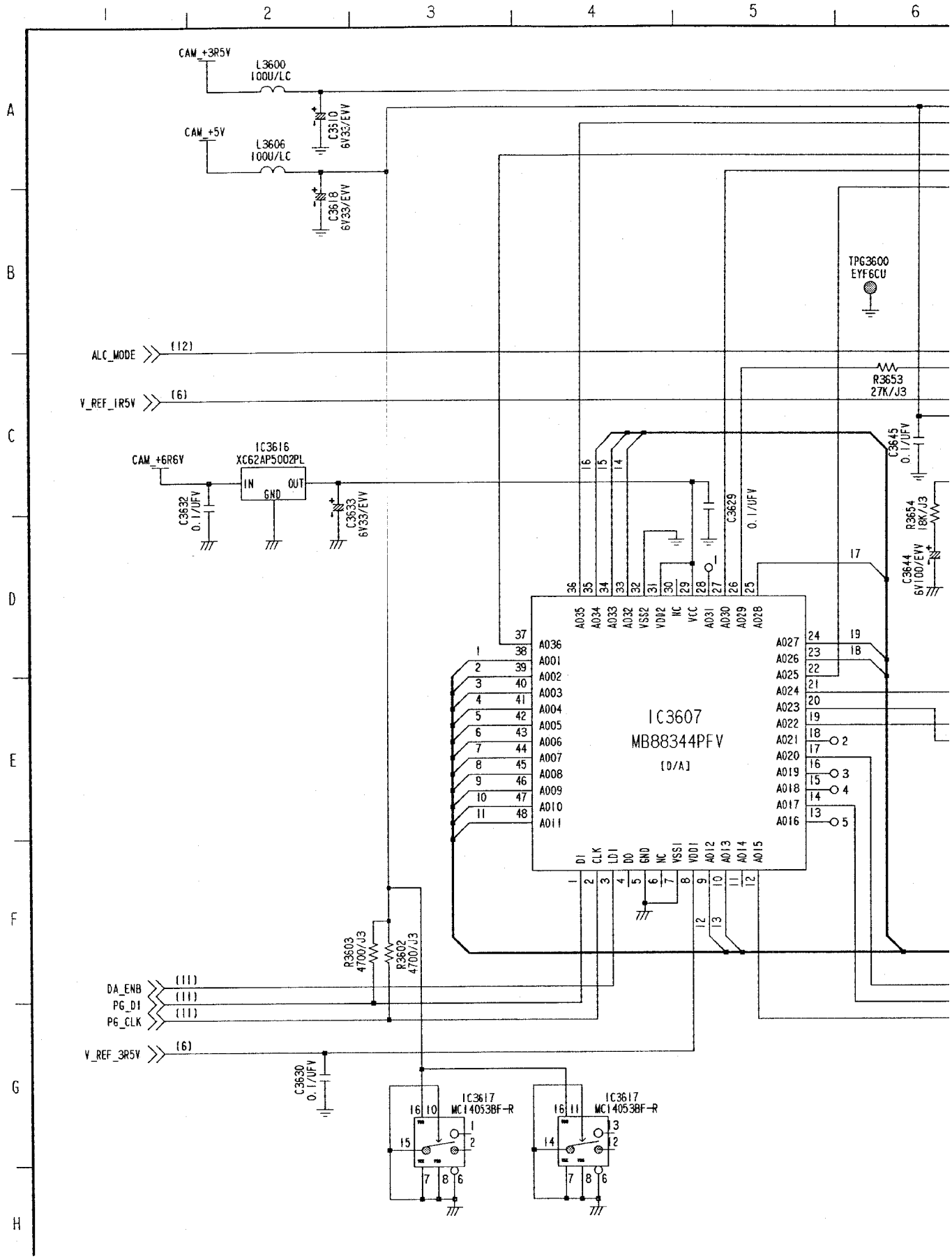

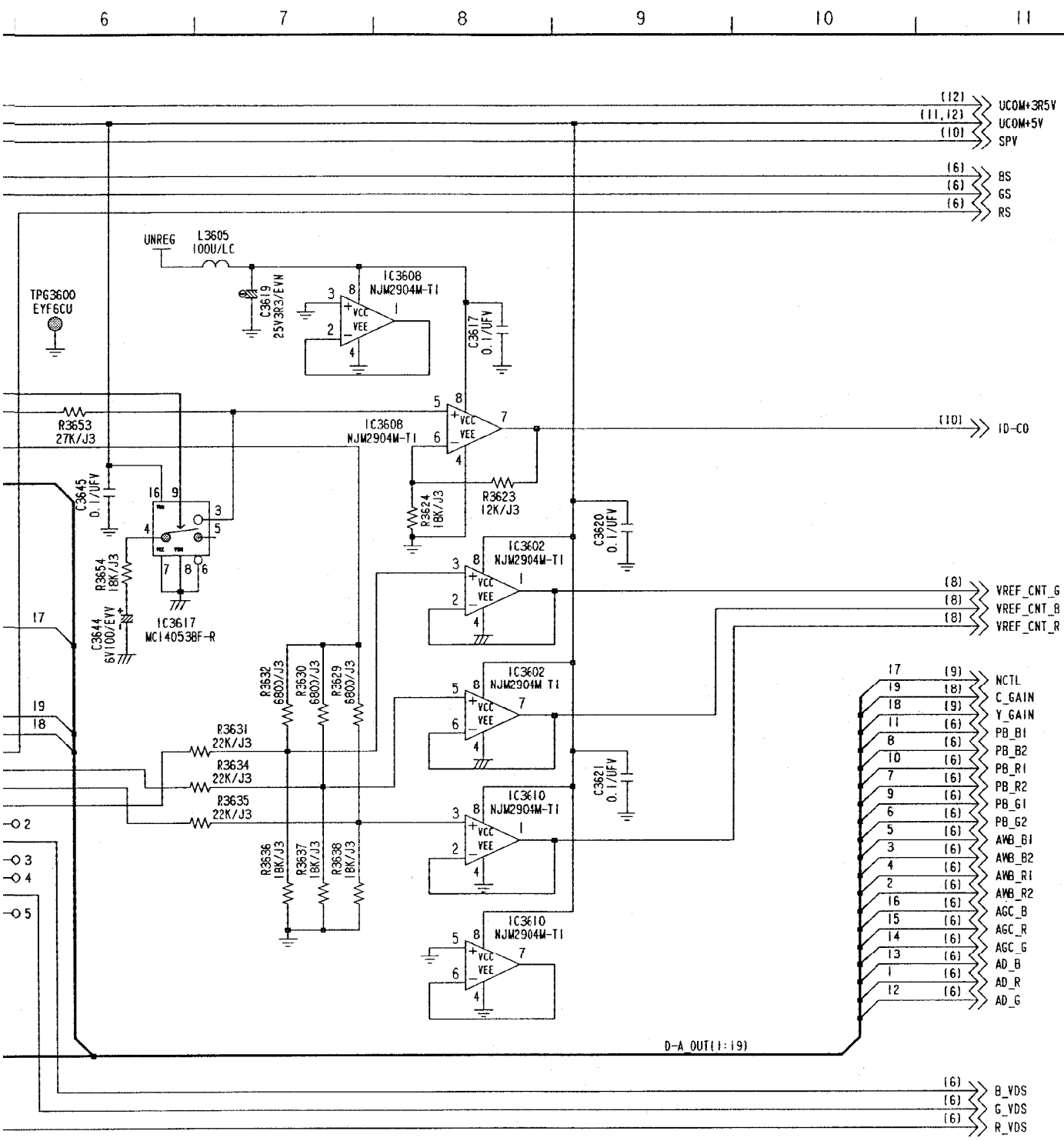

*=REFER TO THE COMPARISON CHART

Ref No.3000 Series.

PROCESS SCHEMATIC DIAGRAM 8／12 (E15:Page CBA-10)

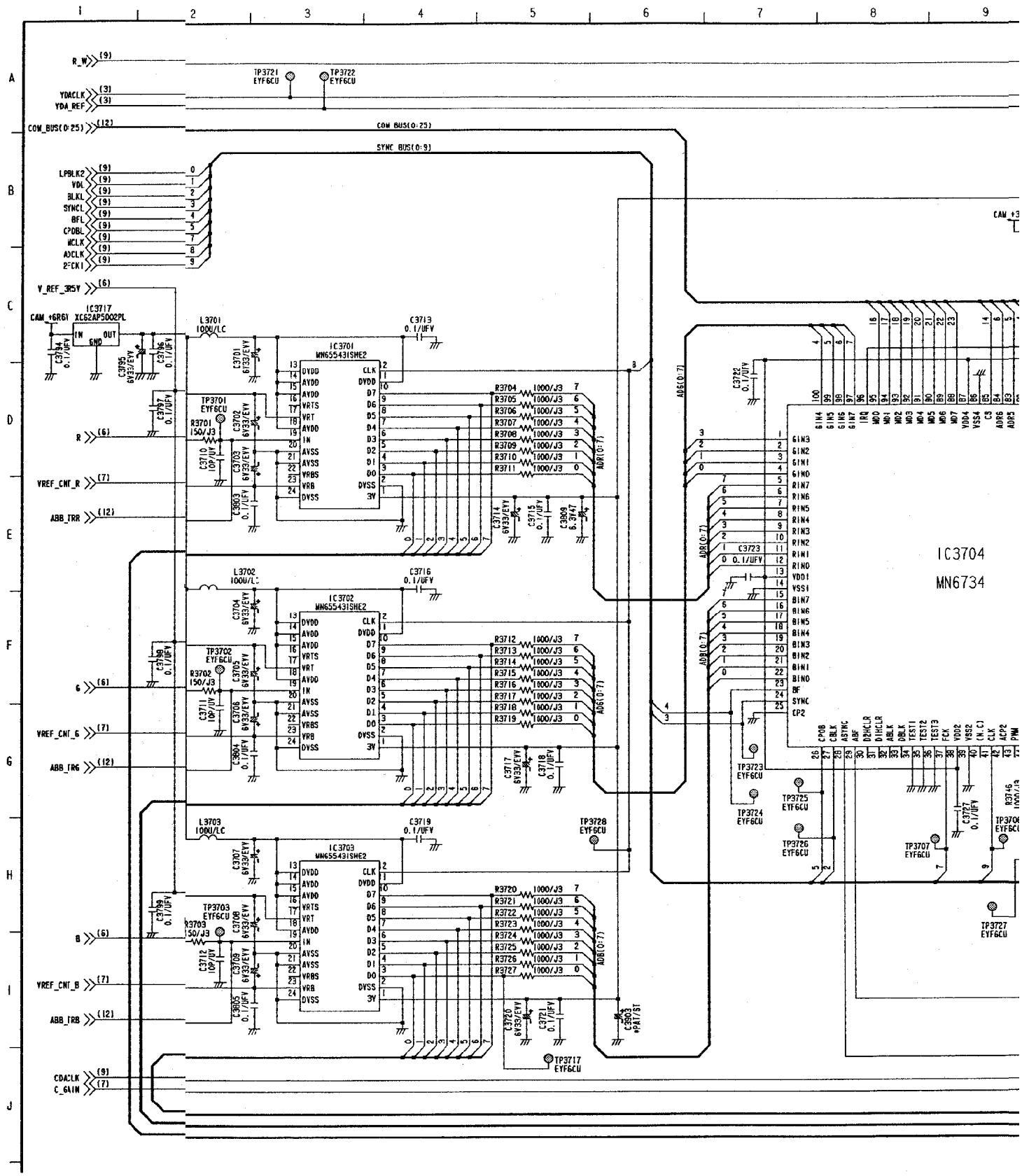

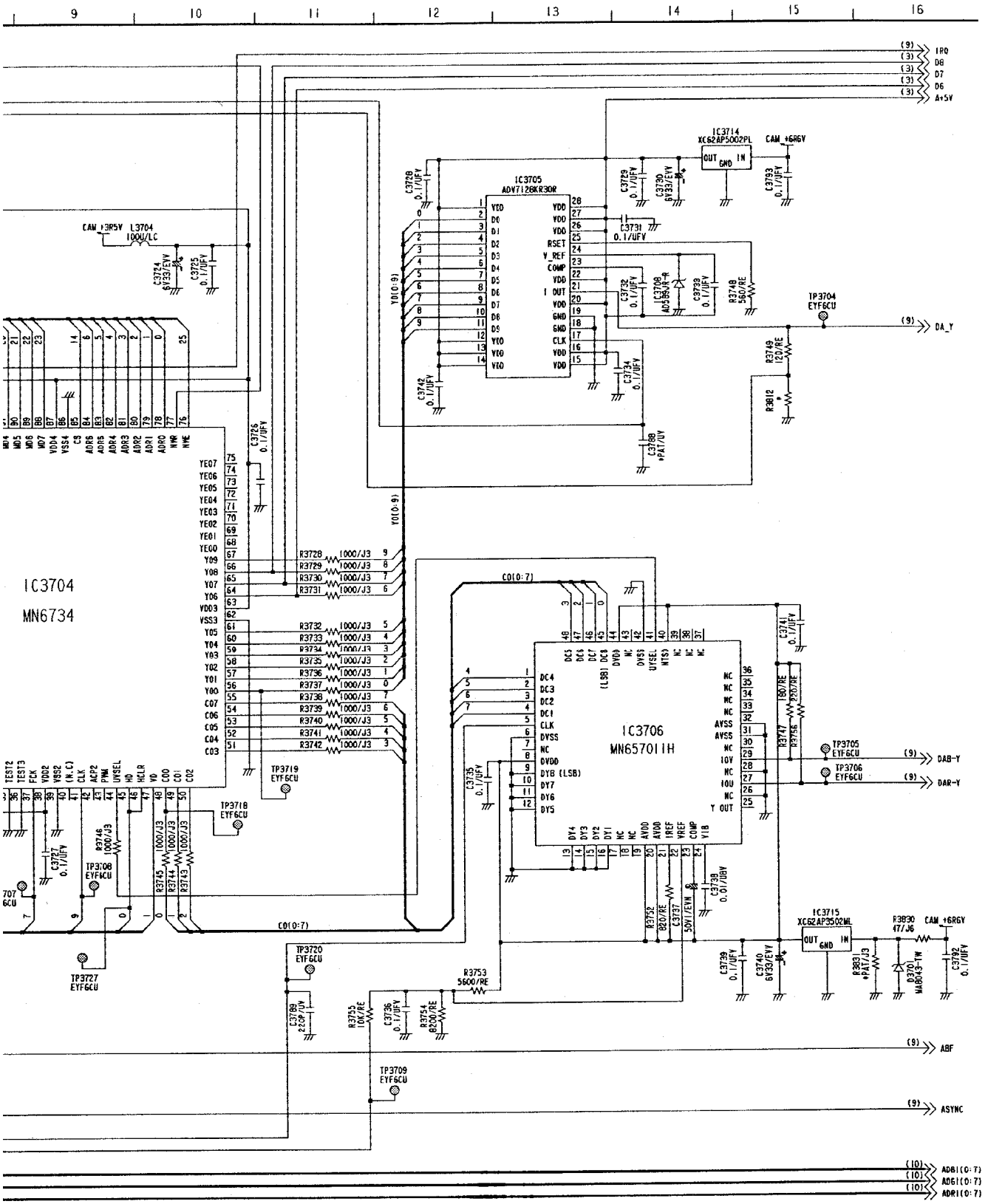

Ref No.3700 Series.

PROCESS SCHEMATIC DIAGRAM 9／12 (E15:Page CBA-10)

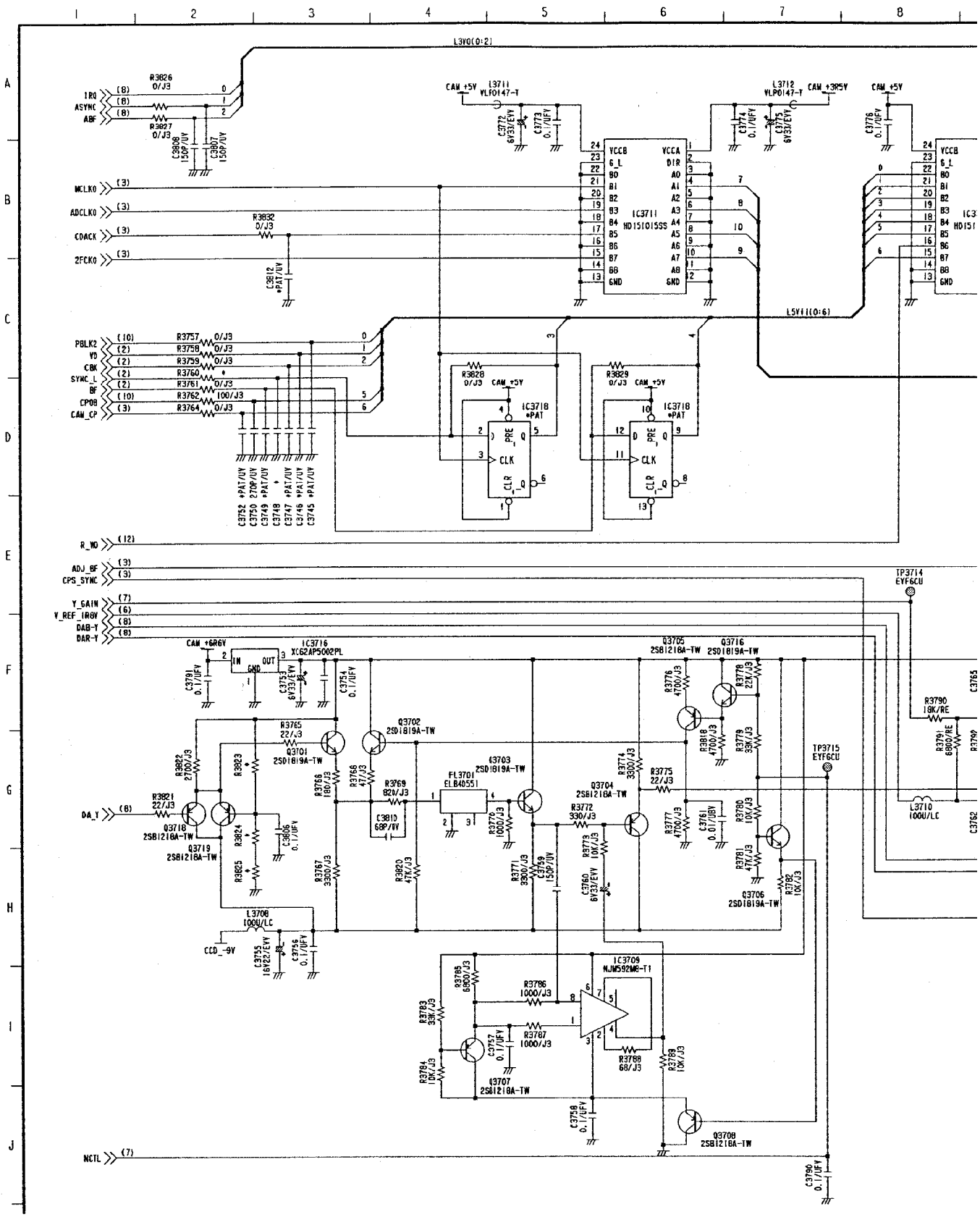

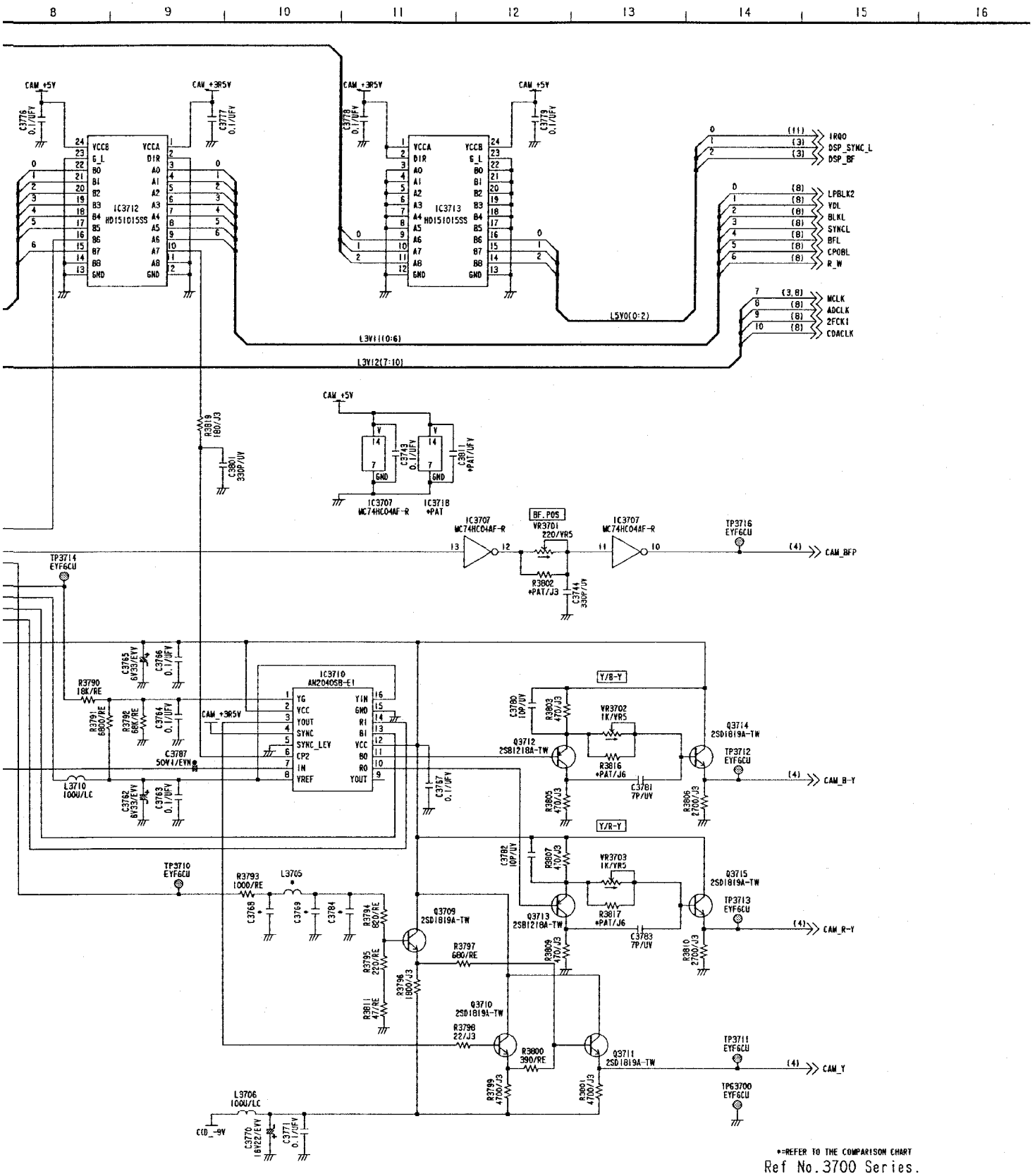

*=REFER TO THE COMPARISON CHART
Ref No.3700 Series.

PROCESS SCHEMATIC DIAGRAM 10／12（E15:Page CBA-10）

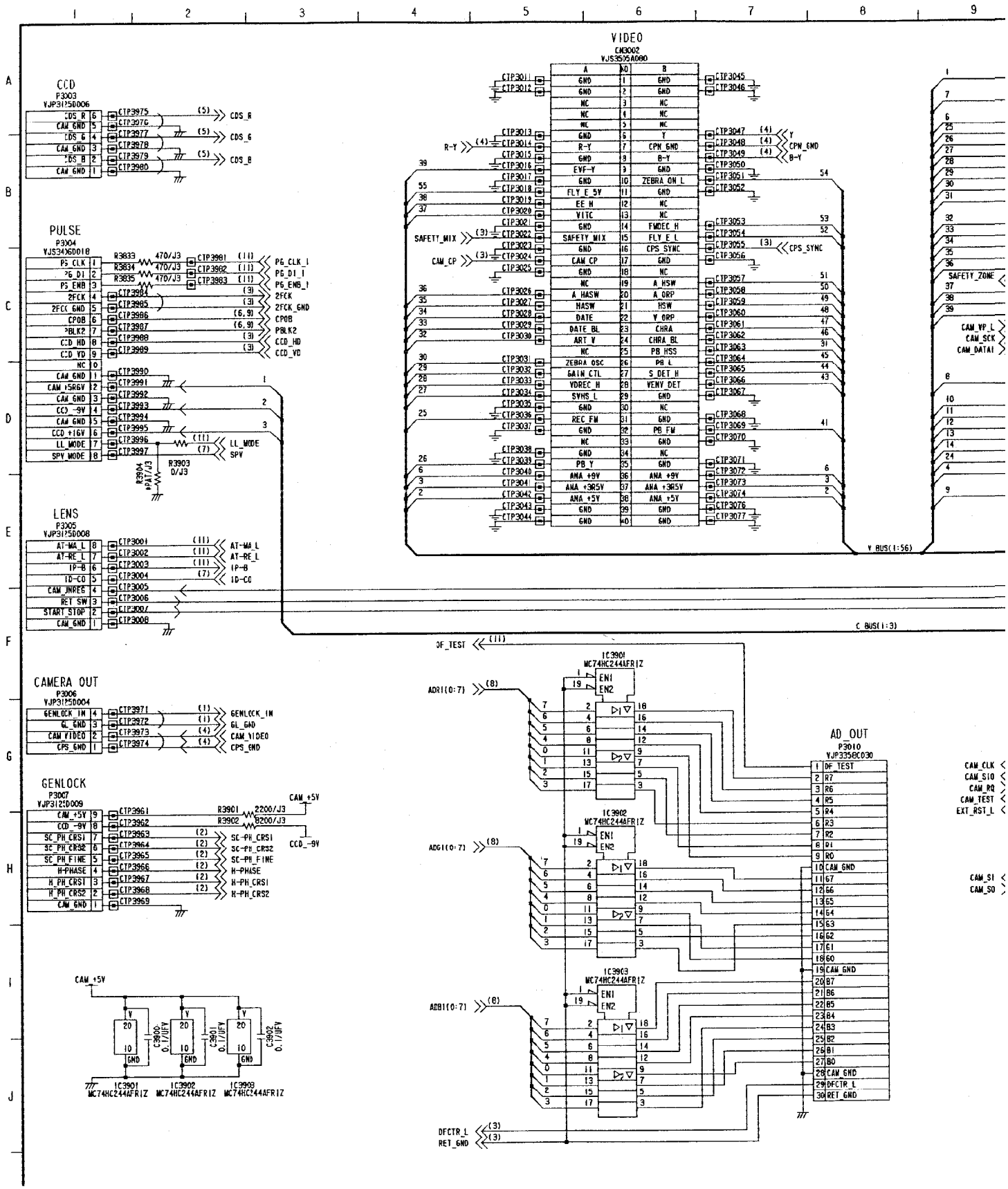

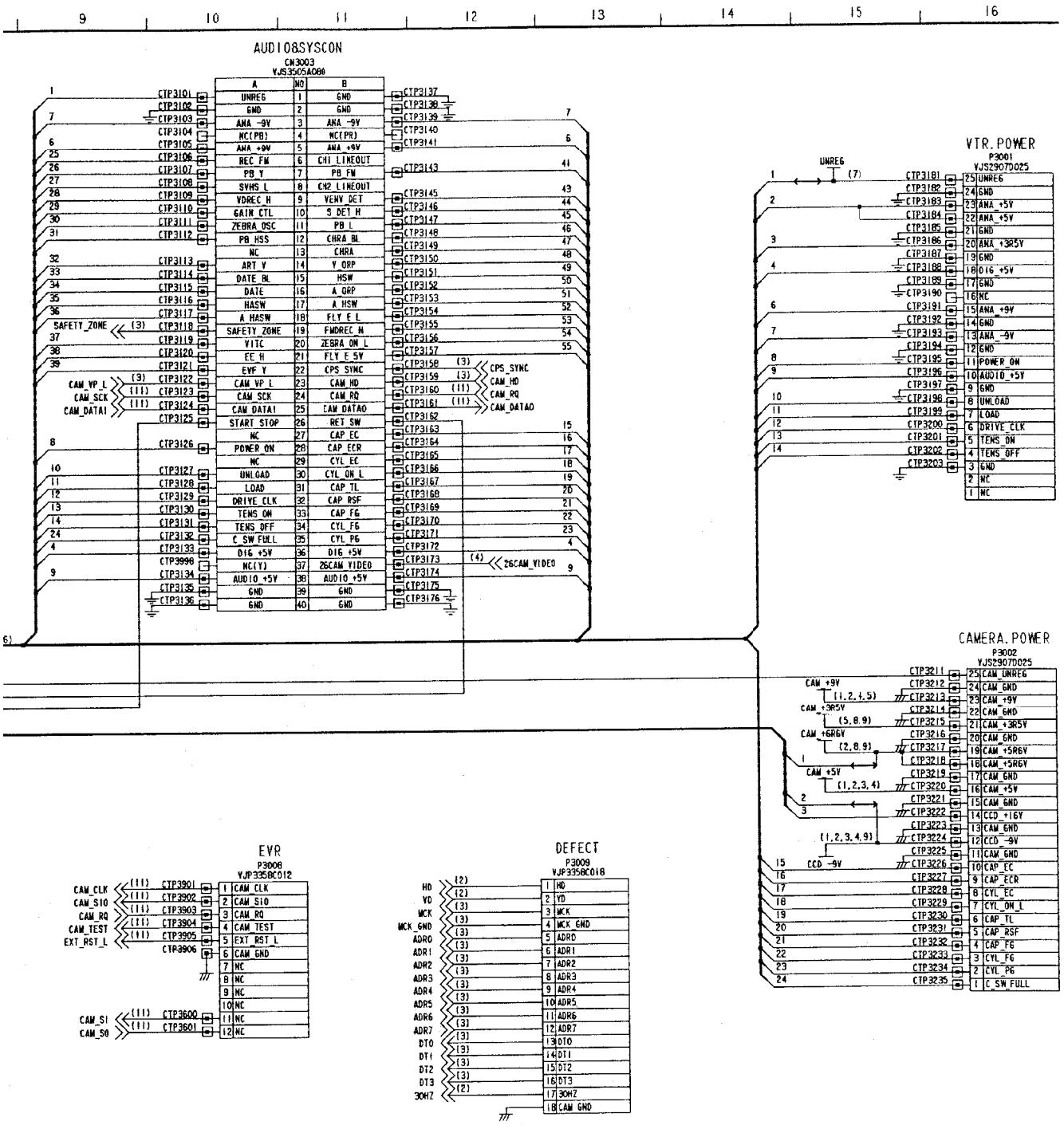

*=REFER TO THE COMPARISON CHART

Ref No. 3000 Series.

PROCESS SCHEMATIC DIAGRAM 11／12（E15:Page CBA-10）

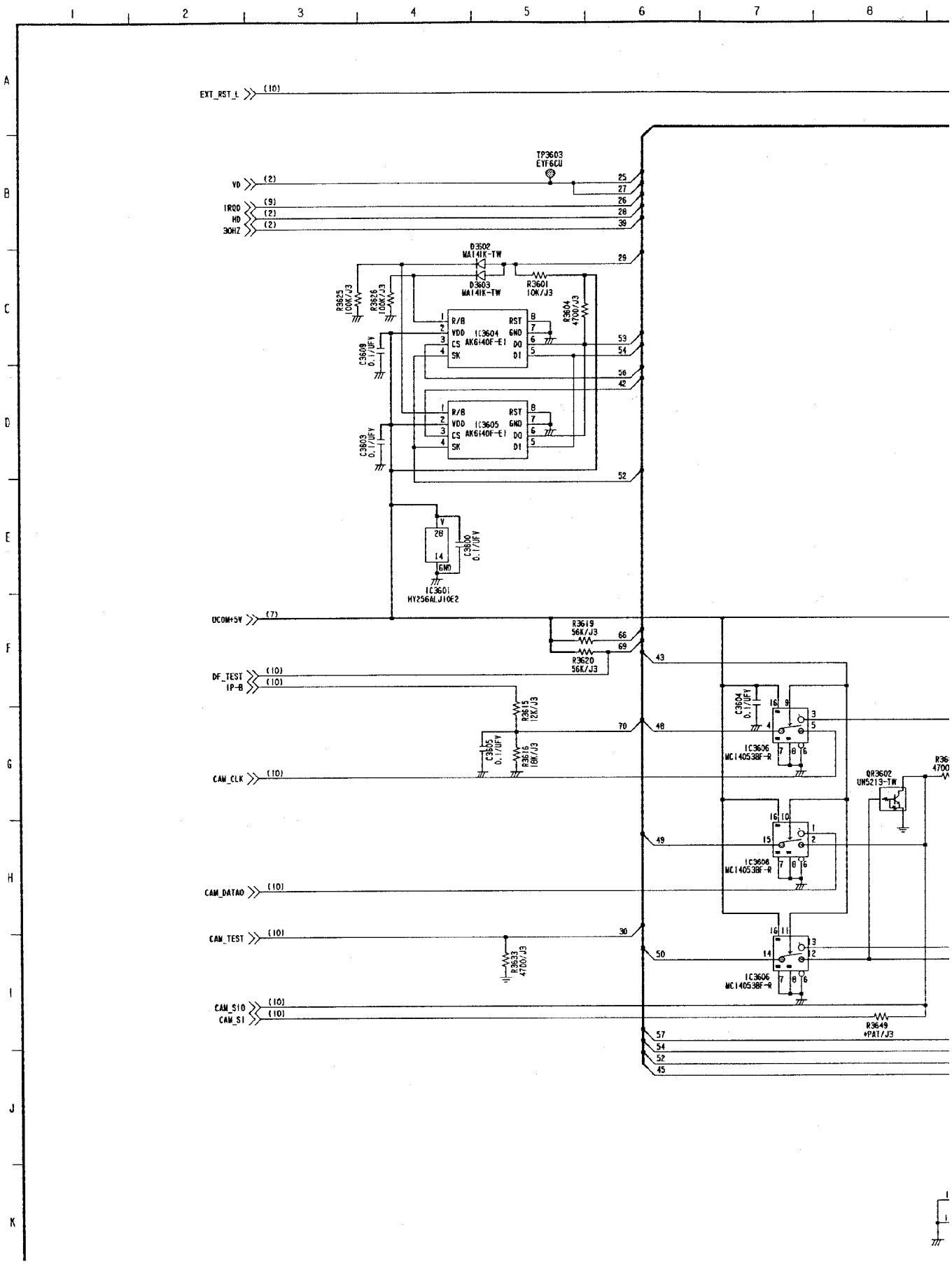

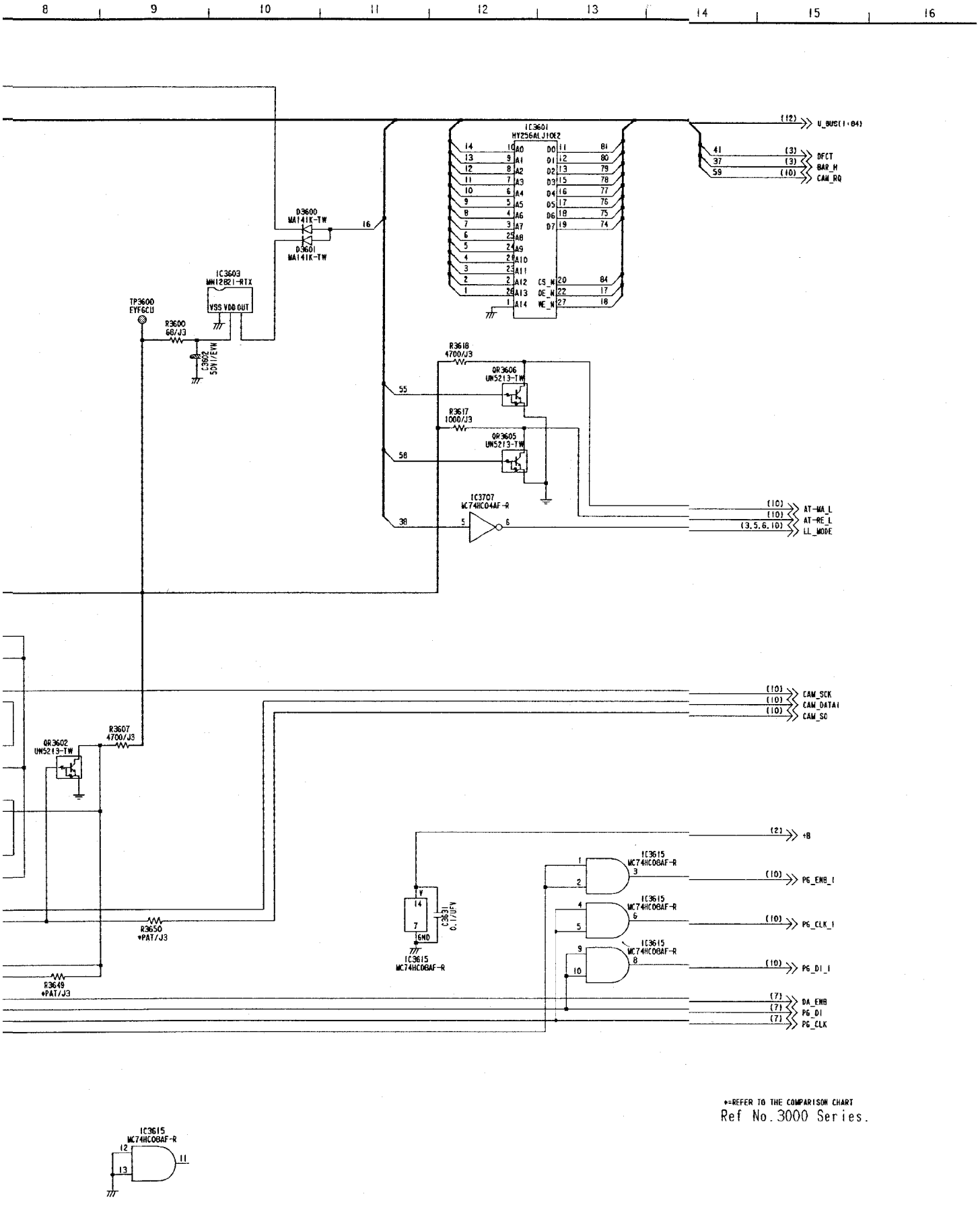

*=REFER TO THE COMPARISON CHART
Ref No.3000 Series.

PROCESS SCHEMATIC DIAGRAM 12／12 (E15:Page CBA-10)

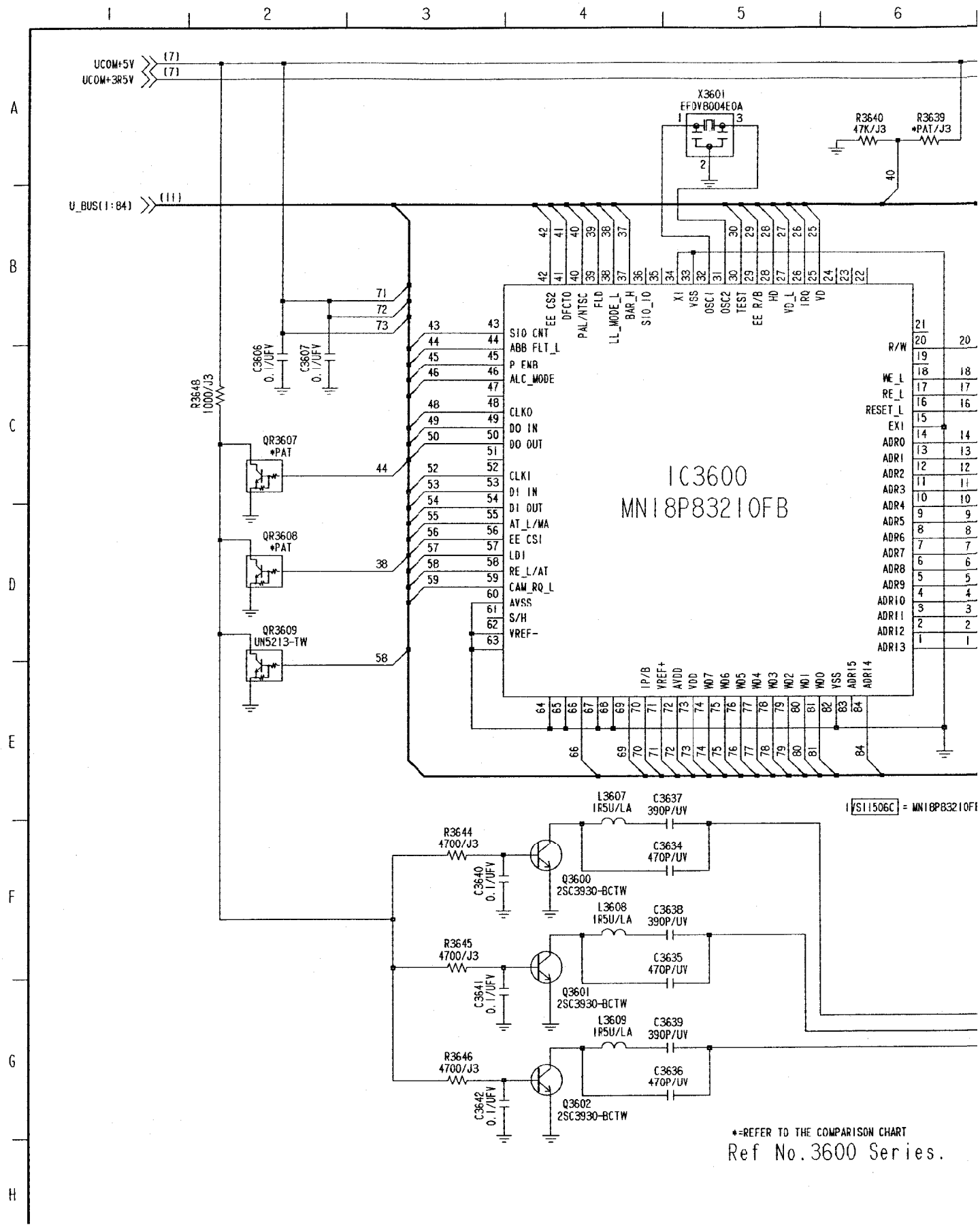

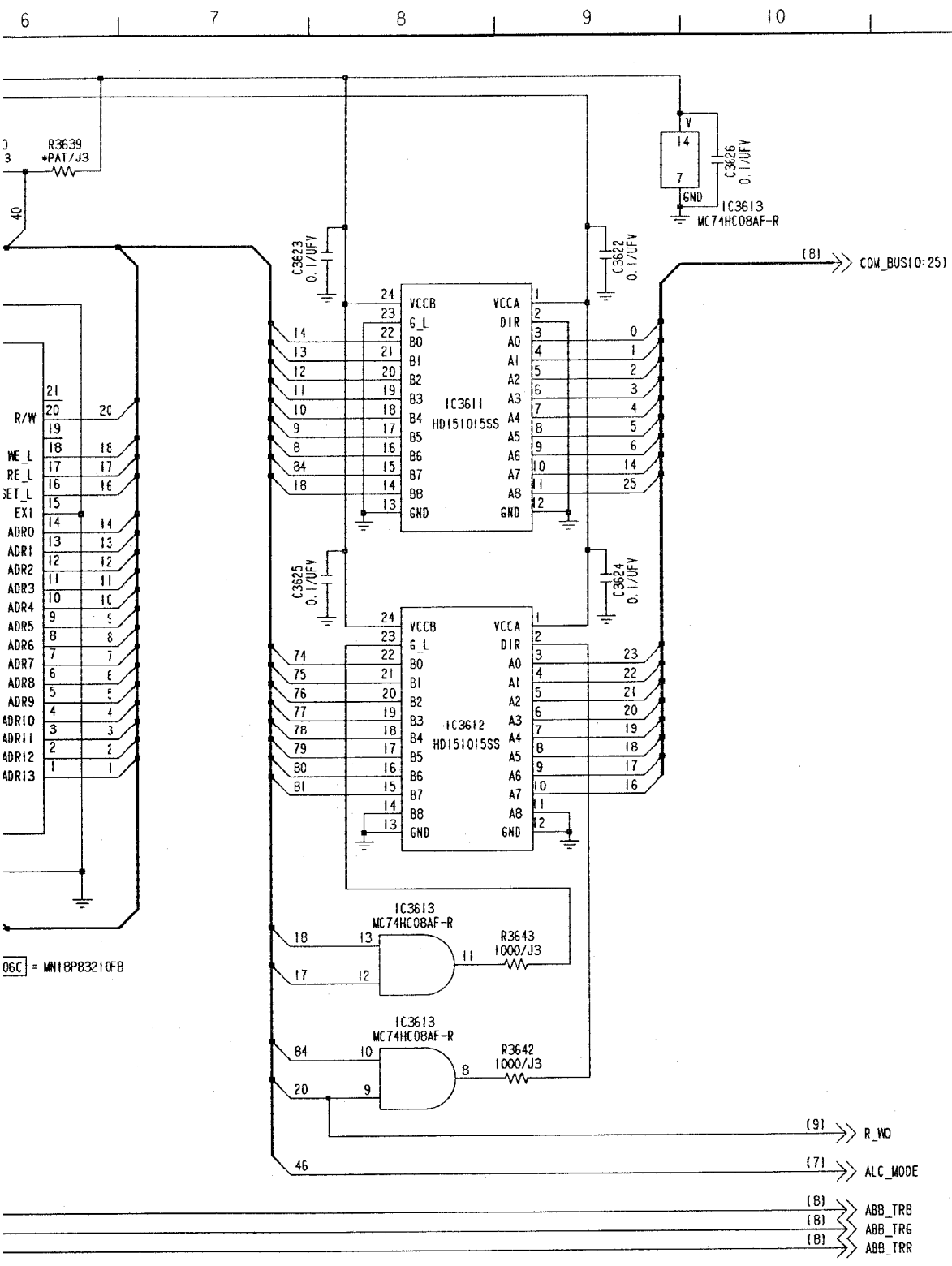
6
7
8
9
10
11
R3639
*PAT/J3
C3623
0.1/UFV
C3622
0.1/UFV
C3626
0.1/UFV
IC3613
MC74HC08AF-R
GND
(8) COM_BUS[0:25]
IC3611
HD151015SS
VCCB
VCCA
G_L
DIR
B0
B1
B2
B3
B4
B5
B6
B7
B8
A0
A1
A2
A3
A4
A5
A6
A7
A8
C3625
0.1/UFV
C3624
0.1/UFV
IC3612
HD151015SS
IC3613
MC74HC08AF-R
R3643
1000/J3
IC3613
MC74HC08AF-R
R3642
1000/J3
(9) R_WD
(7) ALC_MODE
(8) ABB_TRB
(8) ABB_TRG
(8) ABB_TRR
R/W
ADR0
ADR1
ADR2
ADR3
ADR4
ADR5
ADR6
ADR7
ADR8
ADR9
ADR10
ADR11
ADR12
ADR13
06C = MN18P83210FB

CHART
eries.

PROCESS COMPARISON CHART

REF	NTSC	PAL
C3021	15P/UV	*PAT/UV
C3022	15P/UV	*PAT/UV
C3037	*PAT/UV	*PAT/UV
C3064	39P/UV	15P/UV
C3065	39P/UV	15P/UV
C3069	*PAT/UV	*PAT/UV
C3081	*PAT/UV	*PAT/UV
C3082	*PAT/UV	*PAT/UV
C3092	*PAT/UV	*PAT/UV
C3094	*PAT/UV	*PAT/UV
C3103	*PAT/UFV	0.1/UFV
C3104	*PAT/UFV	0.1/UFV
C3105	*PAT/UFV	0.1/UFV
C3115	*PAT/UFV	*PAT/UFV
C3118	*PAT/UFV	0.1/UFV
C3119	*PAT/EVV	6V33/EVV
C3120	*PAT/UFV	0.1/UFV
C3121	*PAT/UFV	*PAT/UFV
C3204	*PAT/UV	*PAT/UV
C3206	*PAT/UV	*PAT/UV
C3208	*PAT/UV	*PAT/UV
C3234	33P/UV	27P/UV
C3236	27P/UV	18P/UV
C3237	7P/UV	*PAT/UV
C3238	27P/UV	18P/UV
C3239	*PAT/UV	*PAT/UV
C3240	*PAT/UV	*PAT/UV
C3241	82P/UV	56P/UV
C3242	33P/UV	27P/UV
C3243	12P/UV	10P/UV
C3244	33P/UV	27P/UV
C3248	*PAT/UV	*PAT/UV
C3249	*PAT/UV	*PAT/UV
C3250	*PAT/UV	*PAT/UV
C3251	*PAT/UV	*PAT/UV
C3252	*PAT/UV	*PAT/UV
C3253	*PAT/UV	*PAT/UV
C3254	*PAT/UV	*PAT/UV
C3255	*PAT/UV	*PAT/UV
C3256	*PAT/UV	*PAT/UV
C3257	*PAT/UV	*PAT/UV
C3258	*PAT/UV	*PAT/UV
C3493	*PAT/UV	*PAT/UV
C3498	*PAT/UV	*PAT/UV
C3503	*PAT/UV	*PAT/UV
C3551	*PAT/ST	*PAT/ST

REF	NTSC	PAL
C3552	*PAT/UV	*PAT/UV
C3553	*PAT/UFV	*PAT/UFV
C3554	*PAT/UV	*PAT/UV
C3555	*PAT/UFV	*PAT/UFV
C3556	*PAT/UV	*PAT/UV
C3557	*PAT/UFV	*PAT/UFV
C3558	*PAT/ST	*PAT/ST
C3559	*PAT/EVV	*PAT/EVV
C3560	*PAT/EVV	*PAT/EVV
C3561	*PAT/EVV	*PAT/EVV
C3562	*PAT/UFV	*PAT/UFV
C3563	*PAT/UFV	*PAT/UFV
C3564	*PAT/UFV	*PAT/UFV
C3565	*PAT/UV	*PAT/UV
C3566	*PAT/UV	*PAT/UV
C3567	*PAT/UV	*PAT/UV
C3568	*PAT/UV	*PAT/UV
C3569	*PAT/UV	*PAT/UV
C3570	*PAT/UV	*PAT/UV
C3571	*PAT/UV	*PAT/UV
C3745	*PAT/UV	*PAT/UV
C3746	*PAT/UV	*PAT/UV
C3747	*PAT/UV	*PAT/UV
C3748	220P/UV	*PAT/UV
C3749	*PAT/UV	*PAT/UV
C3752	*PAT/UV	*PAT/UV
C3768	18P/UV	33P/UV
C3769	120P/UV	270P/UV
C3784	12P/UV	*PAT/UV
C3788	*PAT/UV	*PAT/UV
C3811	*PAT/UFV	*PAT/UFV
C3812	*PAT/UV	*PAT/UV
C3903	*PAT/ST	*PAT/ST
D3006	*PAT	*PAT
IC3026	*PAT	MC74HC74AF-R
IC3027	*PAT	MC74HC00AF-R
IC3718	*PAT	*PAT
L3003	68U/LA	39U/LA
L3100	*PAT/LC	100U/LC
L3101	*PAT/LC	100U/LC
L3206	15U/LA	12U/LA
L3207	*PAT/LA	*PAT/LA
L3208	*PAT/LA	*PAT/LA
L3209	*PAT/LA	*PAT/LA
L3210	*PAT/LA	*PAT/LA
L3423	*PAT/LA	*PAT/LA

REF	NTSC	PAL
L3424	*PAT/LA	*PAT/LA
L3425	*PAT/LA	*PAT/LA
L3705	47U/LA	100U/LA
Q3101	*PAT	2SB1218A-TW
Q3102	*PAT	2SD1819A-TW
Q3434	*PAT	*PAT
Q3435	*PAT	*PAT
Q3436	*PAT	*PAT
Q3437	*PAT	*PAT
Q3438	*PAT	*PAT
Q3439	*PAT	*PAT
QR3607	*PAT	*PAT
QR3608	*PAT	*PAT
R3026	*PAT/J3	*PAT/J3
R3027	*PAT/J3	*PAT/J3
R3036	15K/J3	12K/J3
R3050	*PAT/J3	*PAT/J3
R3063	3300/J3	1800/J3
R3066	*PAT/J3	*PAT/J3
R3067	*PAT/J3	*PAT/J3
R3073	*PAT/J3	*PAT/J3
R3075	*PAT/J3	0/J3
R3076	0/J3	*PAT/J3
R3077	*PAT/J3	0/J3
R3078	*PAT/J3	0/J3
R3079	*PAT/J3	*PAT/J3
R3081	0/J3	*PAT/J3
R3082	*PAT/J3	0/J3
R3084	*PAT/J3	*PAT/J3
R3090	*PAT/J3	*PAT/J3
R3091	*PAT/J3	*PAT/J3
R3105	*PAT/J3	*PAT/J3
R3106	0/J3	*PAT/J3
R3107	*PAT/J3	*PAT/J3
R3108	*PAT/J3	*PAT/J3
R3114	47K/RE	82K/RE
R3116	*PAT/J3	*PAT/J3
R3118	270/J3	390/J3
R3119	*PAT/J3	*PAT/J3
R3120	*PAT/J3	*PAT/J3
R3121	*PAT/J3	*PAT/J3
R3123	0/J3	*PAT/J3
R3124	0/J3	*PAT/J3
R3129	*PAT/RE	1000/RE
R3130	*PAT/RE	68/RE
R3131	*PAT/RE	3R9/J6

REF	NTSC	PAL
R3132	*PAT/J3	3300/J3
R3133	*PAT/J3	3300/J3
R3137	*PAT/J3	*PAT/J3
R3138	*PAT/J3	*PAT/J3
R3139	*PAT/J3	0/J3
R3140	0/J3	*PAT/J3
R3141	*PAT/J3	0/J3
R3142	0/J3	*PAT/J3
R3143	0/J3	*PAT/J3
R3144	*PAT/J3	*PAT/J3
R3146	*PAT/J3	*PAT/J3
R3148	*PAT/J3	*PAT/J3
R3151	*PAT/J3	*PAT/J3
R3152	*PAT/J3	*PAT/J3
R3213	*PAT/J3	*PAT/J3
R3221	*PAT/J3	*PAT/J3
R3222	*PAT/J3	0/J3
R3223	0/J3	*PAT/J3
R3240	*PAT/J3	*PAT/J3
R3241	*PAT/J3	*PAT/J3
R3242	*PAT/J3	*PAT/J3
R3257	*PAT/J3	*PAT/J3
R3517	*PAT/J3	*PAT/J3
R3538	*PAT/J3	*PAT/J3
R3559	*PAT/J3	*PAT/J3
R3582	*PAT/J3	*PAT/J3
R3584	*PAT/J3	*PAT/J3
R3585	*PAT/J3	*PAT/J3
R3586	*PAT/J3	*PAT/J3
R3591	*PAT/J3	*PAT/J3
R3592	*PAT/J3	*PAT/J3
R3593	*PAT/J3	*PAT/J3
R3594	*PAT/J3	*PAT/J3
R3595	*PAT/J3	*PAT/J3
R3596	*PAT/J3	*PAT/J3
R3639	*PAT/J3	5600/J3
R3649	*PAT/J3	*PAT/J3
R3650	*PAT/J3	*PAT/J3
R3760	180/J3	0/J3
R3802	*PAT/J3	*PAT/J3
R3812	0/J3	*PAT/J3
R3816	*PAT/J6	*PAT/J6
R3817	*PAT/J6	*PAT/J6
R3823	8200/RE	6800/RE
R3824	3300/RE	2200/RE
R3825	100/RE	560/RE
R3831	*PAT/J3	*PAT/J3
R3904	*PAT/J3	*PAT/J3
VC3001	VCV0047-T	VCV0050-T
VR3003	*PAT/VR5	*PAT/VR5
VR3006	*PAT/VR5	*PAT/VR5
VR3007	*PAT/VR5	*PAT/VR5
VR3202	*PAT/VR5	5K/VR5
VR3411	*PAT/VR5	*PAT/VR5
VR3412	*PAT/VR5	*PAT/VR5
VR3413	*PAT/VR5	*PAT/VR5
X3002	VSX0338	VSX0270
X3003	VSX0081	VSX0114-B

CCD SCHEMATIC DIAGRAM 1／1

REF	NTSC	PAL
C107	*PAT/UV	*PAT/UV
C207	*PAT/UV	*PAT/UV
C307	*PAT/UV	*PAT/UV
IC101	MN3752AE-V	MN3762AE-V
IC201	MN3752AE-V	MN3762AE-V
IC203	*PAT	*PAT
IC301	MN3752AE-V	MN3762AE-V
R107	*PAT/J3	*PAT/J3
R207	*PAT/J3	*PAT/J3
R308	*PAT/J3	*PAT/J3

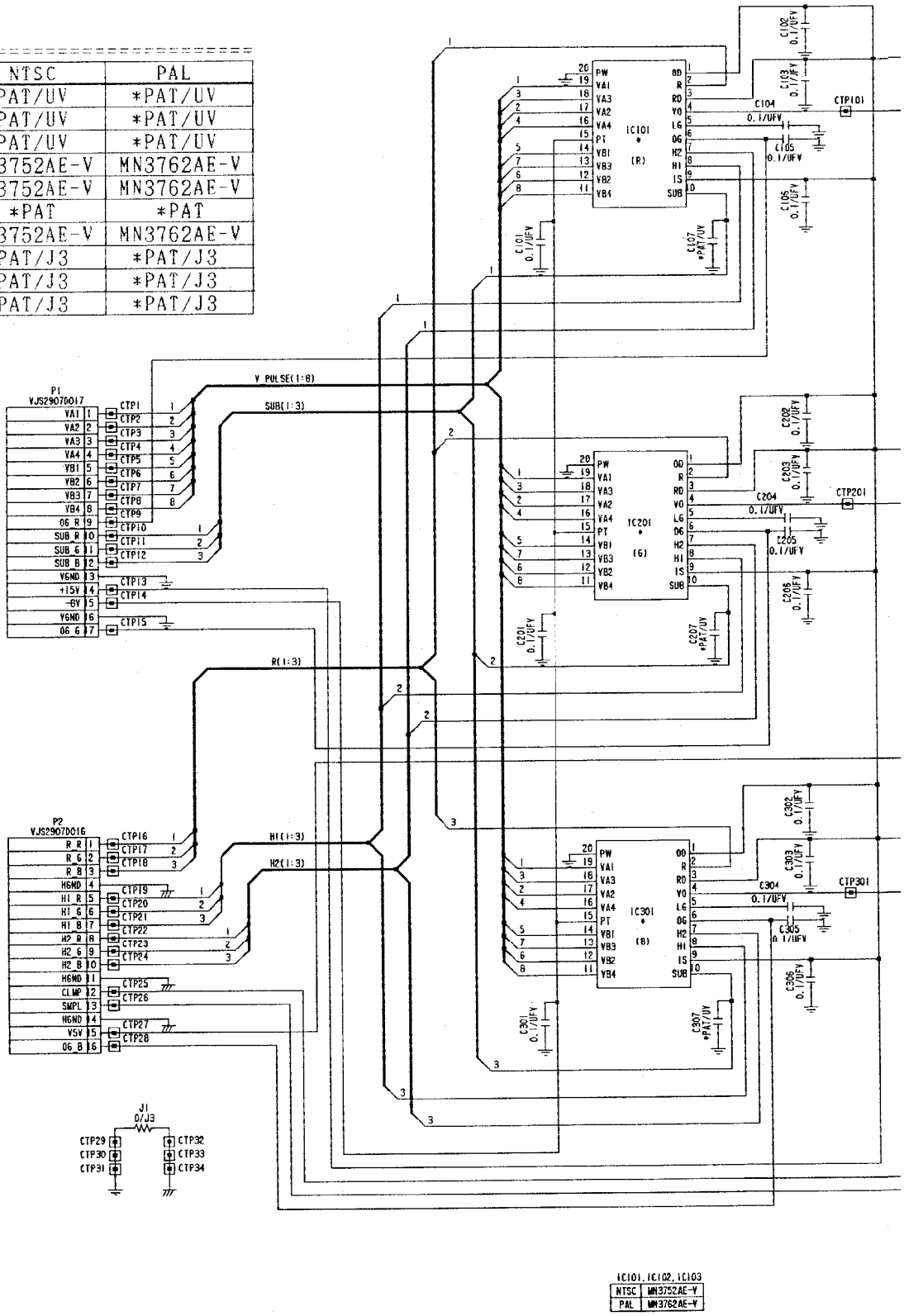

IC101, IC102, IC103

NTSC	MN3752AE-Y
PAL	MN3762AE-Y

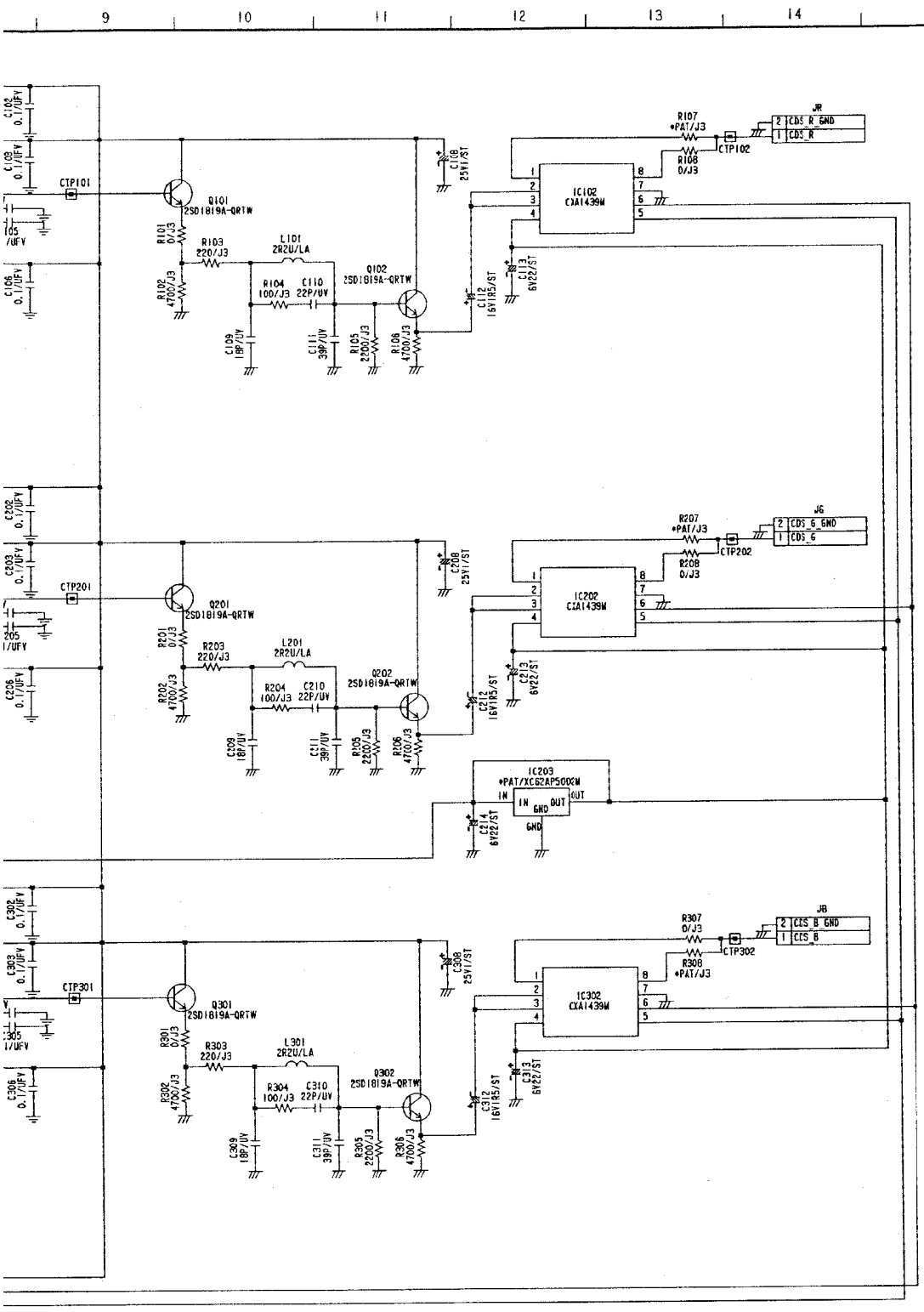
9
10
11
12
13
14
15
16
C102 0.1/UFV
C103 0.1/UFV
CTP101
C105 0.1/UFV
C106 0.1/UFV
Q101 2SD1819A-QRTW
R101 0/J3
R102 4700/J3
R103 220/J3
L101 2R2U/LA
R104 100/J3
C110 22P/UV
Q102 2SD1819A-QRTW
C109 18P/UV
C111 39P/UV
R105 2200/J3
R106 4700/J3
C108 25V1/ST
C112 16V185/ST
C113 6V22/ST
IC102 CXA1439M
R107 *PAT/J3
R108 0/J3
CTP102
JR
2 CDS_R_GND
1 CDS_R
C202 0.1/UFV
C203 0.1/UFV
CTP201
C205 0.1/UFV
C206 0.1/UFV
Q201 2SD1819A-QRTW
R201 0/J3
R202 4700/J3
R203 220/J3
L201 2R2U/LA
R204 100/J3
C210 22P/UV
Q202 2SD1819A-QRTW
C209 18P/UV
C211 39P/UV
R205 2200/J3
R206 4700/J3
C208 25V1/ST
C212 16V185/ST
C213 6V22/ST
IC202 CXA1439M
R207 *PAT/J3
R208 0/J3
CTP202
JG
2 CDS_G_GND
1 CDS_G
IC203 *PAT/XC62AP5002M
IN
GND
OUT
C214 6V22/ST
C302 0.1/UFV
C303 0.1/UFV
CTP301
C305 0.1/UFV
C306 0.1/UFV
Q301 2SD1819A-QRTW
R301 0/J3
R302 4700/J3
R303 220/J3
L301 2R2U/LA
R304 100/J3
C310 22P/UV
Q302 2SD1819A-QRTW
C309 18P/UV
C311 39P/UV
R305 2200/J3
R306 4700/J3
C308 25V1/ST
C312 16V185/ST
C313 6V22/ST
IC302 CXA1439M
R307 0/J3
R308 *PAT/J3
CTP302
JB
2 CDS_B_GND
1 CDS_B

CCD DRIVE SCHEMATIC DIAGRAM 1／1（E20:Page CBA-14）

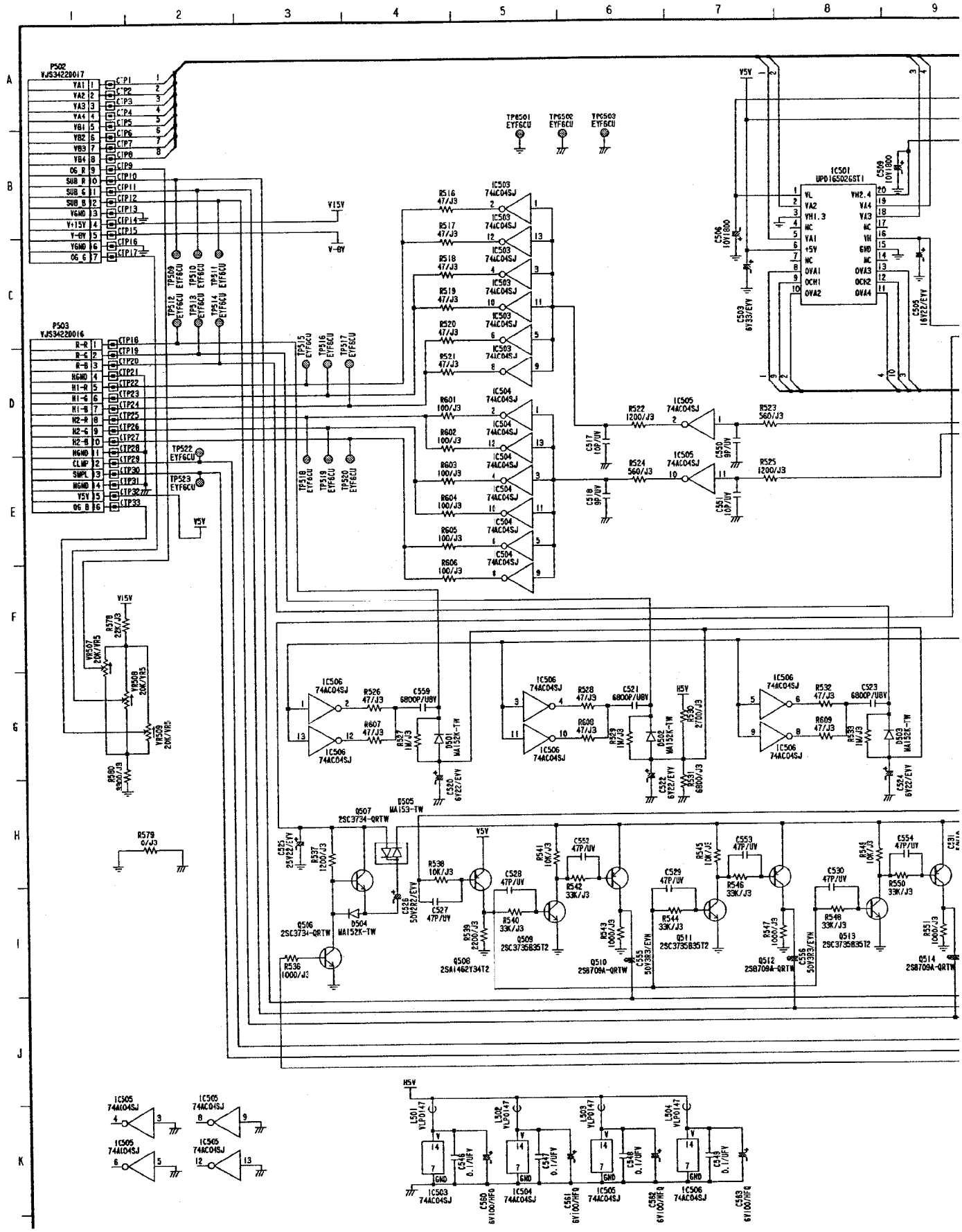

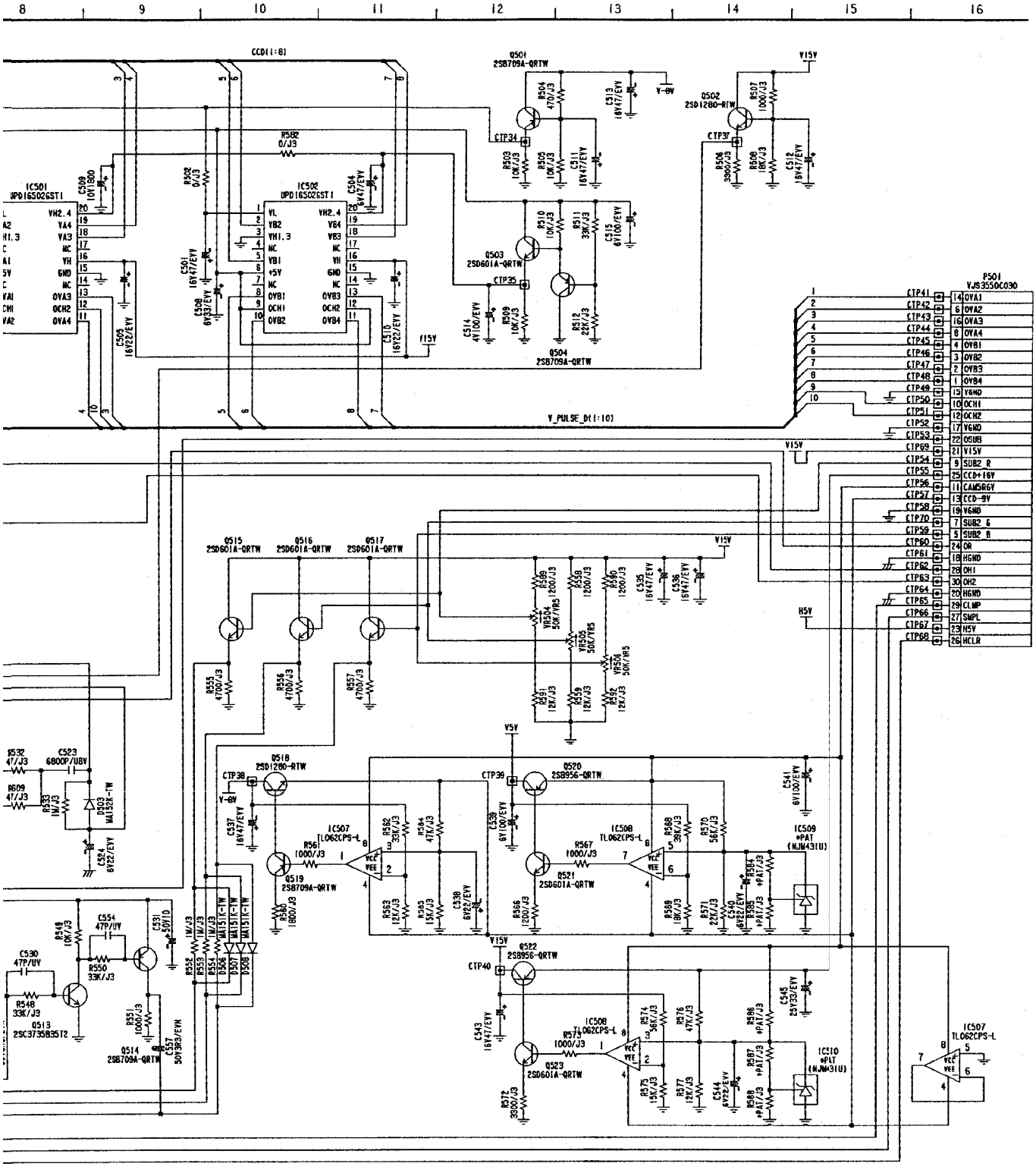

Ref No.500 Series.

CCD PULSE SCHEMATIC DIAGRAM 1／1 (E19:Page CBA-13)

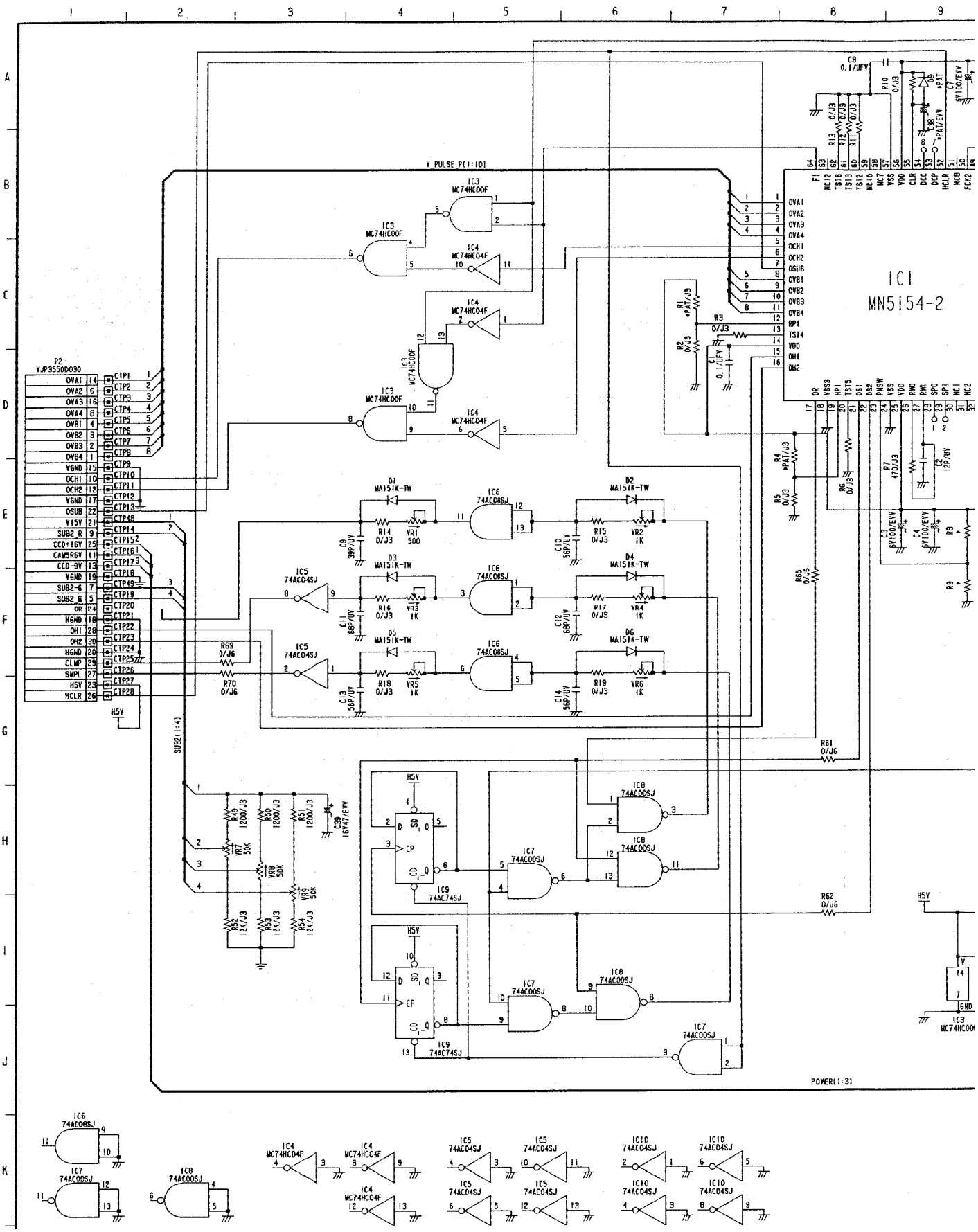

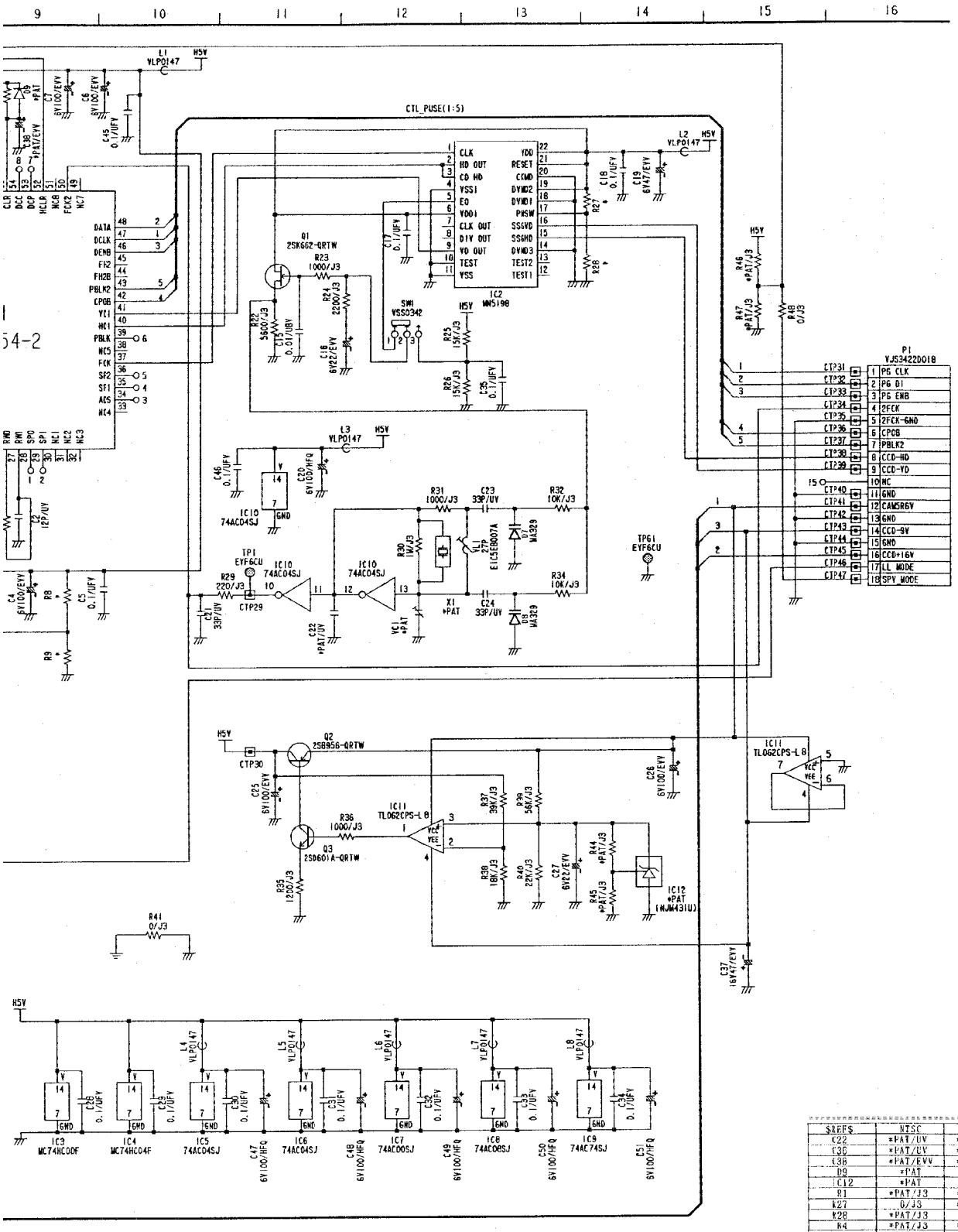

SYMBOLS	NTSC	PAL
C22	*PAT/UV	*PAT/UV
C36	*PAT/UV	*PAT/UV
C38	*PAT/EVV	*PAT/EVV
D9	*PAT	*PAT
IC12	*PAT	*PAT
R1	*PAT/J3	*PAT/J3
R27	0/J3	*PAT/J3
R28	*PAT/J3	0/J3
R4	*PAT/J3	*PAT/J3
R42	*PAT/J3	*PAT/J3
R44	*PAT/J3	*PAT/J3
R45	*PAT/J3	*PAT/J3
R46	*PAT/J3	*PAT/J3
R47	*PAT/J3	*PAT/J3
R8	*PAT/J3	0/J3
R9	0/J3	*PAT/J3
YC1	*PAT	*PAT
X1	*PAT	*PAT

H DEF SCHEMATIC DIAGRAM 1／1 (E1:Page CBA-11)

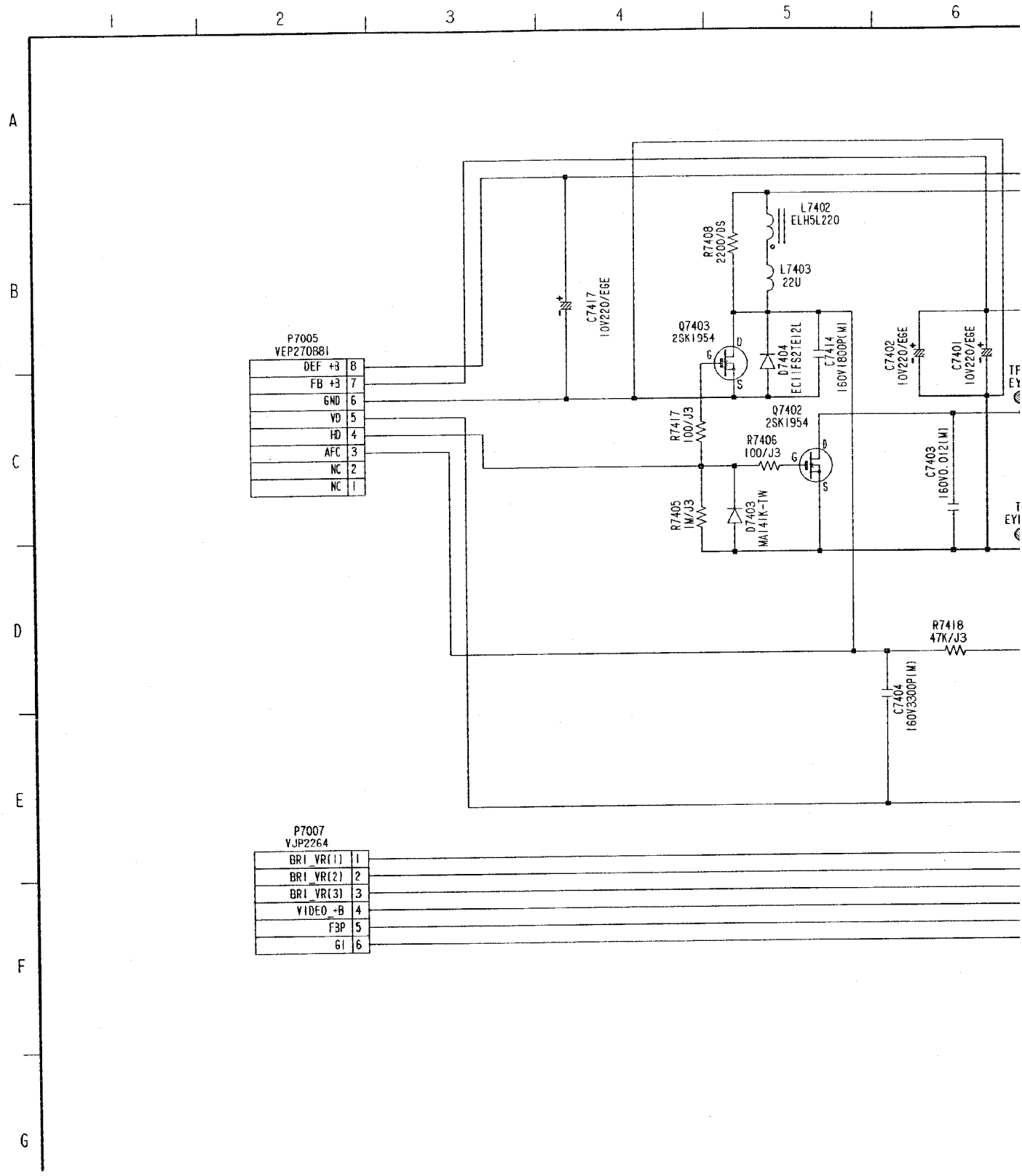

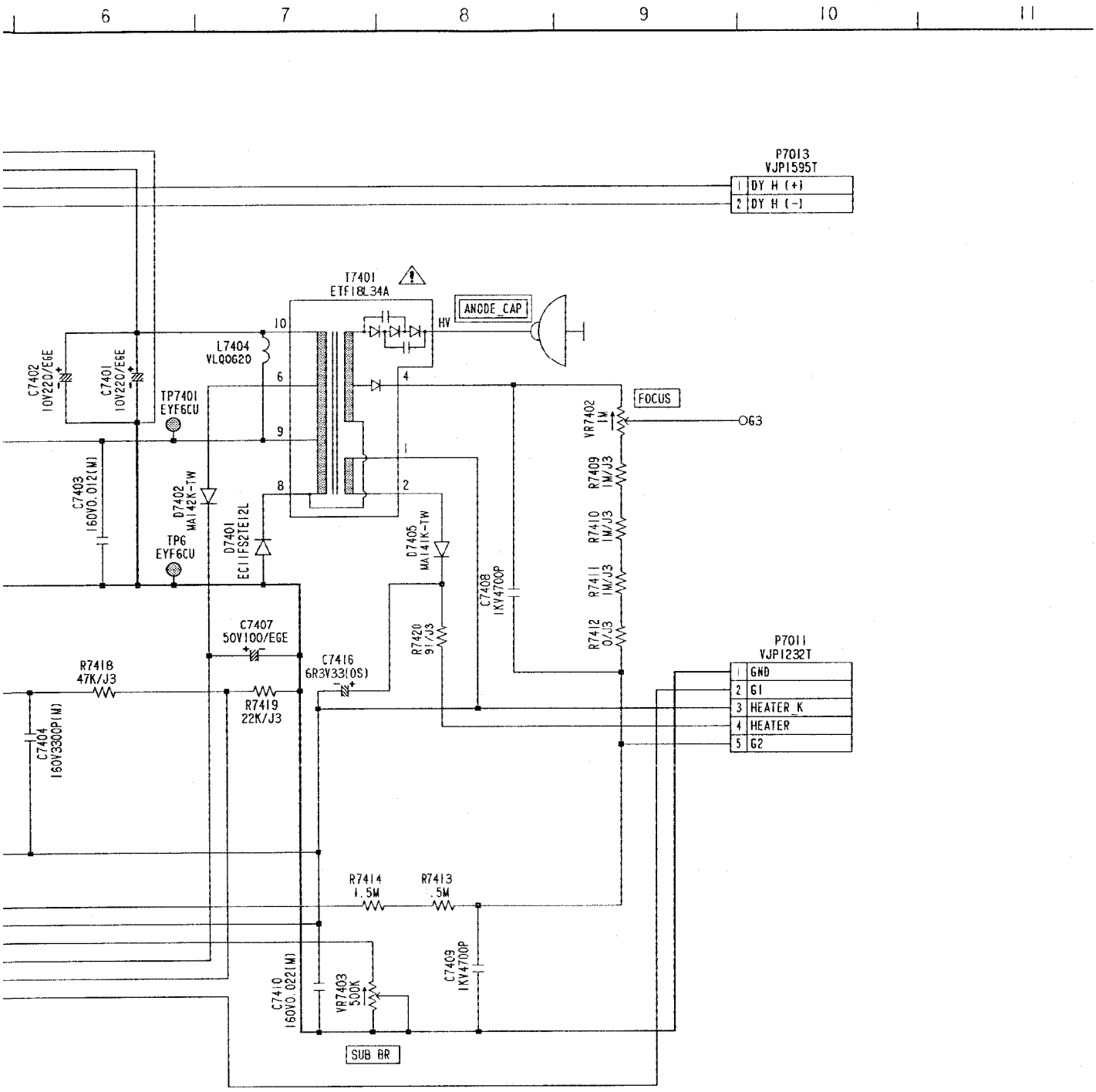

*=REFER TO THE COMPARISON CHART
Ref No.7400 Series.

V DEF SCHEMATIC DIAGRAM 1／1 (E2:Page CBA-11)

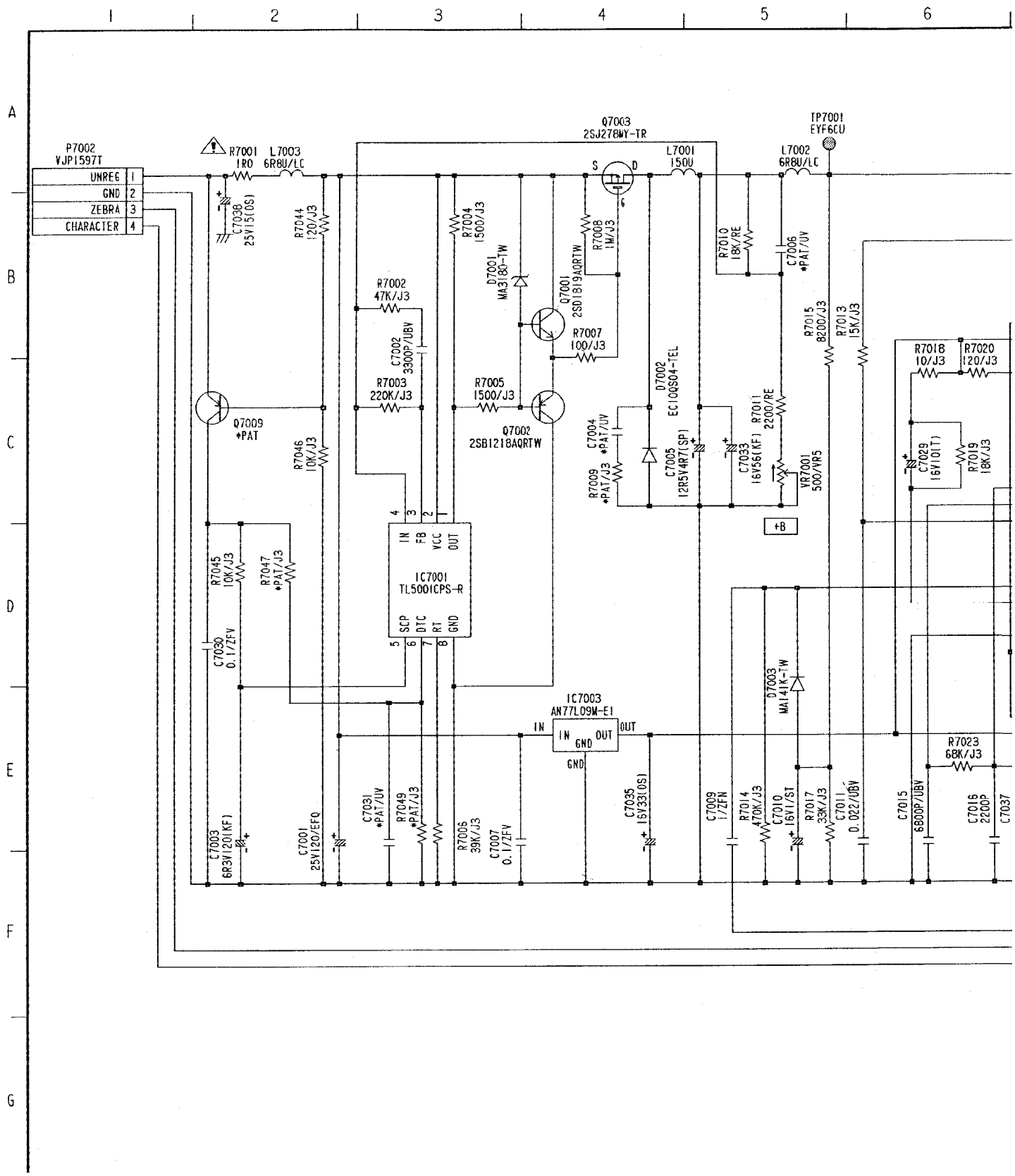

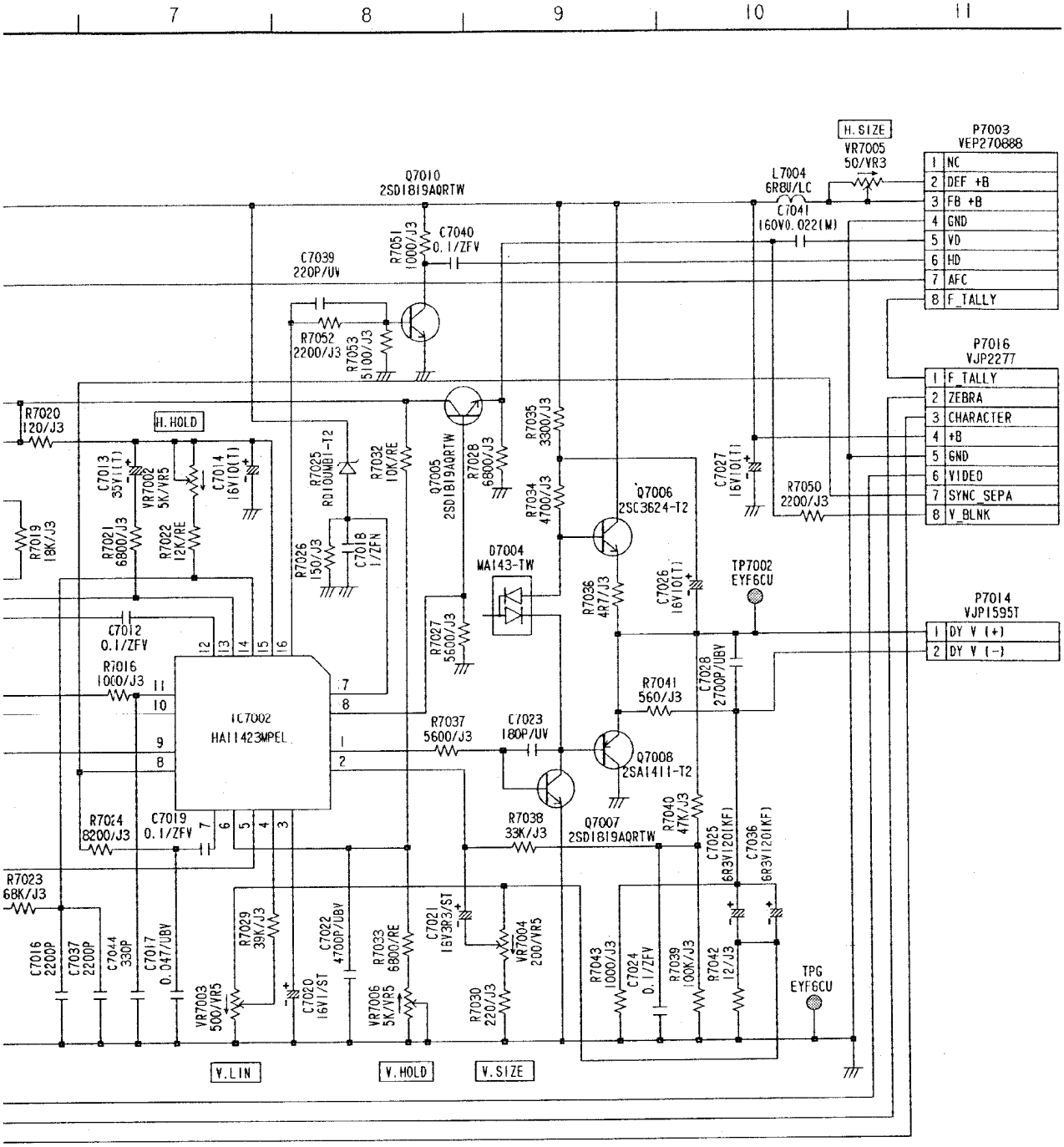

*=REFER TO THE COMPARISON CHART

Ref No.7000 Series.

CN SHEMATIC DIAGRAM 1／1（E3:Page CBA-12）

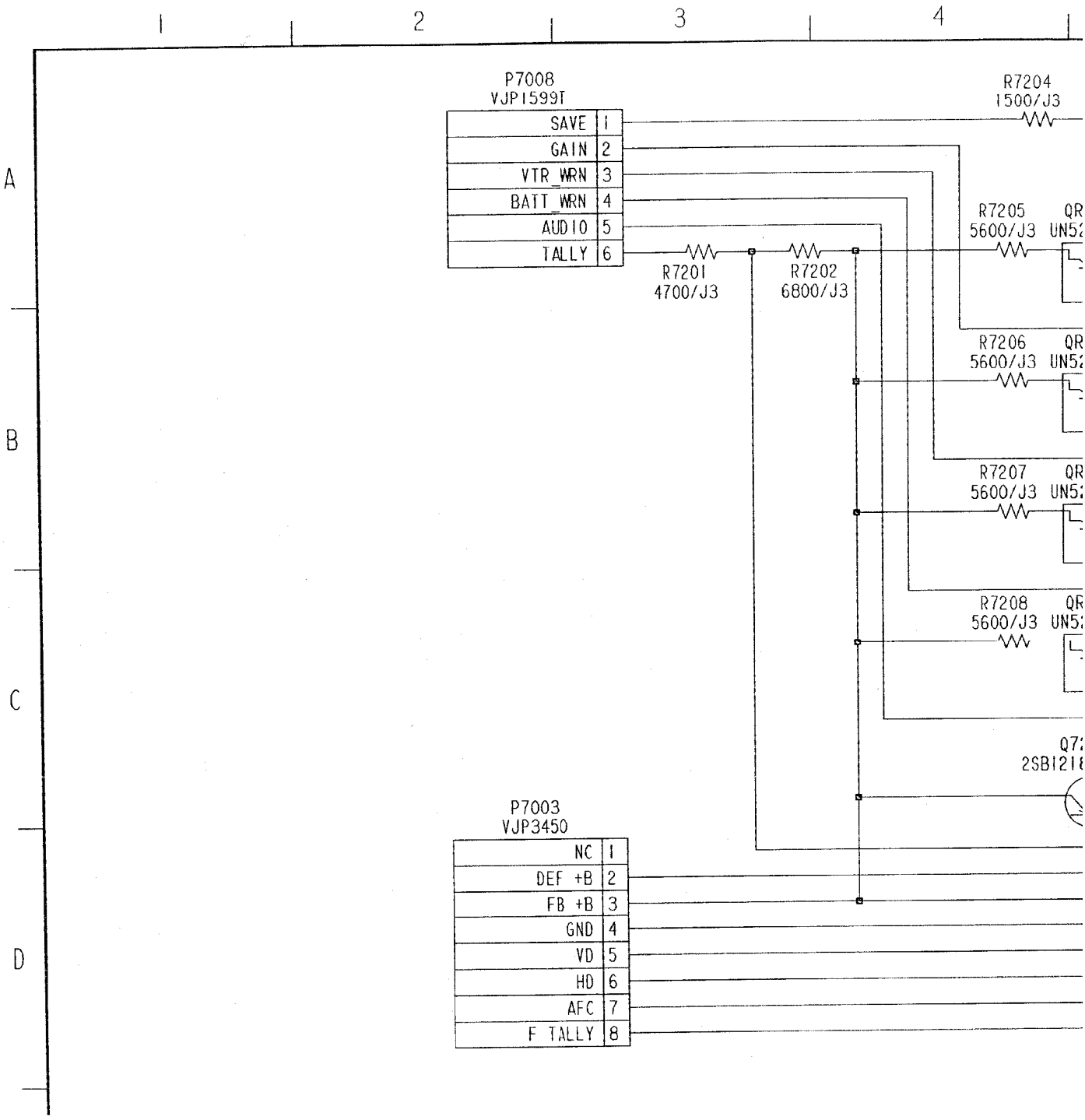

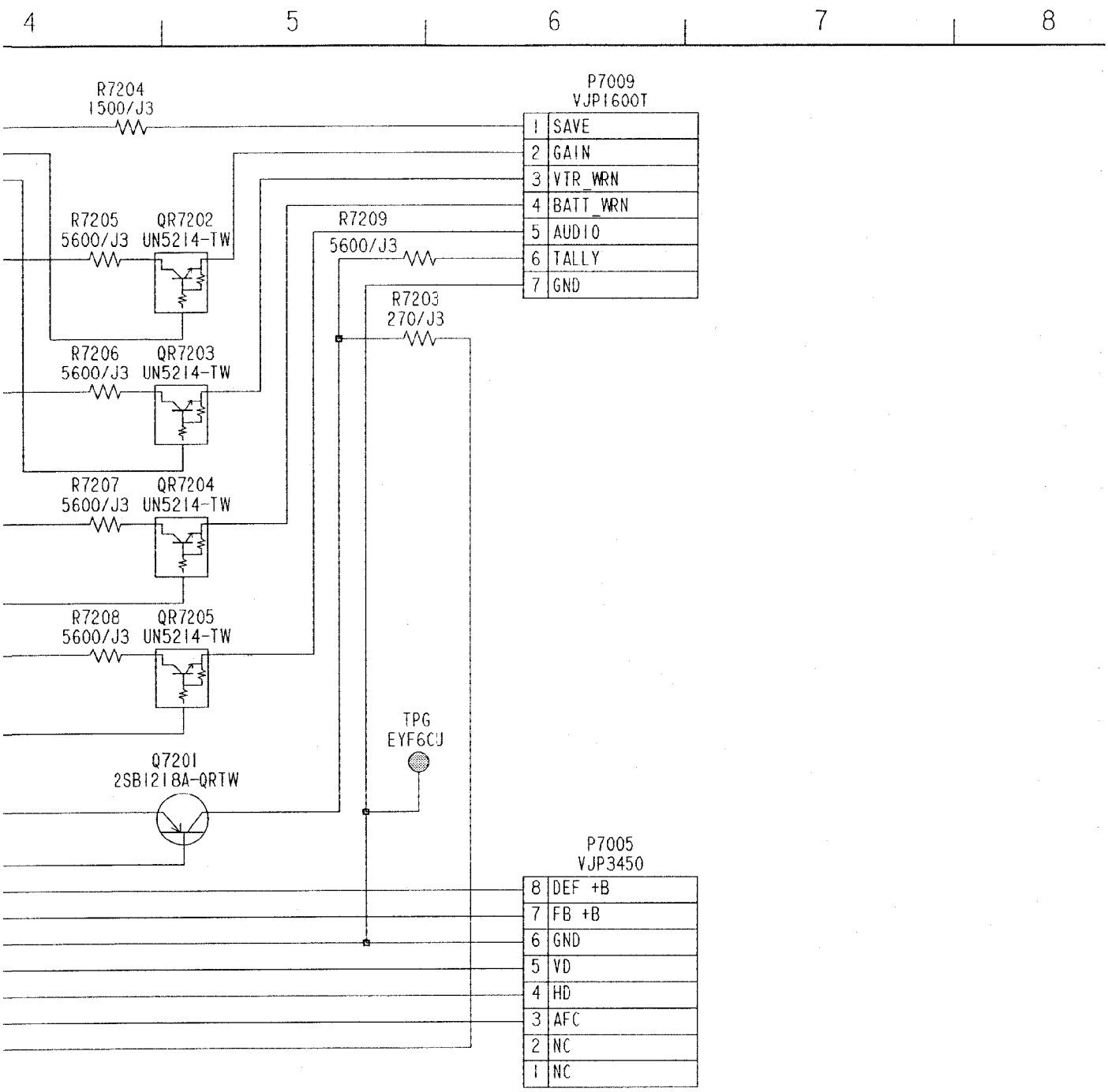

Ref No.7200 Series.

FRONT SCHEMATIC DIAGRAM 1／1 (E4:Page CBA-12)

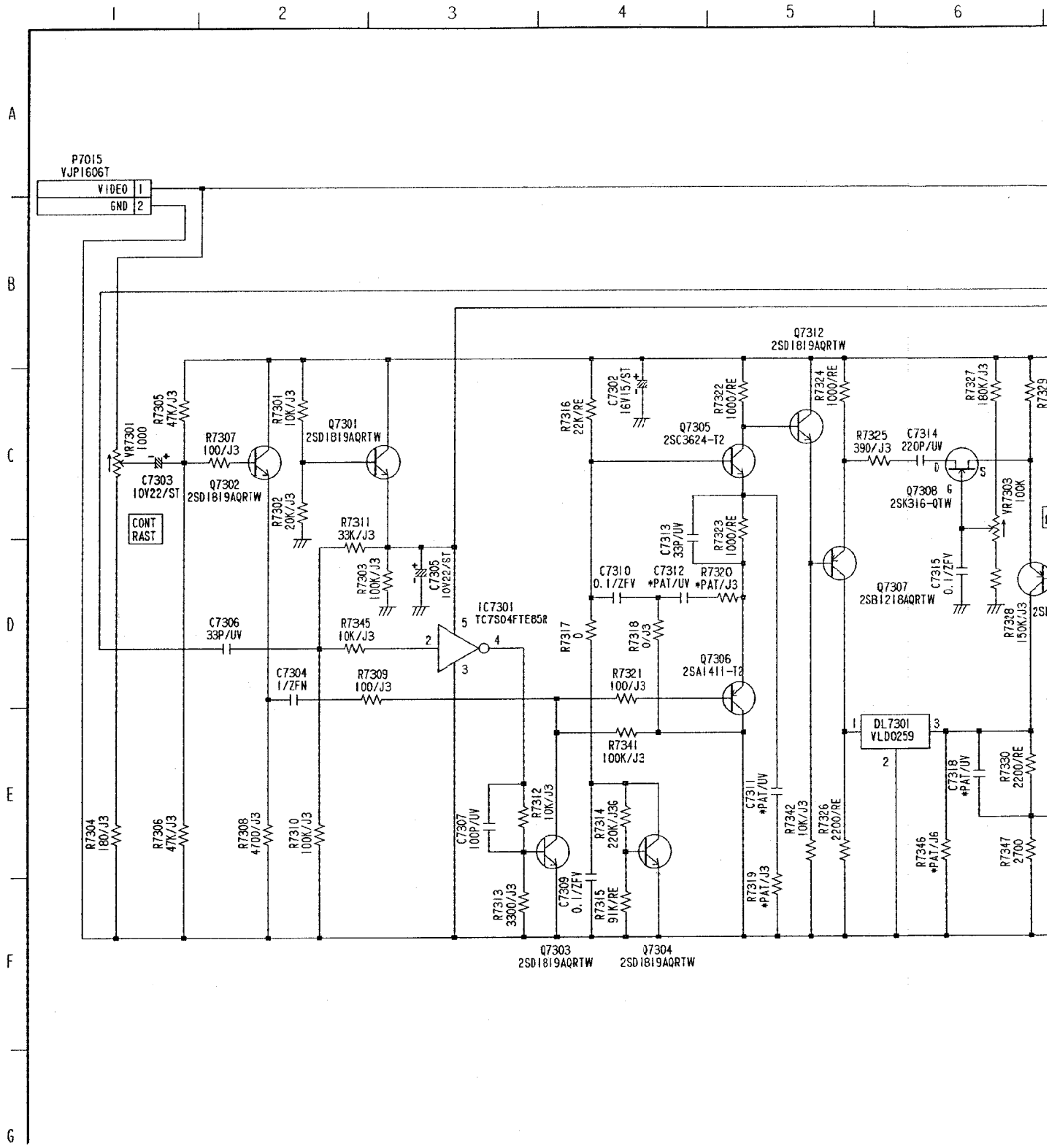

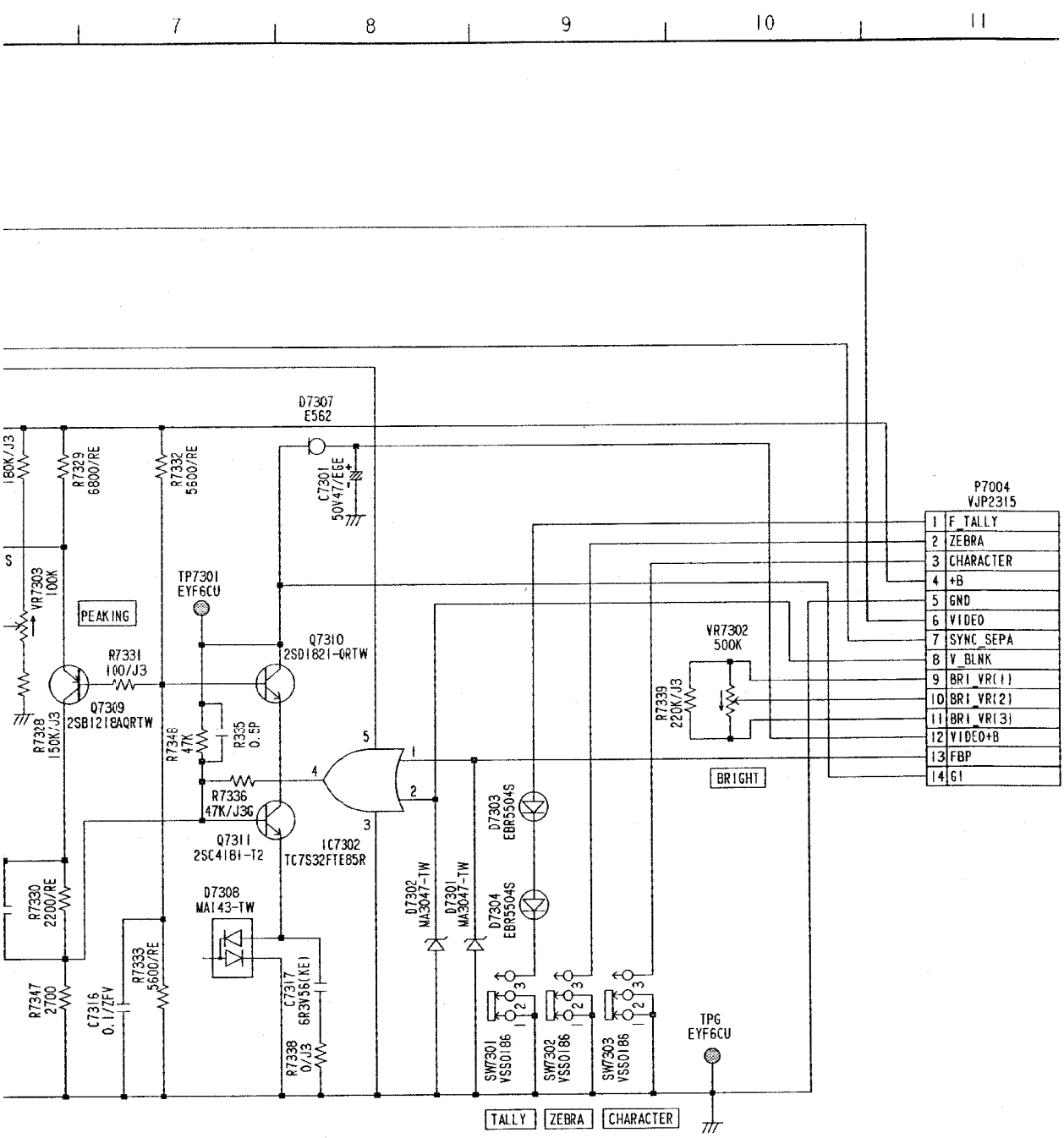

*=REFER TO THE COMPARISON CHART

Ref No. 7300 Series.

CRT MASK SCHEMATIC DIAGRAM 1／1 (E5:Page CBA-12)

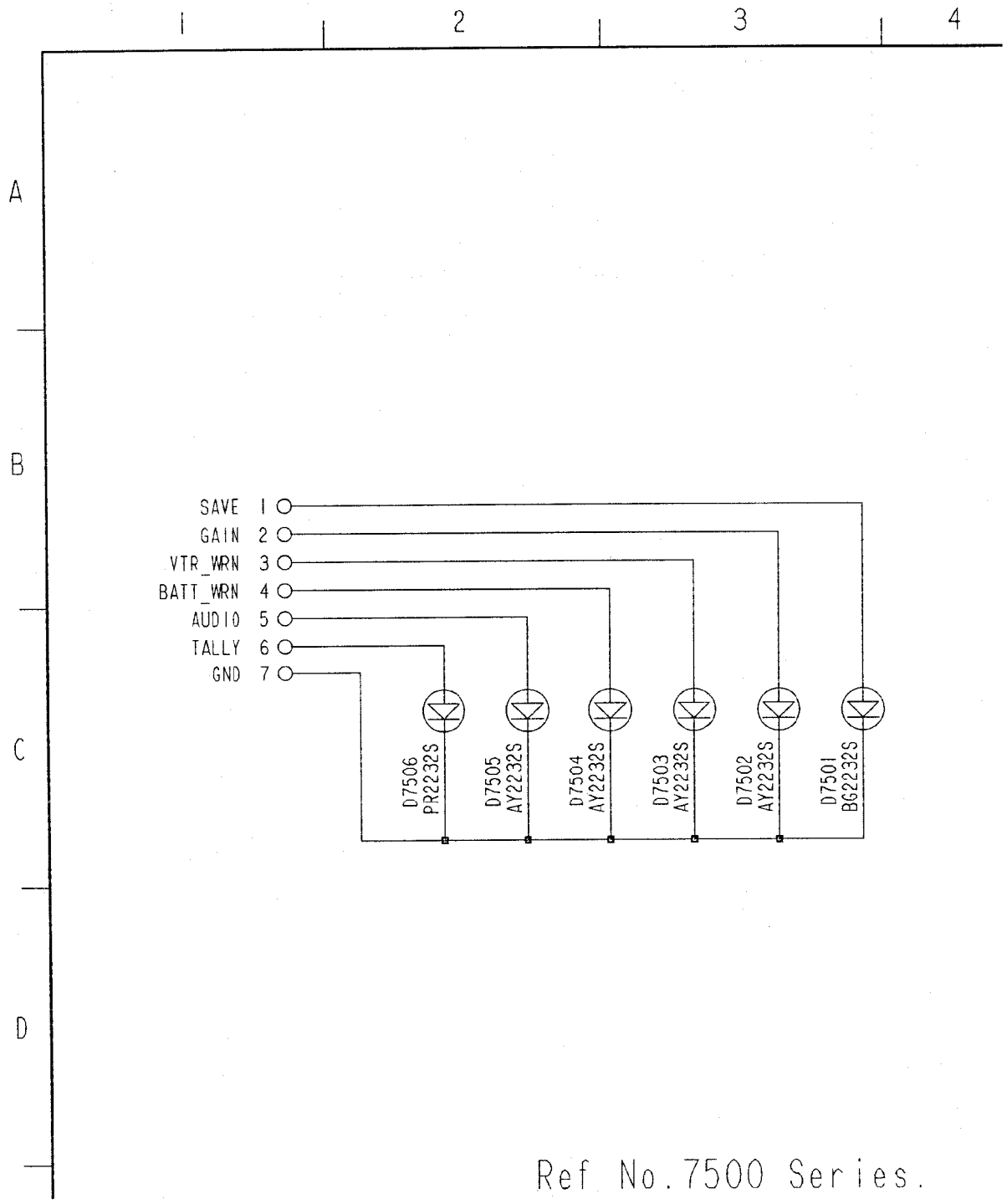

Ref No.7500 Series.

OPERATION SCHEMATIC DIAGRAM 1／1 (E24:Page CBA-13)

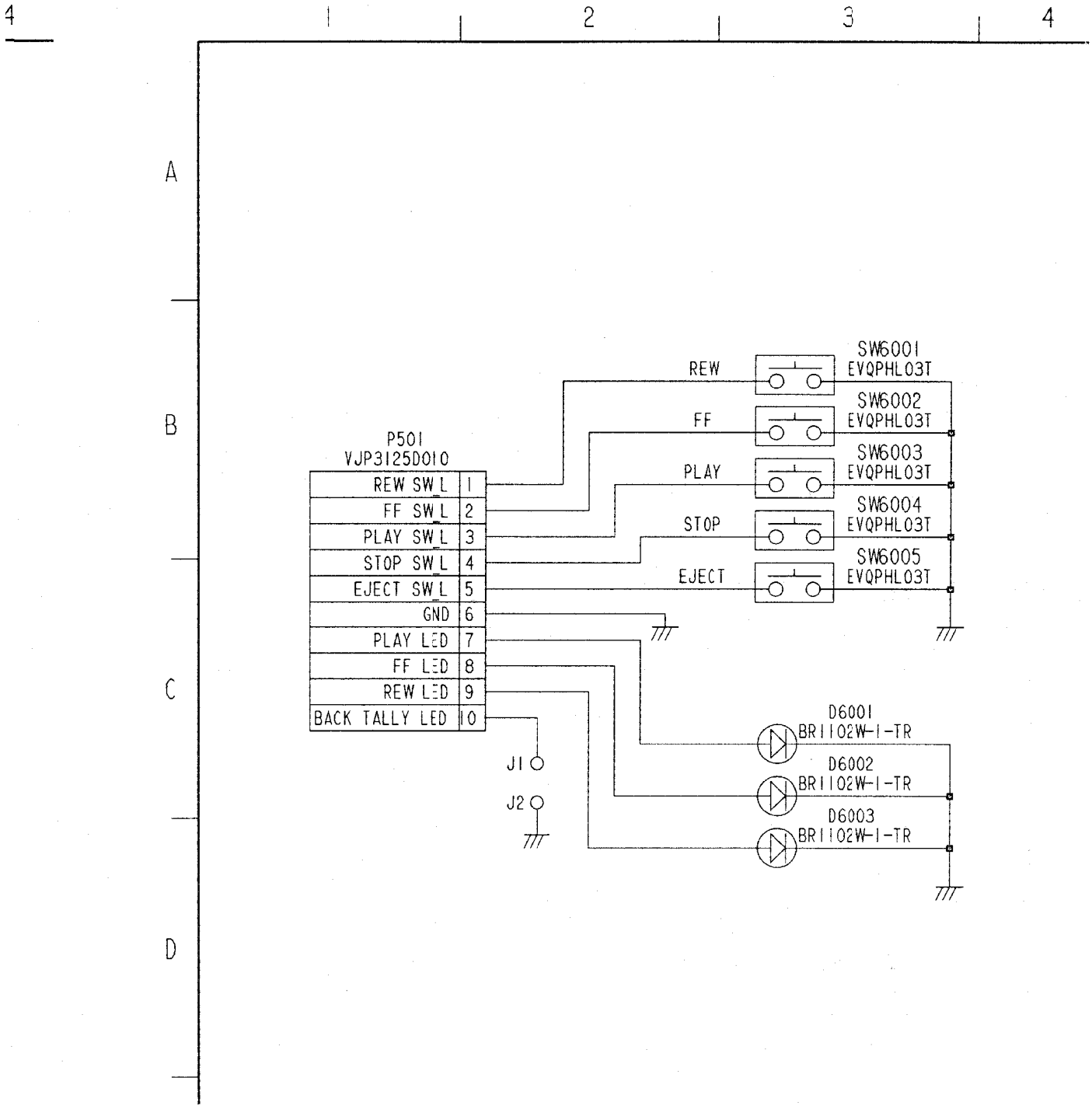

AV OUT SCHEMATIC DIAGRAM 1／1 (E8:Page CBA-12)

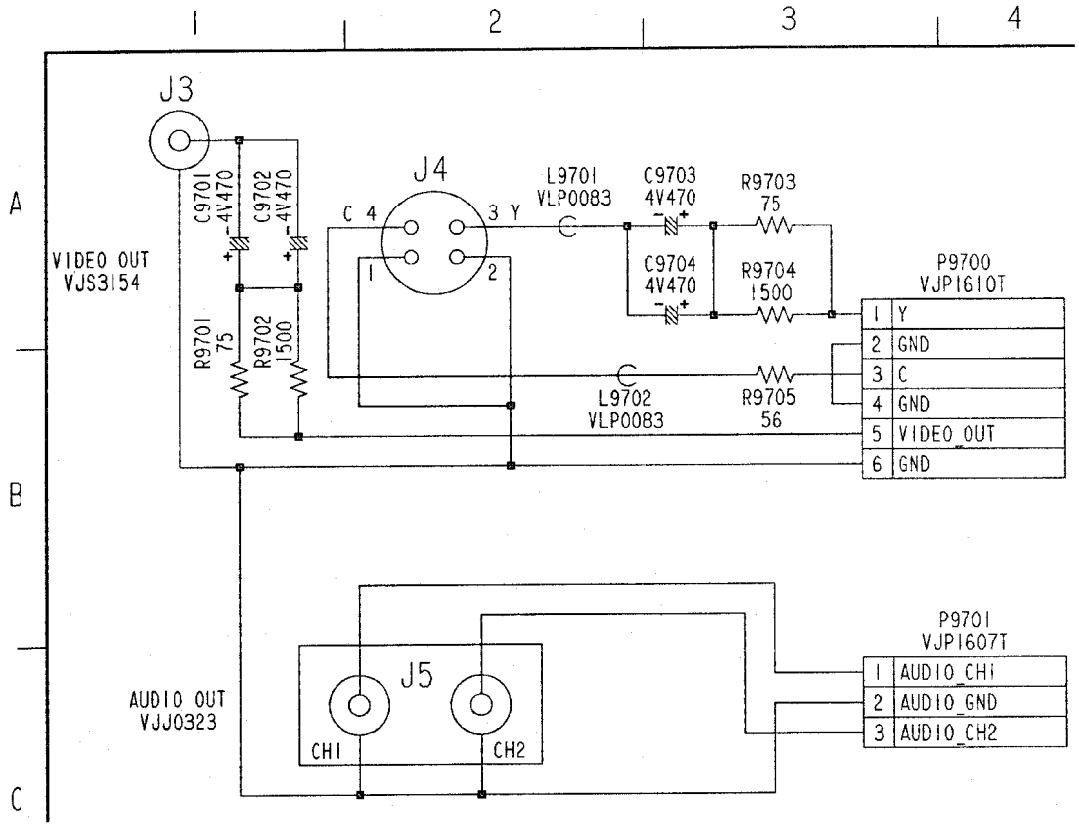

GEN LOCK SCHEMATIC DIAGRAM 1／1 (E31:Page CBA-12)

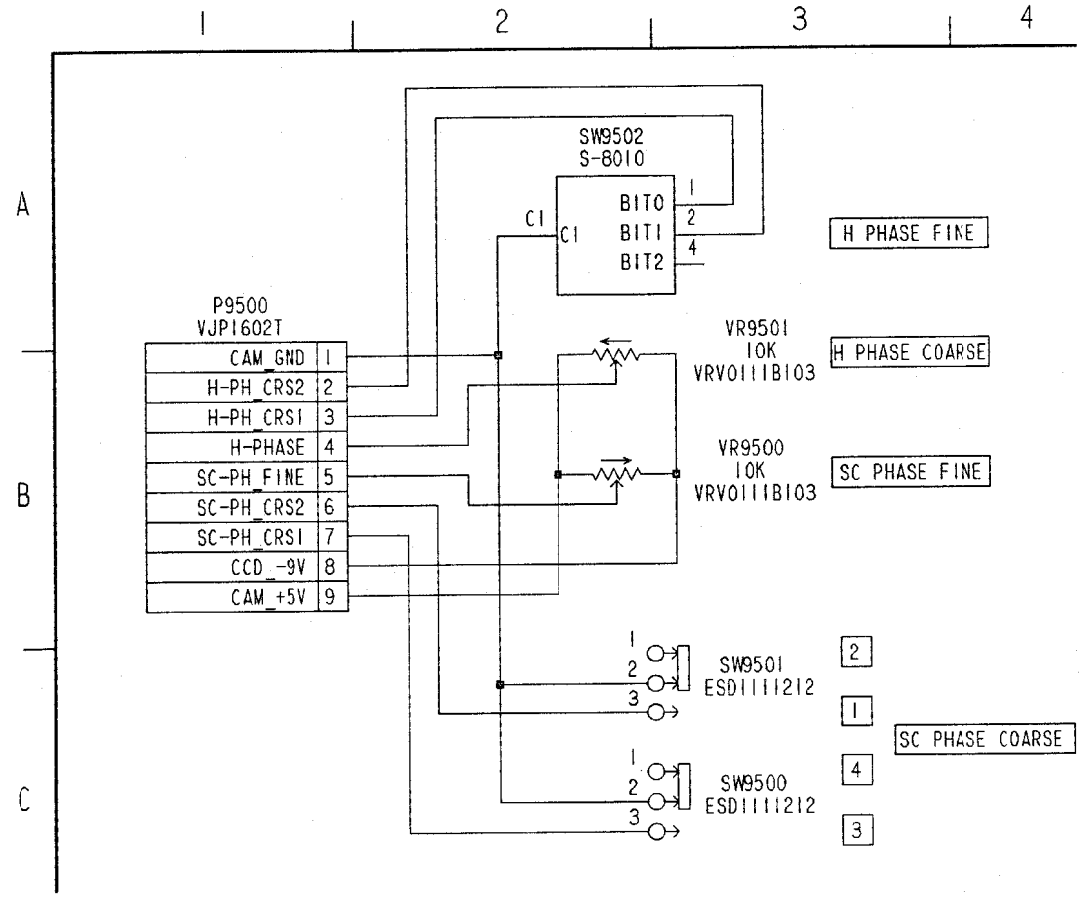

MACHANISM CONNECTION SCHEMATIC DIAGRAM 1／1 (E37:Page CBA-2)

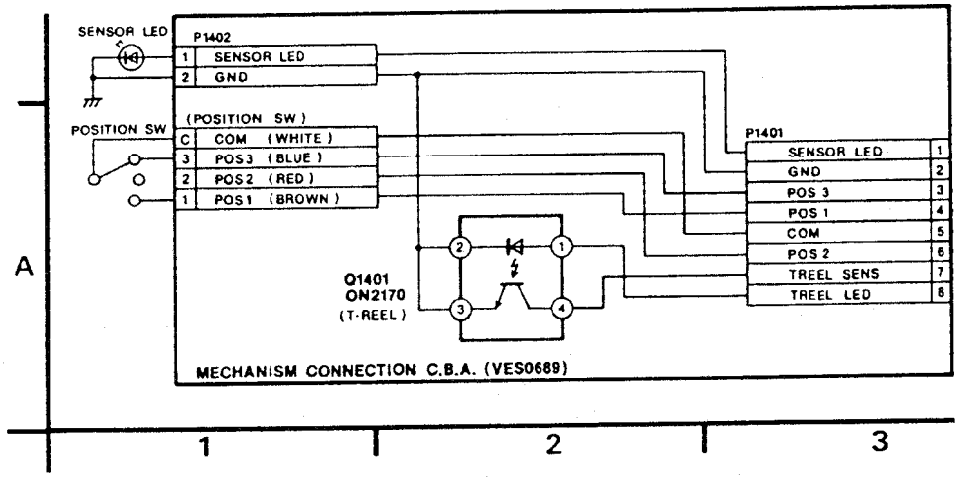

SECTION 4

CIRCUIT BOARDS

CONTENTS

VTR START C.B.A.(E21) ····· CBA-2
BATTERY C.B.A.(E23) ····· CBA-2
MECHANISM CONNECTION C.B.A.(E37) ····· CBA-2
MECH INTERFACE C.B.A.(E14) ····· CBA-3
REAR JACK C.B.A.(E6) ····· CBA-3
DC INPUT C.B.A.(E9) ····· CBA-3
VIDEO C.B.A.(E11) ····· CBA-4
VIDEO SUB C.B.A.(E12) ····· CBA-4
AUDIO/SYSTEM CONTROL C.B.A.(E13) ····· CBA-7
LCD C.B.A.(E30) ····· CBA-8
POWER SW C.B.A.(E26) ····· CBA-8
MODE CHECK C.B.A.(E25) ····· CBA-8
SUPER IRIS C.B.A.(E27) ····· CBA-9
MONITOR VR C.B.A.(E28) ····· CBA-9
TOGGLE SW C.B.A.(E29) ····· CBA-9
POWER C.B.A.(E10) ····· CBA-9
PROCESS C.B.A.(E15) ····· CBA-10
CAMERA OUT C.B.A.(E32) ····· CBA-10
H DEF C.B.A.(E1) ····· CBA-11
V DEF C.B.A.(E2) ····· CBA-11
CN C.B.A.(E3) ····· CBA-12
FRONT C.B.A.(E4) ····· CBA-12
CRT MASK C.B.A.(E5) ····· CBA-12
AV OUT C.B.A.(E8) ····· CBA-12
GEN LOCK C.B.A.(E31) ····· CBA-12
OPERATION C.B.A.(E24) ····· CBA-12
CCD PULSE C.B.A.(E19) ····· CBA-13
CCD DRIVE C.B.A.(E20) ····· CBA-14

VTR START C.B.A.(E21)

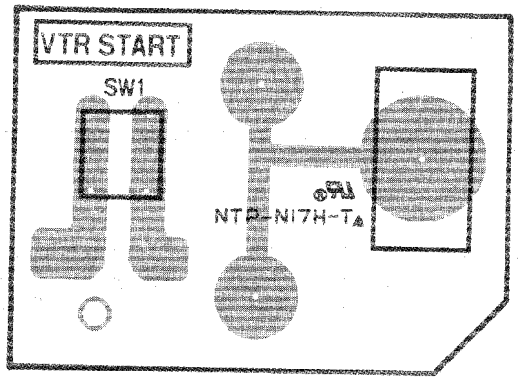

BATTERY C.B.A.(E23)

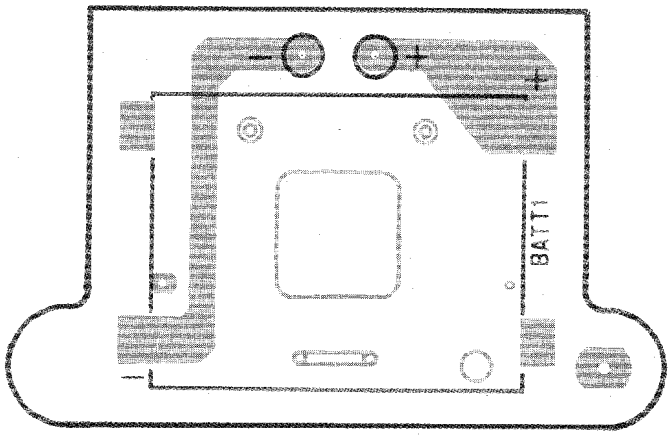

MECHANISM CONNECTION C.B.A. (E37)

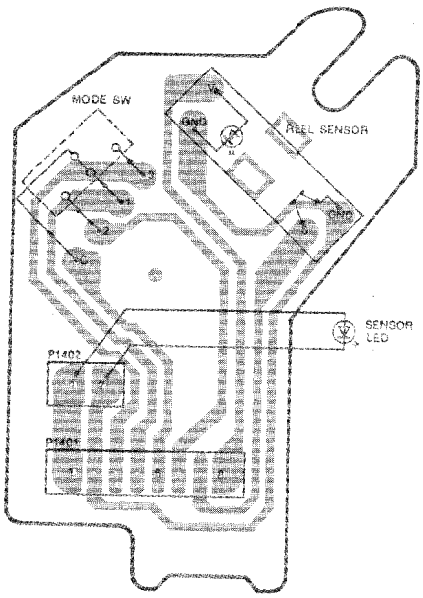

MECH INTERFACE C.B.A.(E14)

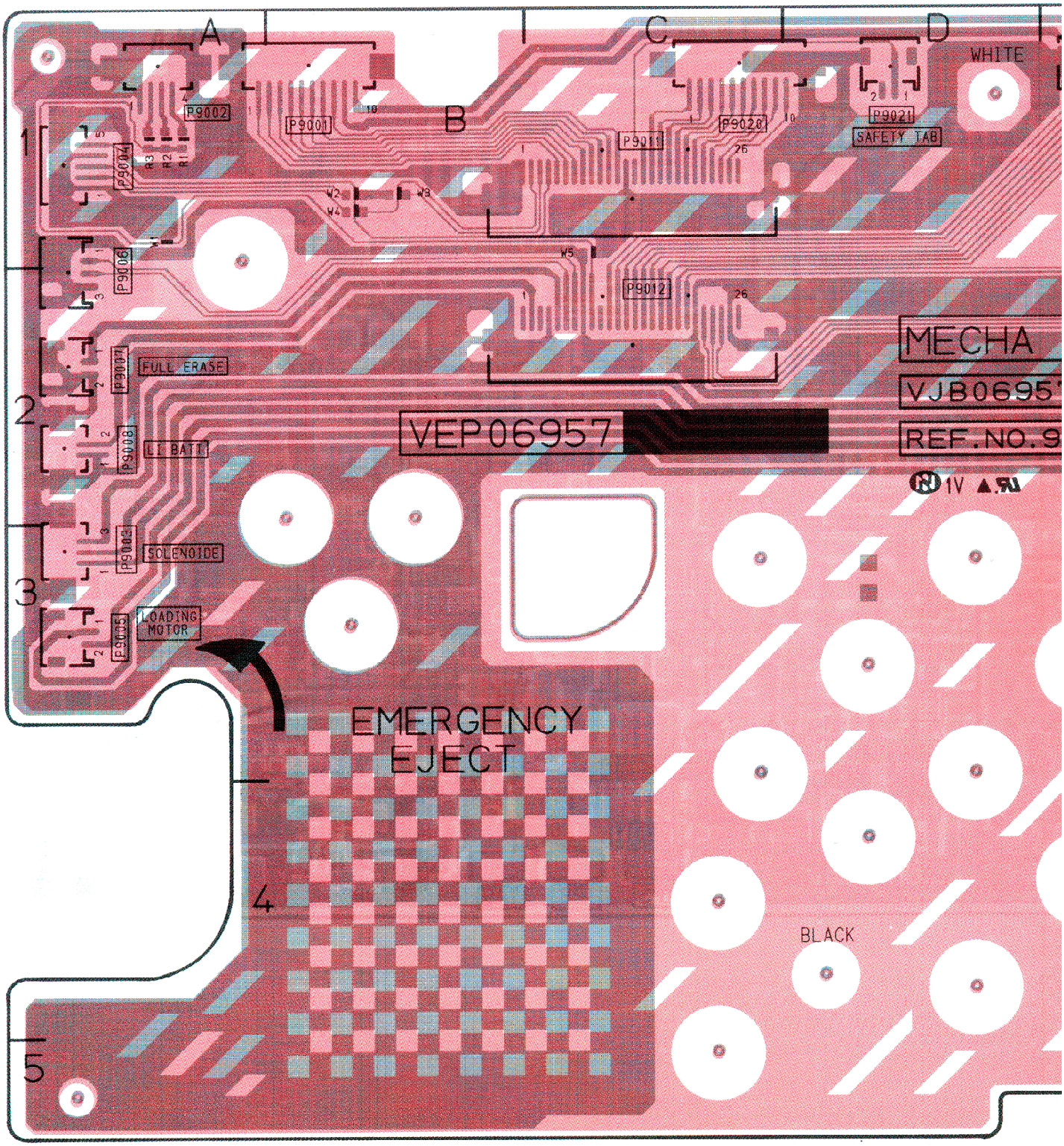

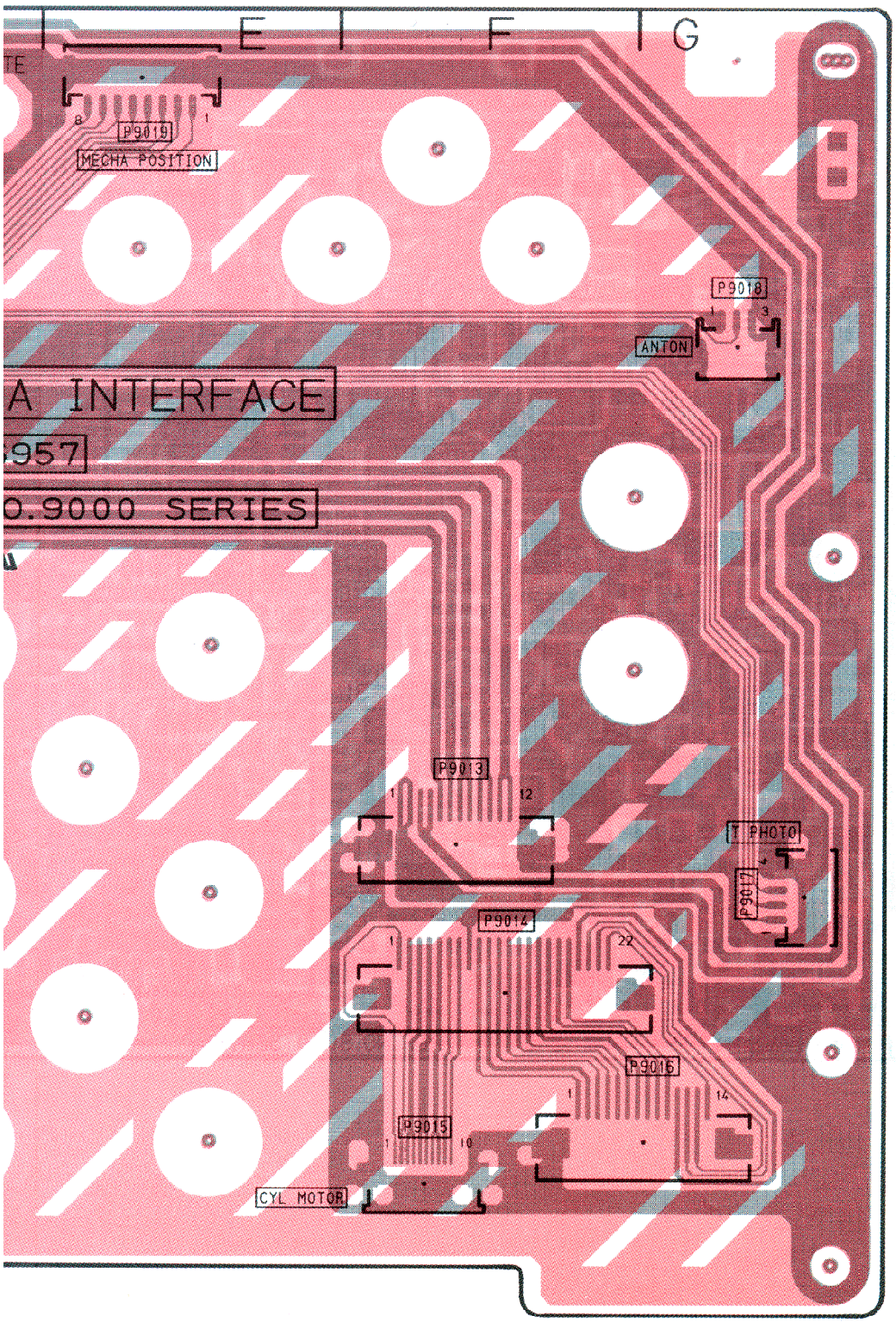

MECHA INTERFACE C.B.A.	
Connector	
P9001	B-1
P9002	A-1
P9003	A-3
P9004	A-1
P9005	A-3
P9006	A-2
P9007	A-2
P9008	A-2
P9011	C-1
P9012	C-2
P9013	F-3
P9014	F-4
P9015	F-4
P9016	G-4
P9017	G-3
P9018	G-2
P9019	E-1
P9020	C-1
P9021	D-1

ADDRESS INFORMATION

REAR JACK C.B.A.(E6)

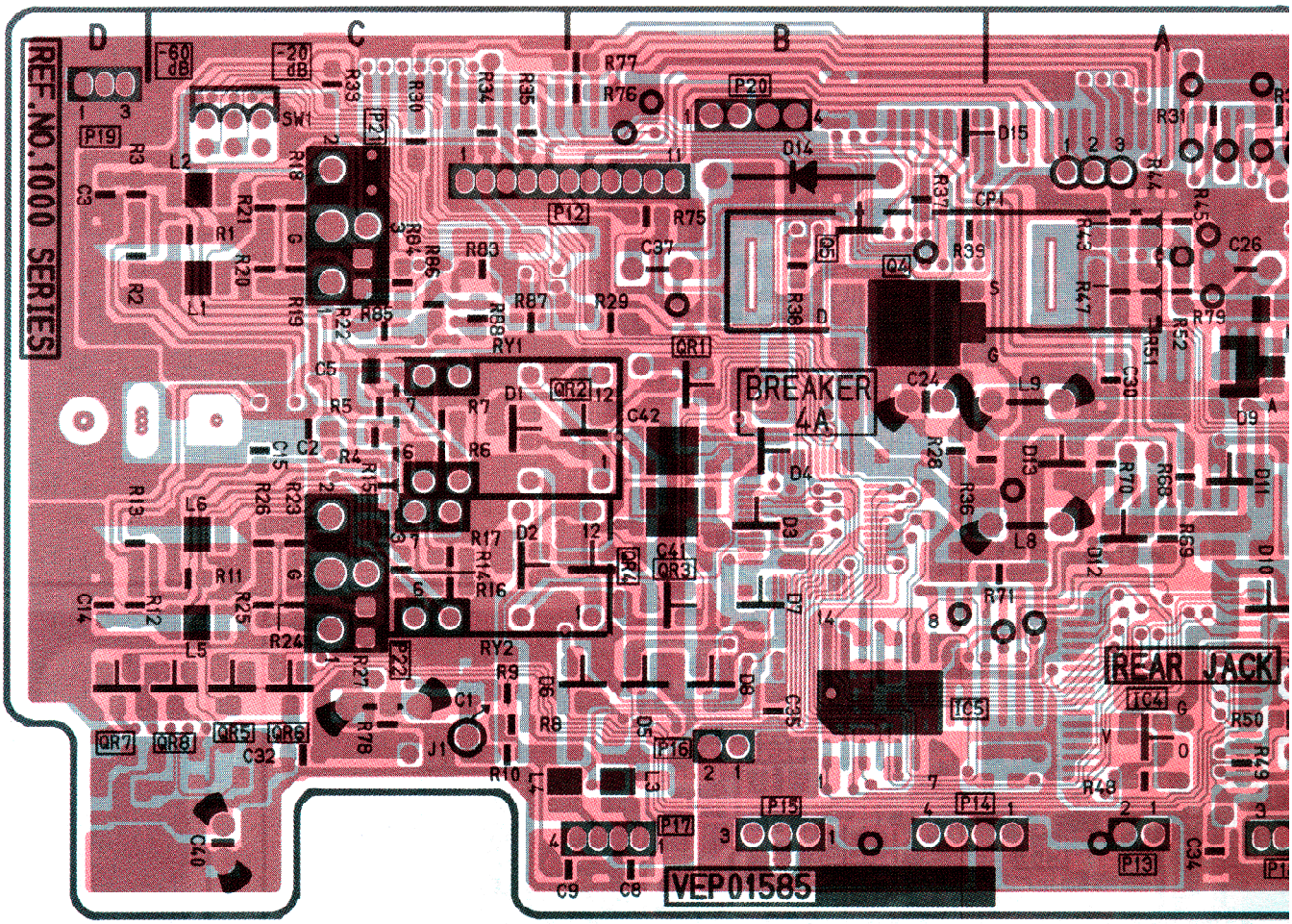

(FOIL

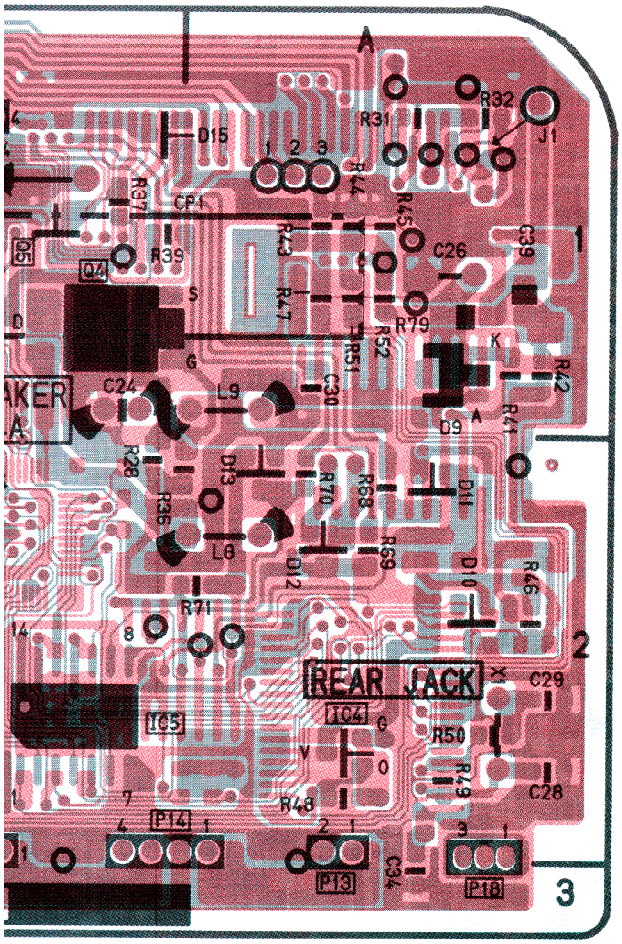

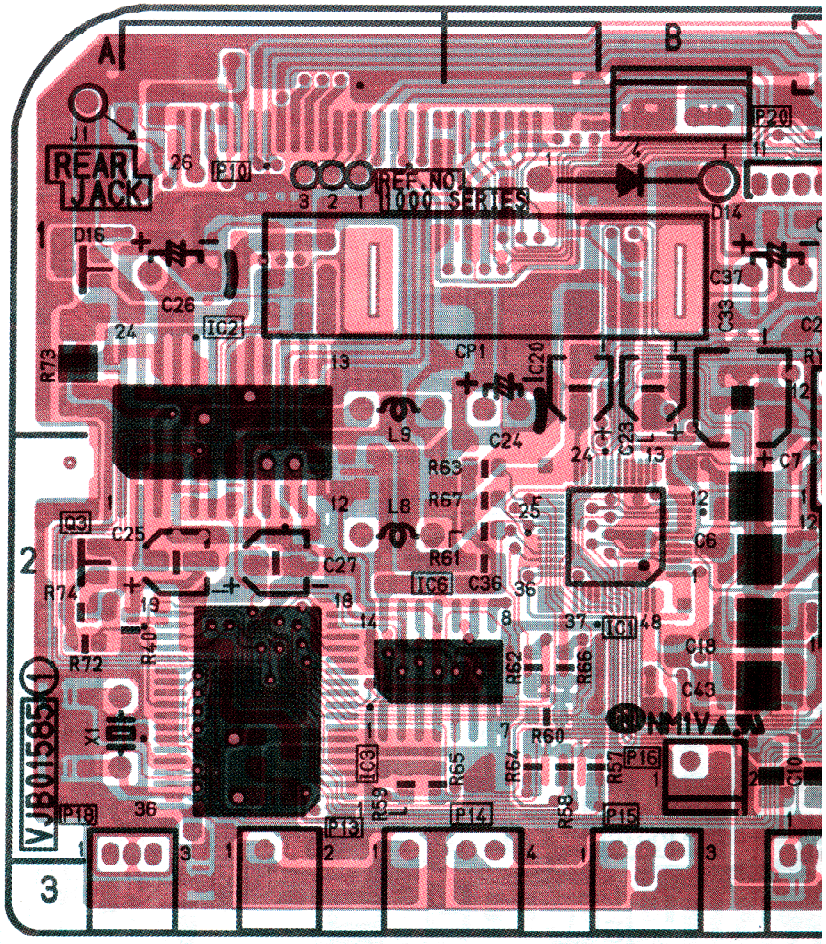

(FOIL SIDE)

DC INPUT
C.B.A.(E9)

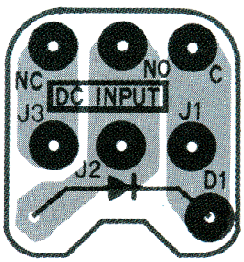

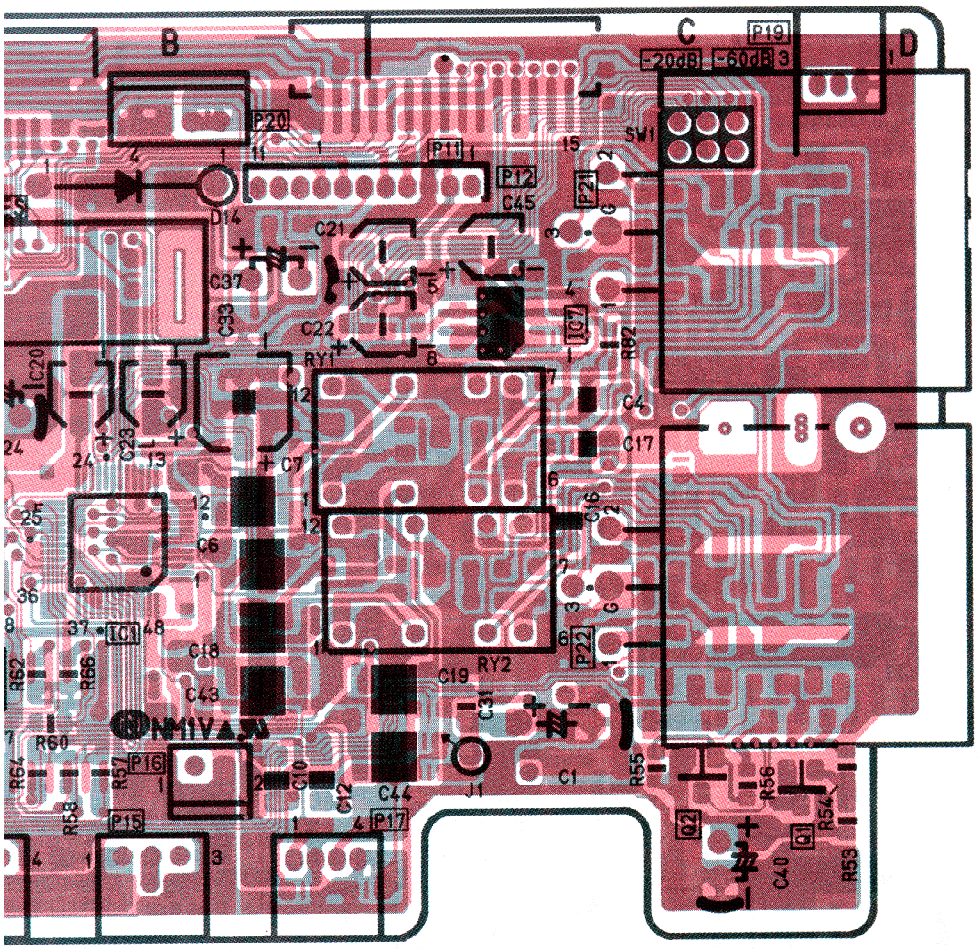

(COMPONENT SIDE)

REAR JACK C.B.A.	
Transistor	
Q1001	C-2 ©
Q1002	C-2 ©
Q1003	A-2 ©
Q1004	B-1 Ⓕ
Q1005	B-1 Ⓕ
Transistor & Resistor	
QR1001	B-1 Ⓕ
QR1002	C-1 Ⓕ
QR1003	B-2 Ⓕ
QR1004	B-2 Ⓕ
QR1005	C-2 Ⓕ
QR1006	C 2 Ⓕ
QR1007	D-2 Ⓕ
QR1008	C-2 Ⓕ
Integrated Circuit	
IC1001	B-2 ©
IC1002	A-1 ©
IC1003	A-2 ©
IC1004	A-2 Ⓕ
IC1005	B-2 Ⓕ
IC1006	A-2 Ⓕ
IC1007	C-1 ©
Connector	
P1010	A-1 ©
P1011	C-1 ©
P1012	B-1 Ⓕ
P1012	C-1 ©
P1013	A-3 Ⓕ
P1013	A-2 ©
P1014	B-2 Ⓕ
P1014	B-2 ©
P1015	B-2 Ⓕ
P1015	B-2 ©
P1016	B-2 Ⓕ
P1016	B-2 ©
P1017	B-2 Ⓕ
P1017	C-3 ©
P1018	A-3 Ⓕ
P1018	A-3 ©
P1019	D-1 Ⓕ
P1019	C-1 ©
P1020	B-1 Ⓕ
P1020	B-1 ©
P1021	C-1 Ⓕ
P1021	C-1 ©
P1022	C-2 ©
P1022	C-2 ©

ADDRESS INFORMATION
Ⓕ... FOIL SIDE
©... COMPONENT SIDE

VIDEO C.B.A.(E11)

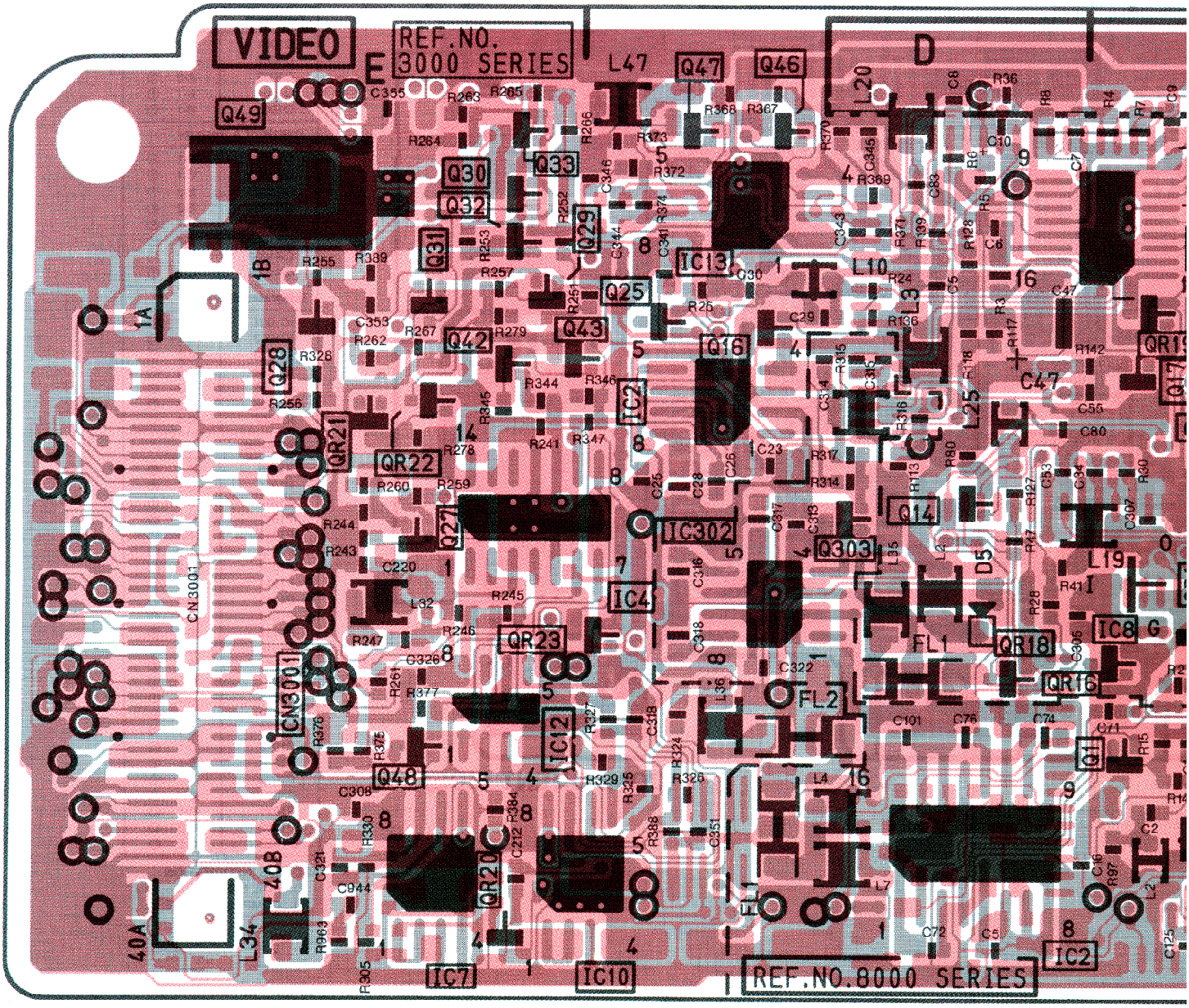

VIDEO SUB C.B.A.(E12)

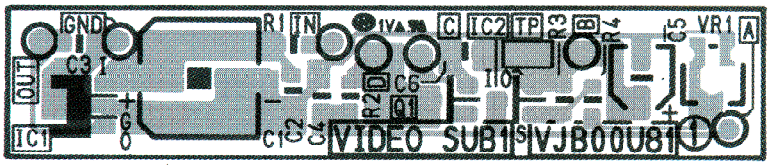

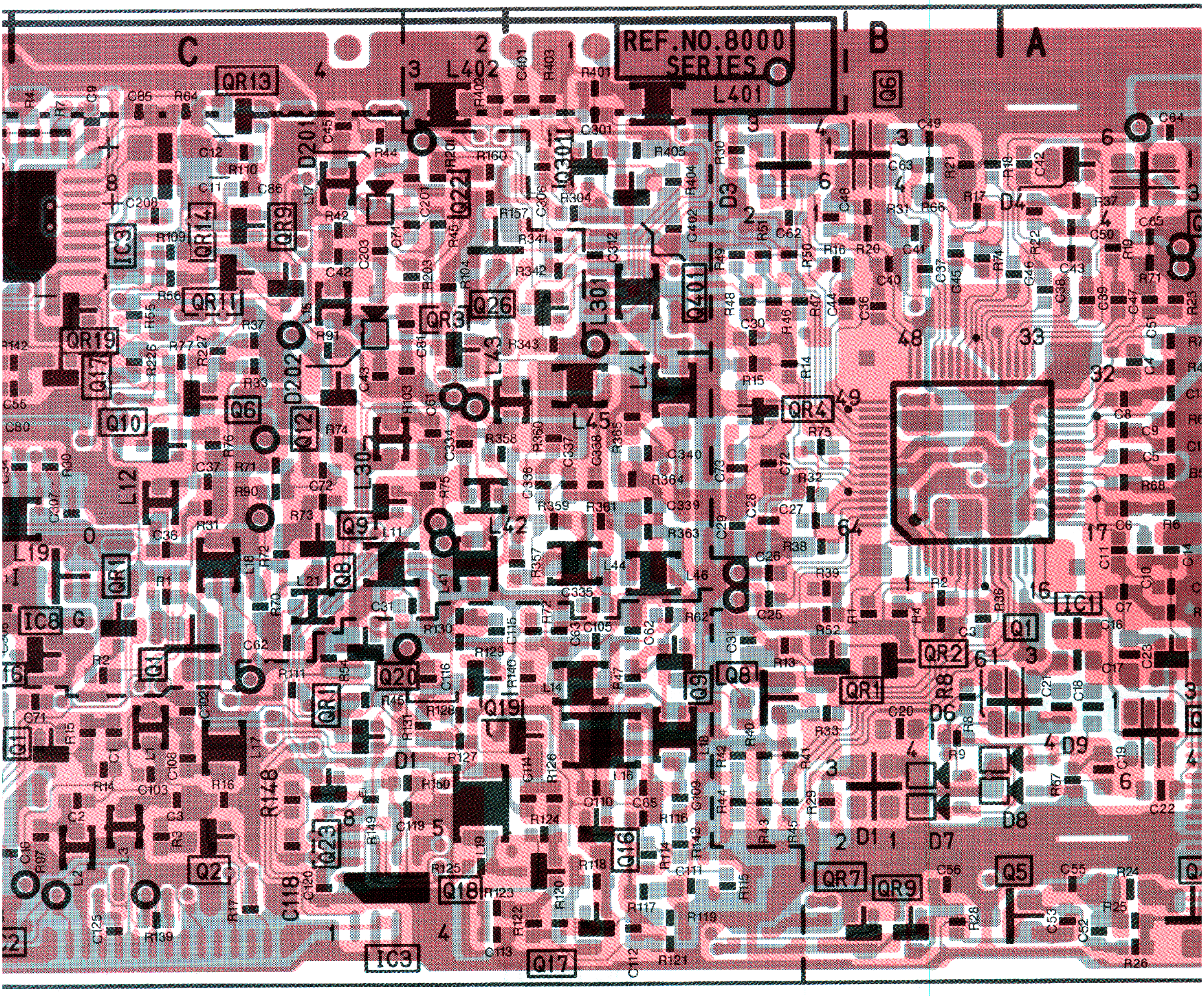

C
B
A
REF.NO.8000
SERIES
L401
L402

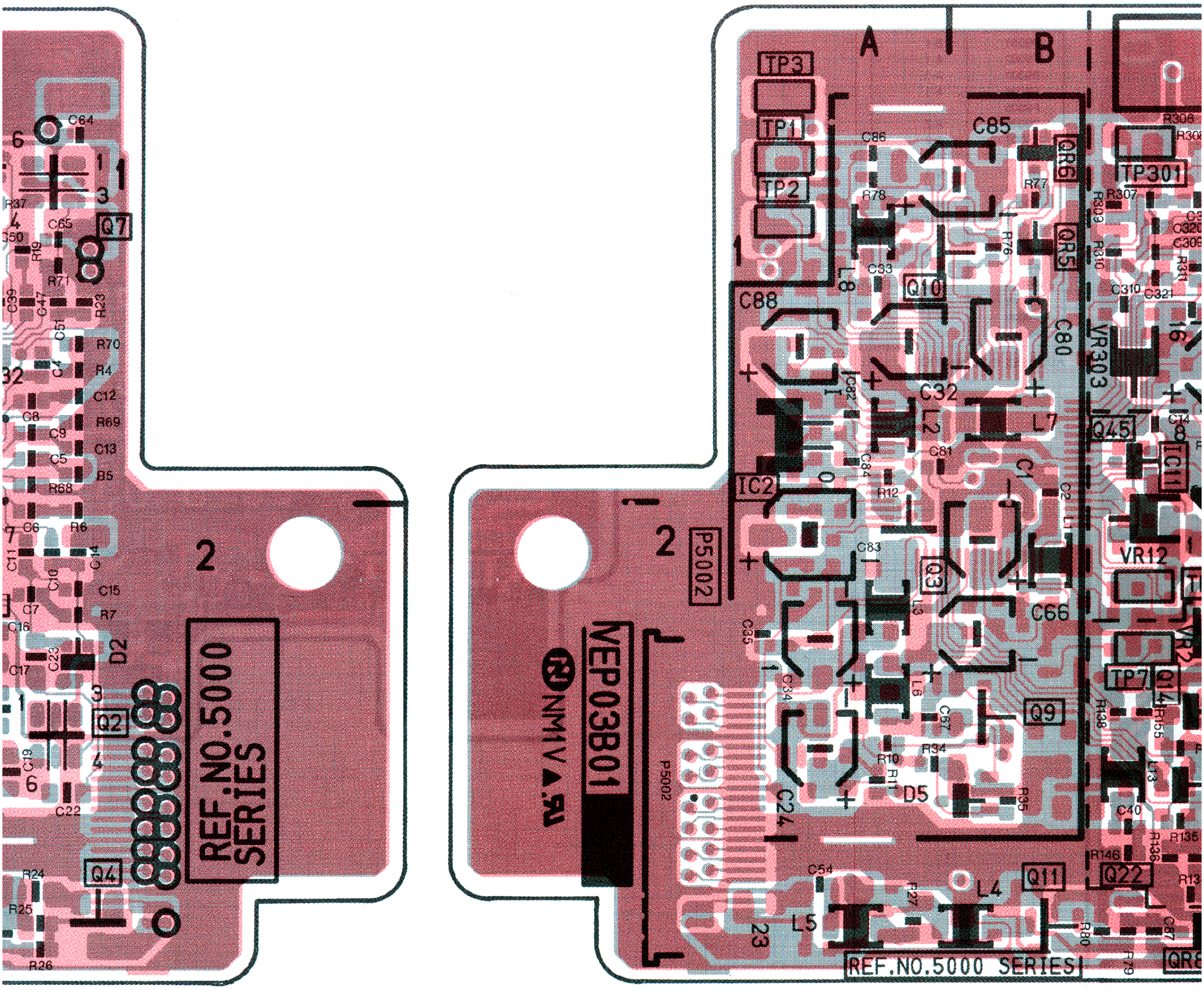
REF.NO.5000 SERIES
VEP03B01
P5002
IC2
Q2
Q4
Q7
Q9
Q10
Q11
Q3
QR5
QR6
TP1
TP2
TP3
TP301
C85
C88
C80
C32
C66
C24
L4
L5
L7
D2
D5
VR303
VR12
REF.NO.5000 SERIES

(FOIL SIDE)

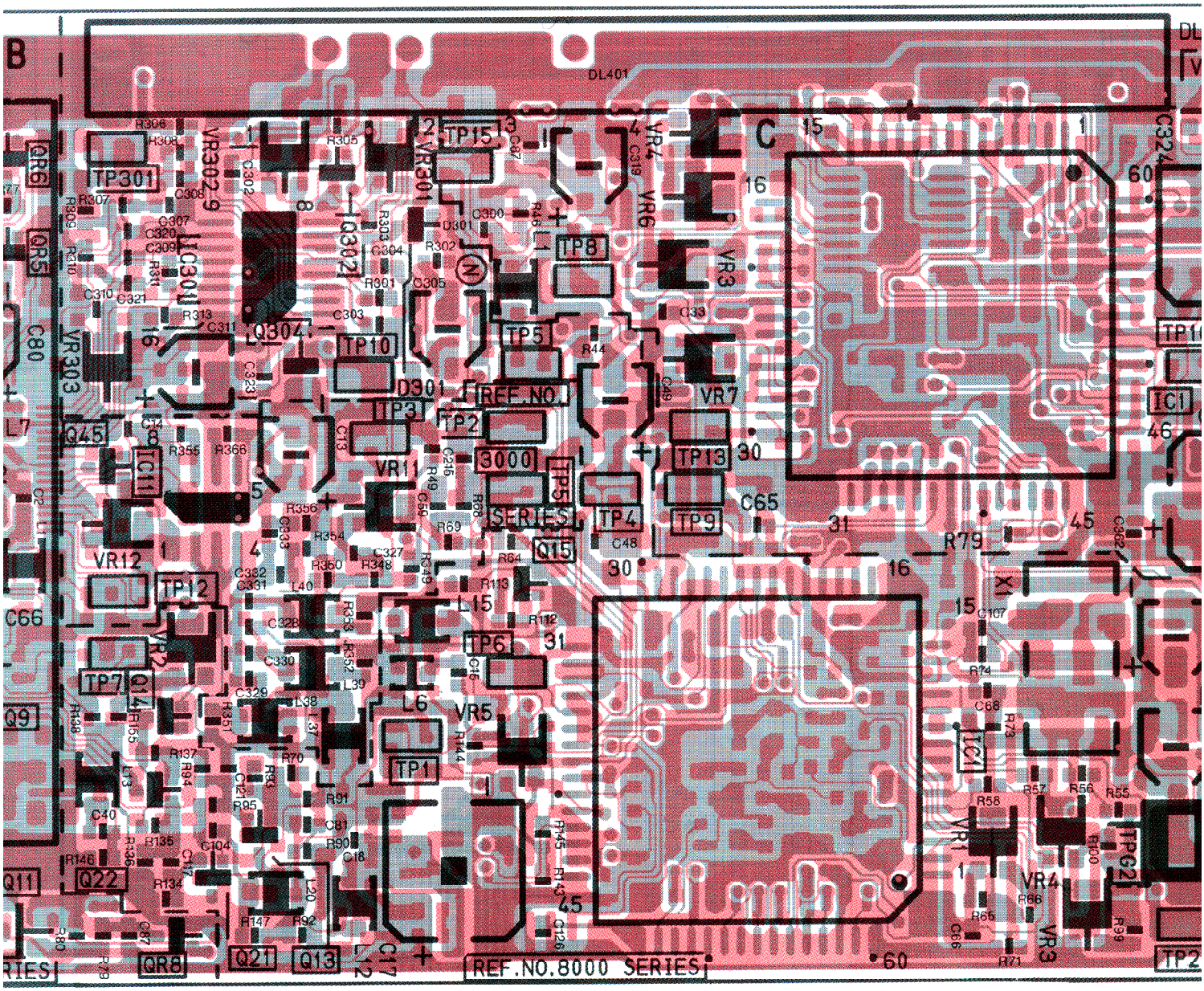

B
C
DL401
TP301
TP15
TP8
TP5
TP10
TP3
TP2
TP13
TP4
TP9
TP6
TP1
TP7
TP12
TP2
REF.NO.
3000
SERIES
REF.NO.8000 SERIES
VR302
VR301
VR303
VR4
VR6
VR3
VR7
VR11
VR12
VR2
VR5
VR1
VR4
VR3
IC301
IC11
IC1
IC1
Q302
Q304
Q45
Q15
Q14
Q22
Q21
Q13
Q11
Q9
QR6
QR5
QR8
C80
C66
C65
C324
R79
X1

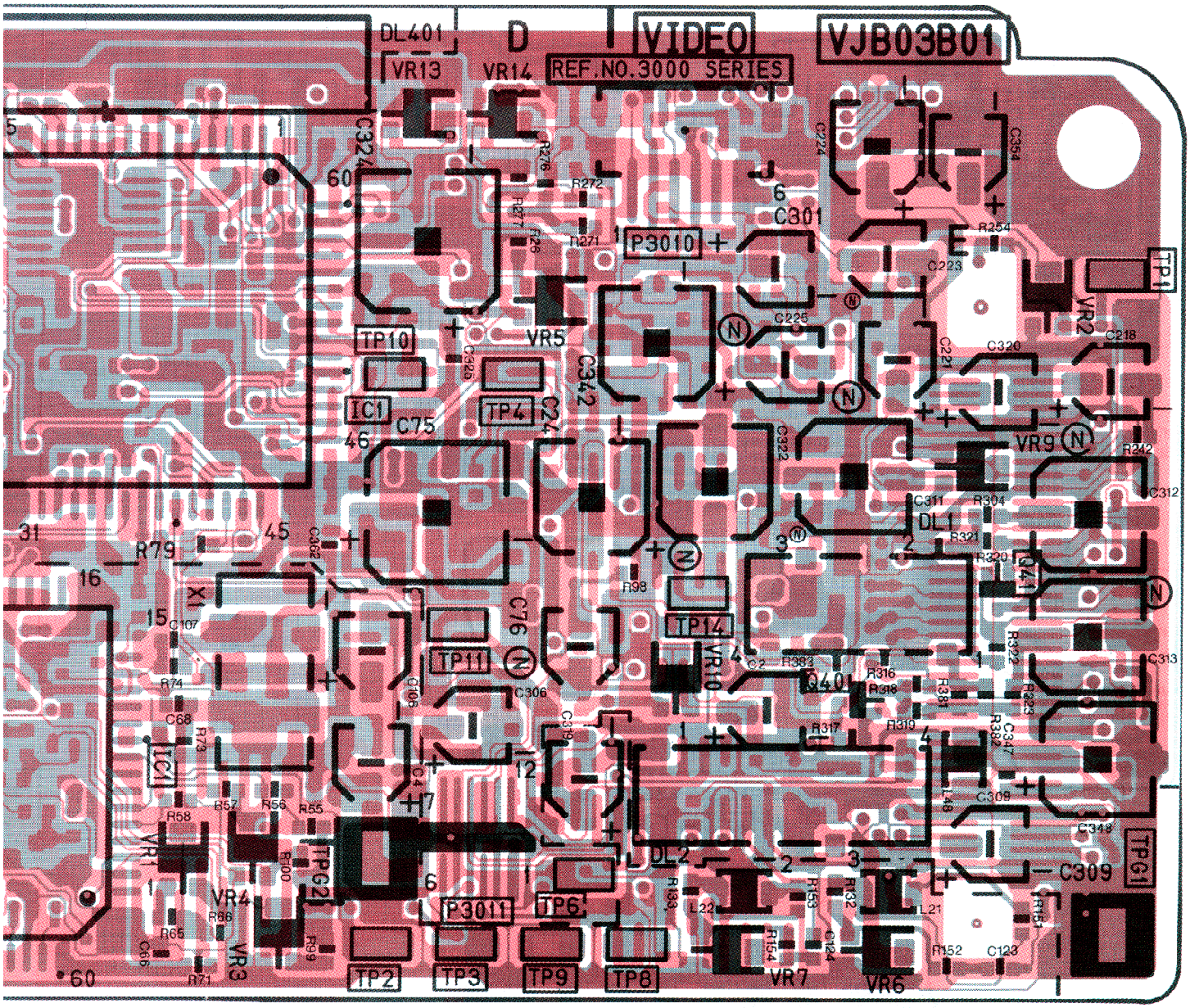
VIDEO
VJB03B01
REF.NO.3000 SERIES
D
E
DL401
VR13
VR14
P3010
P3011
C301
VR5
TP10
TP4
IC1
C75
C76
TP11
TP14
VR10
Q401
DL1
DL2
VR9
VR2
VR7
VR6
TP1
TP2
TP3
TP9
TP8
TP6
TP2
VR1
VR4
VR3
X1
R79
C309
C306
C107
C68
C66
R74
R73
R71
R65
R66
R68
R57
R56
R55
R100
R99
R98
R272
R271
R276
R27
R26
C324
C325
C342
C322
C224
C354
C223
C225
C221
C320
C218
C311
R304
R321
R320
R322
R316
R318
R319
R317
R381
R382
C347
C349
L41
L48
L22
L21
R153
R154
R152
C124
C123
R151
R242
C312
C313
C2
C4
C5
C6
C7
C8
C9
C10
C11
C12
C13
C14
C15
C16
C17
C18
C19
C20
C21
C22
C23
C24
C25
C26
C27
C28
C29
C30
C31
C32
C33
C34
C35
C36
C37
C38
C39
C40
C41
C42
C43

VIDEO C.B.A.

Transistor

Q3001	C-2	(F)
Q3006	C-1	(F)
Q3008	C-2	(F)
Q3009	C-1	(F)
Q3010	C-1	(F)
Q3012	C-1	(F)
Q3014	D-1	(F)
Q3016	D-1	(F)
Q3017	C-1	(F)
Q3022	C-1	(F)
Q3025	D-1	(F)
Q3026	B-1	(F)
Q3027	E-2	(F)
Q3028	E-1	(F)
Q3029	E-1	(F)
Q3030	E-1	(F)
Q3031	E-1	(F)
Q3032	E-1	(F)
Q3033	E-1	(F)
Q3040	E-2	(C)
Q3041	E-2	(C)
Q3042	E-1	(F)
Q3043	E-1	(F)
Q3045	B-1	(C)
Q3046	D-1	(F)
Q3047	D-1	(F)
Q3048	E-2	(F)
Q3049	E-1	(F)
Q5001	A-2	(F)
Q5002	A-2	(F)
Q5003	A-2	(C)
Q5004	A-2	(F)
Q5005	A-2	(F)
Q5006	B-1	(F)
Q5007	A-1	(F)
Q5008	B-2	(F)
Q5009	B-2	(C)
Q5010	A-1	(C)
Q5011	B-2	(C)
Q8001	C-2	(F)
Q8002	C-2	(F)
Q8009	B-2	(F)
Q8013	B-2	(C)
Q8014	B-2	(C)
Q8015	C-2	(C)
Q8016	B-2	(F)
Q8017	B-2	(F)
Q8018	C-2	(F)
Q8019	B-2	(F)
Q8020	C-2	(F)
Q8021	B-2	(C)
Q8022	B-2	(C)
Q8023	C-2	(F)
Q8301	B-1	(F)
Q8302	B-1	(C)
Q8303	D-2	(F)
Q8304	B-1	(C)
Q8401	B-1	(F)

Transistor & Resistor

QR3001	C-2	(F)
QR3003	C-1	(F)
QR3009	C-1	(F)
QR3011	C-1	(F)
QR3013	C-1	(F)
QR3014	C-1	(F)
QR3016	D-2	(F)
QR3018	D-2	(F)
QR3019	C-1	(F)
QR3020	E-2	(F)
QR3021	E-1	(F)
QR3022	E-1	(F)
QR3023	D-2	(F)
QR5001	B-2	(F)
QR5002	B-2	(F)
QR5004	B-1	(F)
QR5005	A-1	(C)
QR5006	A-1	(C)
QR5007	B-2	(F)
QR5008	B-2	(C)
QR5009	B-2	(F)
QR8001	C-2	(F)

Integrated Circuit

IC3001	D-1	(C)
IC3002	D-1	(F)
IC3003	C-1	(F)
IC3004	E-2	(F)
IC3007	E-2	(F)
IC3008	C-2	(F)
IC3010	E-2	(F)
IC3011	B-1	(C)
IC3012	E-2	(F)
IC3013	D-1	(F)
IC5001	A-2	(F)
IC8001	D-2	(C)
IC8002	D-2	(F)
IC8003	C-2	(F)
IC8301	B-1	(C)
IC8302	D-2	(F)

Test Point

TP3001	E-1	(C)
TP3002	C-1	(C)
TP3003	B-1	(C)
TP3004	D-1	(C)
TP3005	C-1	(C)
TP3006	D-2	(C)
TP3008	E-2	(C)
TP3009	C-1	(C)
TP3010	D-1	(C)
TP3011	D-2	(C)
TP3012	B-2	(C)
TP3013	C-1	(C)
TP3014	E-2	(C)
TP3015	C-1	(C)
TP5001	A-1	(C)
TP5002	A-1	(C)
TP5003	A-1	(C)
TP8001	B-2	(C)
TP8002	D-2	(C)
TP8003	D-2	(C)
TP8004	C-1	(C)
TP8005	C-1	(C)
TP8006	C-2	(C)
TP8007	B-2	(C)
TP8008	C-1	(C)
TP8009	D-2	(C)
TP8010	B-1	(C)
TP8301	B-1	(C)
TPG1	E-2	(C)
TPG8002	D-2	(C)

Adjustment

VR3002	E-1	(C)
VR3003	C-1	(C)
VR3004	C-1	(C)
VR3005	D-1	(C)
VR3006	C-1	(C)
VR3007	C-1	(C)
VR3009	E-1	(C)
VR3010	E-2	(C)
VR3011	B-1	(C)
VR3012	B-2	(C)
VR3013	D-1	(C)
VR3014	D-1	(C)
VR8001		
VR8002	B-2	(C)
VR8003	D-2	(C)
VR8004	D-2	(C)
VR8006	E-2	(C)
VR8007	E-2	(C)
VR8301	D-2	(C)
VR8302	B-1	(C)
VR8303	B-1	(C)

Connector

CN3001	E-2	(F)
P3010	E-1	(C)
P3011	D-2	(C)
P5002	A-2	(C)

ADDRESS INFORMATION
(F)...FOIL SIDE
(C)...COMPONENT SIDE

AUDIO & SYSCON C.B.A.

Transistor

Q4101	C-3	Ⓕ
Q4102	C-3	Ⓕ
Q4103	D-2	Ⓕ
Q4104	D-2	Ⓕ
Q4105	A-3	Ⓕ
Q4106	A-3	Ⓕ
Q4107	A-3	Ⓕ
Q4108	C-3	Ⓕ
Q4201	C-3	Ⓕ
Q4202	C-3	Ⓕ
Q4203	D-3	Ⓕ
Q4204	D-3	Ⓕ
Q4205	A-3	Ⓕ
Q4206	A-3	Ⓕ
Q4207	A-3	Ⓕ
Q4208	D-3	Ⓕ
Q4301	D-2	Ⓕ
Q4401	D-2	Ⓕ
Q4501	B-3	Ⓕ
Q4502	B-3	Ⓕ
Q4503	B-3	Ⓕ
Q4504	B-3	Ⓕ
Q4601	F-3	Ⓕ
Q4603	C-2	Ⓕ
Q4604	C-2	Ⓕ
Q4605	D-3	Ⓕ
Q4606	D-3	Ⓕ
Q4701	A-2	Ⓕ
Q6001	E-1	Ⓕ
Q6003	E-1	Ⓒ
Q6501	D-1	Ⓕ

Transistor & Resistor

QR4101	C-2	Ⓕ
QR4102	A-2	Ⓕ
QR4103	C-2	Ⓕ
QR4201	C-2	Ⓕ
QR4202	B-3	Ⓕ
QR4203	B-2	Ⓕ
QR4501	A-3	Ⓕ
QR4502	B-3	Ⓕ
QR4503	C-3	Ⓕ
QR4504	A-3	Ⓕ
QR4505	C-2	Ⓕ
QR4506	A-3	Ⓕ
QR4507	C-2	Ⓕ
QR4508	C-2	Ⓕ
QR4510	A-2	Ⓕ
QR4511	A-2	Ⓕ
QR4512	C-3	Ⓕ
QR4513	C-3	Ⓕ
QR4601	F-3	Ⓕ
QR4603	C-2	Ⓕ
QR4604	D-3	Ⓕ
QR4605	C-2	Ⓕ
QR4606	D-3	Ⓕ
QR4607	D-3	Ⓕ
QR4701	A-2	Ⓕ
QR4702	A-2	Ⓕ
QR4703	A-2	Ⓕ
QR4704	A-2	Ⓕ
QR6001	E-1	Ⓕ
QR6002	E-1	Ⓕ
QR6003	D-1	Ⓕ
QR6501	D-1	Ⓕ
QR6502	A-1	Ⓕ
QR6503	A-1	Ⓕ
QR6504	C-1	Ⓕ
QR6505	D-1	Ⓕ
QR6512	C-1	Ⓒ
QR6513	B-1	Ⓕ
QR6514	B-1	Ⓕ
QR6515	A-1	Ⓕ
QR6516	A-1	Ⓕ
QR6517	B-1	Ⓕ

Integrated Circuit

IC4101	B-2	Ⓒ
IC4102	B-2	Ⓕ
IC4201	B-3	Ⓒ
IC4202	B-3	Ⓕ
IC4501	D-3	Ⓒ
IC4502	C-2	Ⓕ
IC4503	C-3	Ⓕ
IC4601	E-3	Ⓕ
IC4602	D-2	Ⓒ
IC4603	E-2	Ⓕ
IC4604	E-2	Ⓒ
IC4701	A-3	Ⓕ
IC6001	E-1	Ⓒ
IC6002	E-1	Ⓒ
IC6004	E-1	Ⓕ
IC6501	C-1	Ⓕ
IC6502	C-1	Ⓒ
IC6503	C-1	Ⓒ
IC6505	C-1	Ⓒ
IC6506	D-1	Ⓒ
IC6801	B-1	Ⓕ
IC6803	A-1	Ⓕ
IC6804	B-1	Ⓕ

Test Point

TP4101	A-2	Ⓒ
TP4102	A-2	Ⓒ
TP4103	B-2	Ⓒ
TP4201	B-3	Ⓒ
TP4202	B-3	Ⓒ
TP4203	B-2	Ⓒ
TP4301	D-2	Ⓒ
TP4302	E-3	Ⓒ
TP4401	D-2	Ⓒ
TP4402	E-3	Ⓒ
TP4403	E-2	Ⓒ
TP4701	A-3	Ⓒ
TP6002	C-2	Ⓒ
TP6005	C-2	Ⓒ
TP6006	D-1	Ⓒ
TP6502	C-2	Ⓒ
TP6503	C-2	Ⓒ
TPG4001	C-2	Ⓒ
TPG6001	F-1	Ⓒ

Adjustment

VC6501	C-1	Ⓒ
VR4101	D-2	Ⓒ
VR4102	B-2	Ⓒ
VR4103	B-2	Ⓒ
VR4104	C-2	Ⓒ
VR4105	A-3	Ⓒ
VR4106	A-3	Ⓒ
VR4201	D-3	Ⓒ
VR4202	B-3	Ⓒ
VR4203	B-3	Ⓒ
VR4204	C-2	Ⓒ
VR4205	A-3	Ⓒ
VR4206	A-3	Ⓒ
VR4301	E-3	Ⓒ
VR4302	D-2	Ⓒ
VR4303	D-2	Ⓒ
VR4401	D-3	Ⓒ
VR4402	E-3	Ⓒ
VR4403	E-3	Ⓒ
VR4601	F-3	Ⓒ
VR6001	D-1	Ⓒ

Connector

CN6001	F-2	Ⓕ
P4001	A-3	Ⓒ
P6002	B-1	Ⓒ
P6003	A-1	Ⓒ
P6004	D-3	Ⓒ

ADDRESS INFORMATION
Ⓕ...FOIL SIDE
Ⓒ...COMPONENT SIDE

AUDIO／SYSTEM CONTROL C.B.A.(E13)

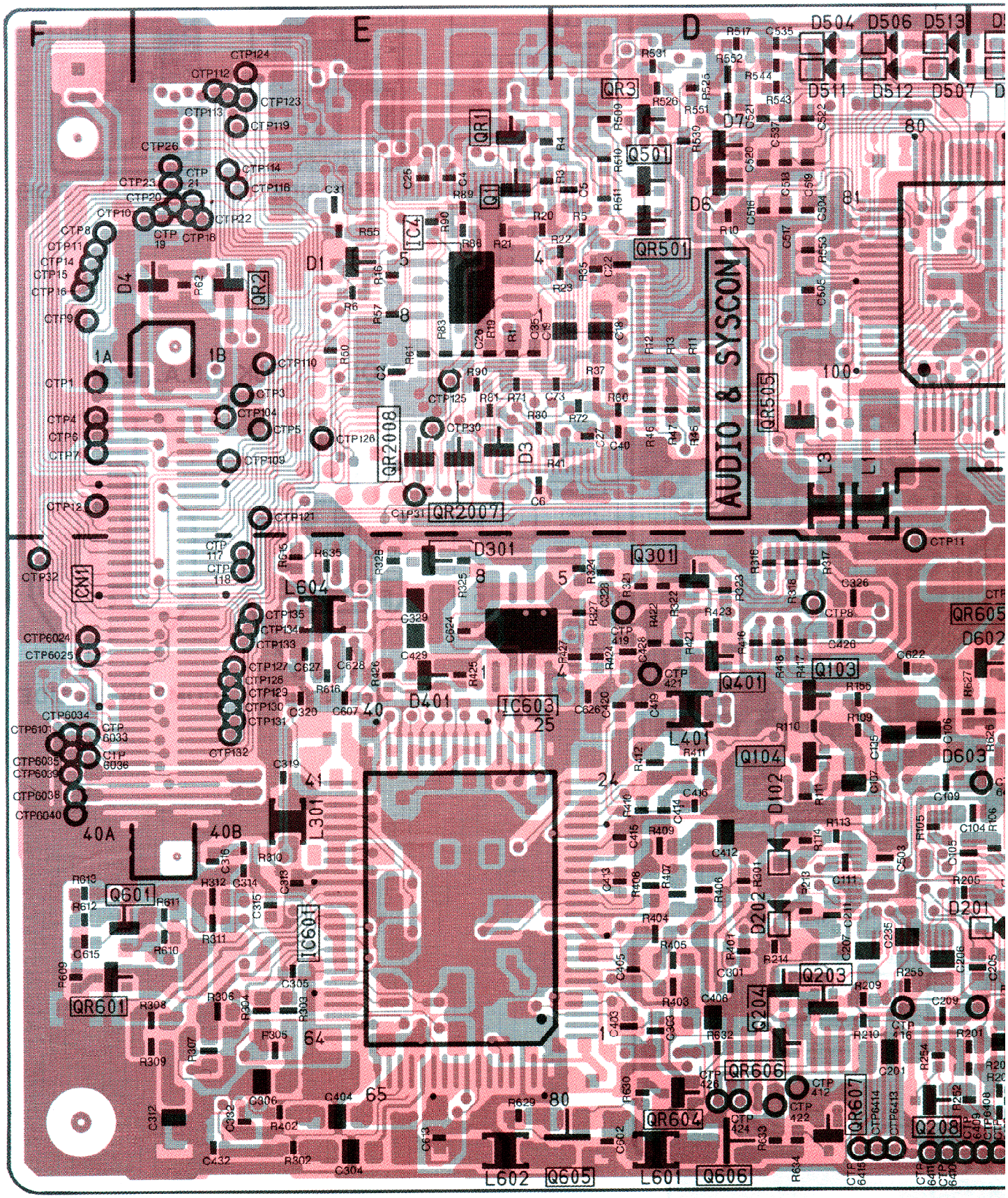

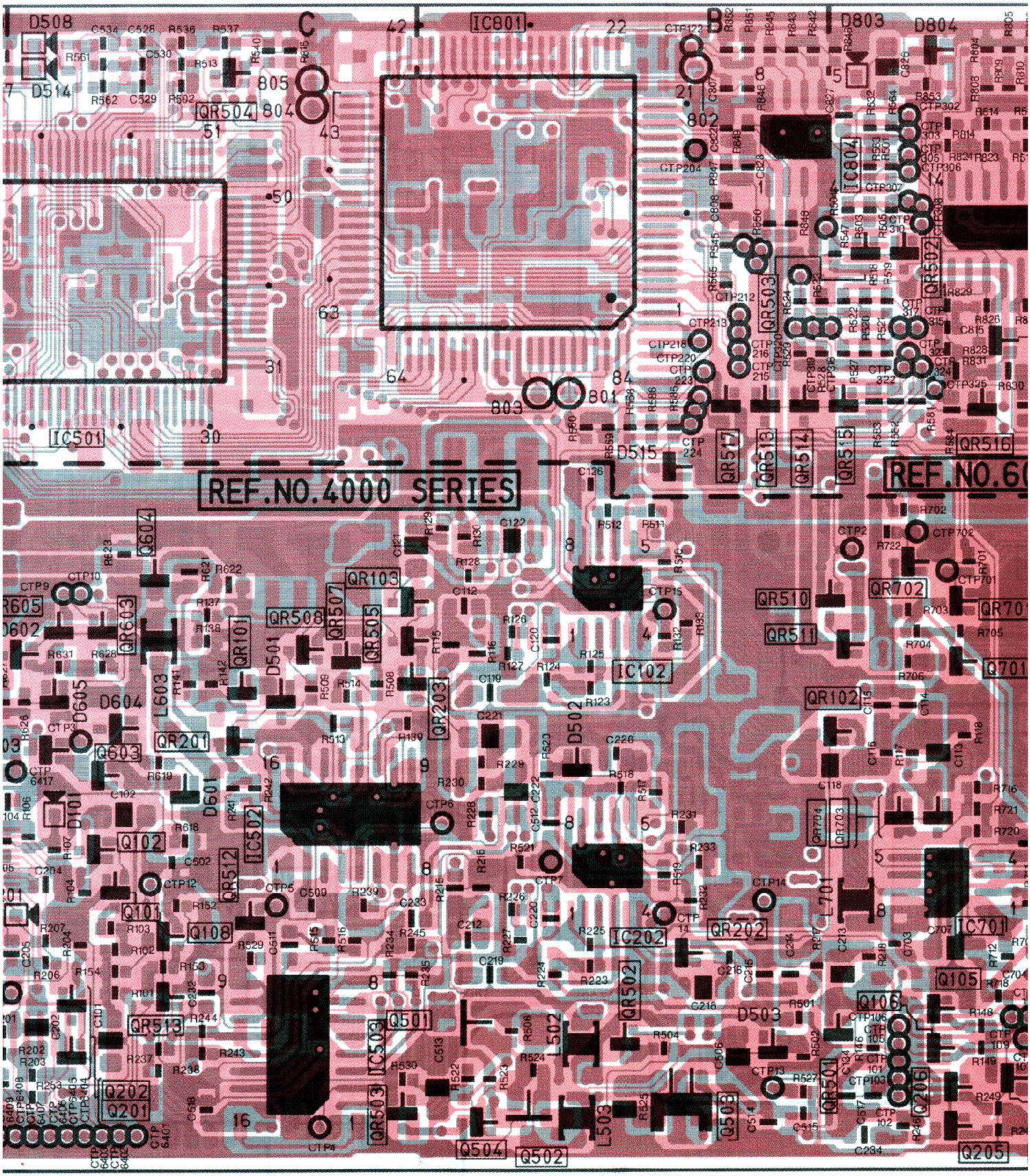
REF.NO.4000 SERIES
REF.NO.6
IC801
IC501
IC804
IC102
IC202
IC701
IC502
IC503
QR504
QR503
QR502
QR517
QR513
QR514
QR515
QR516
QR510
QR511
QR702
QR102
QR103
QR508
QR507
QR505
QR101
QR203
QR201
QR512
QR513
QR502
QR503
QR501
QR704
QR703
QR202
Q604
Q603
Q601
Q102
Q101
Q108
Q501
Q502
Q504
Q503
Q202
Q201
Q105
Q106
Q205
Q701
D508
D514
D803
D804
D515
D501
D502
D503
D604
D605
D601
D101
L603
L502
L503
L701
L502
L503
C
B

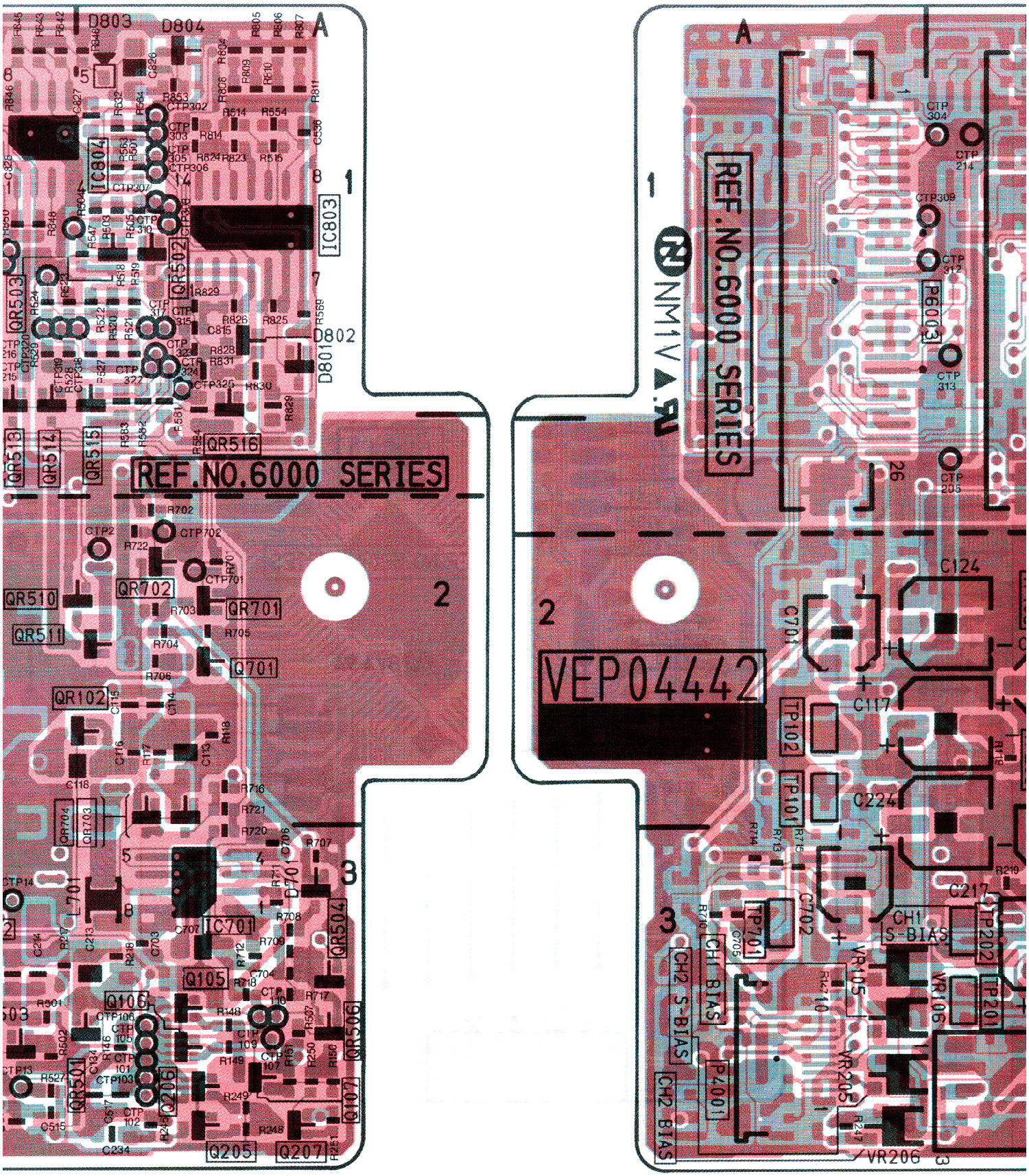
REF.NO.6000 SERIES
REF.NO.6000 SERIES
VEP04442
IC803
IC804
IC701
D802
D803
D804
QR503
QR513
QR514
QR515
QR516
QR702
QR701
QR510
QR511
QR102
Q701
Q105
Q106
Q205
Q207
QR504
QR506
QR507
Q107
Q209
QR501
TP102
TP101
TP701
TP202
TP201
P6003
P4001
CH1 S-BIAS
CH2 S-BIAS
CH1 BIAS
CH2 BIAS
VR105
VR106
VR205
VR206
C124
C117
C2224
C217
C701
C702
(FOIL SIDE)

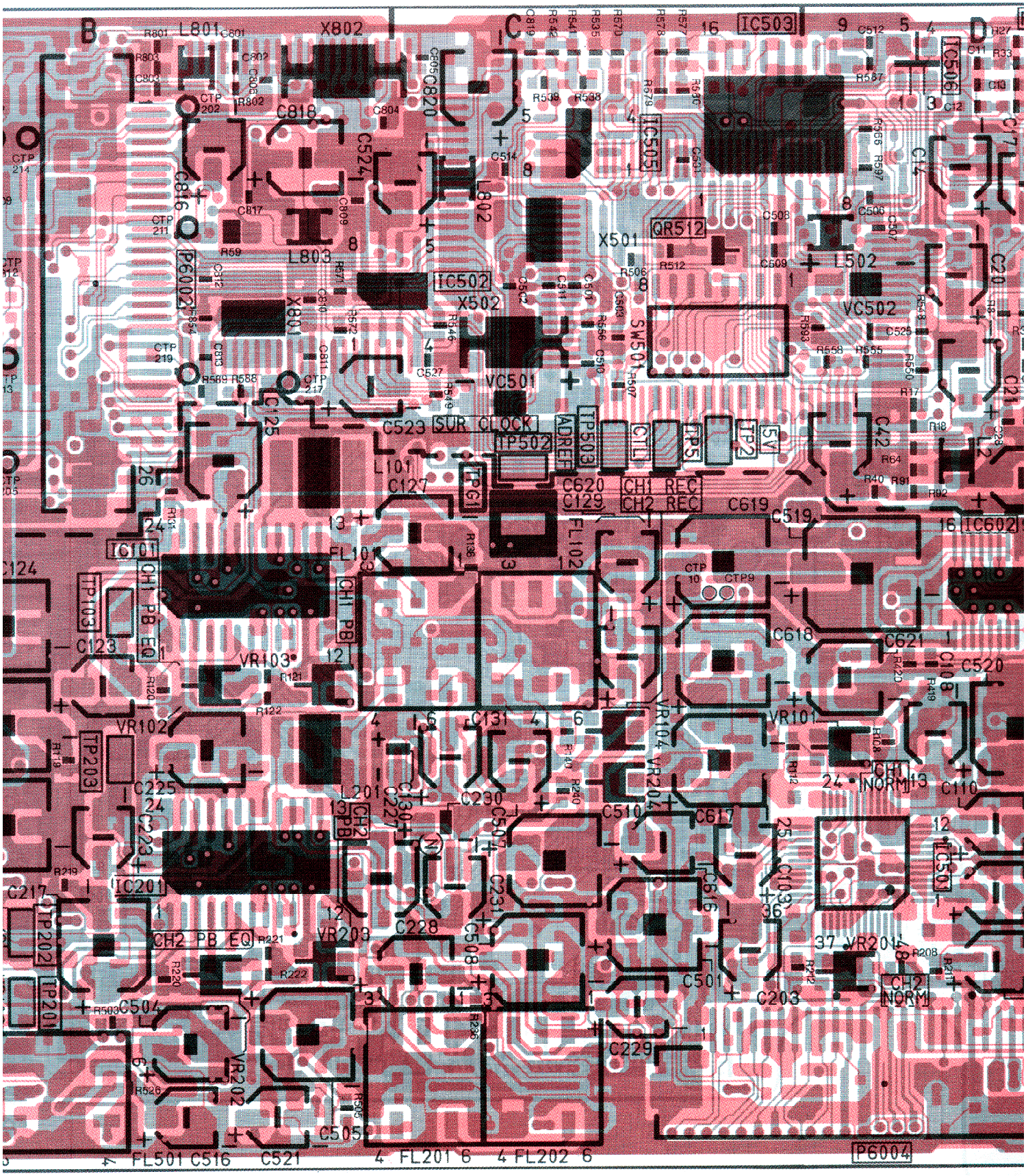

B
C
D
L801
X802
IC503
IC506
IC505
C818
C820
C524
L802
L803
X501
QR512
L502
VC502
IC502
X502
X801
P6002
SW501
VC501
C523
SUR CLOCK
TP502
ADREF
TP503
CTL
TP5
TP2
5V
C42
L101
C127
TPG1
C620
C129
CH1 REC
CH2 REC
C619
C519
IC602
IC101
FL101
FL102
CTP9
C618
C621
C520
C124
TP103
CH1 PB EQ
CH1 PB
C123
VR103
VR102
VR101
VR104
VR204
C131
TP203
C225
L201
C230
C510
C617
CH1 NORM
C110
C223
CH2 PB
IC201
C217
TP202
CH2 PB EQ
VR203
C228
C231
C508
C616
C103
IC501
VR201
C501
C203
CH2 NORM
TP201
C504
C229
VR202
C505
FL501
C516
C521
FL201
FL202
P6004

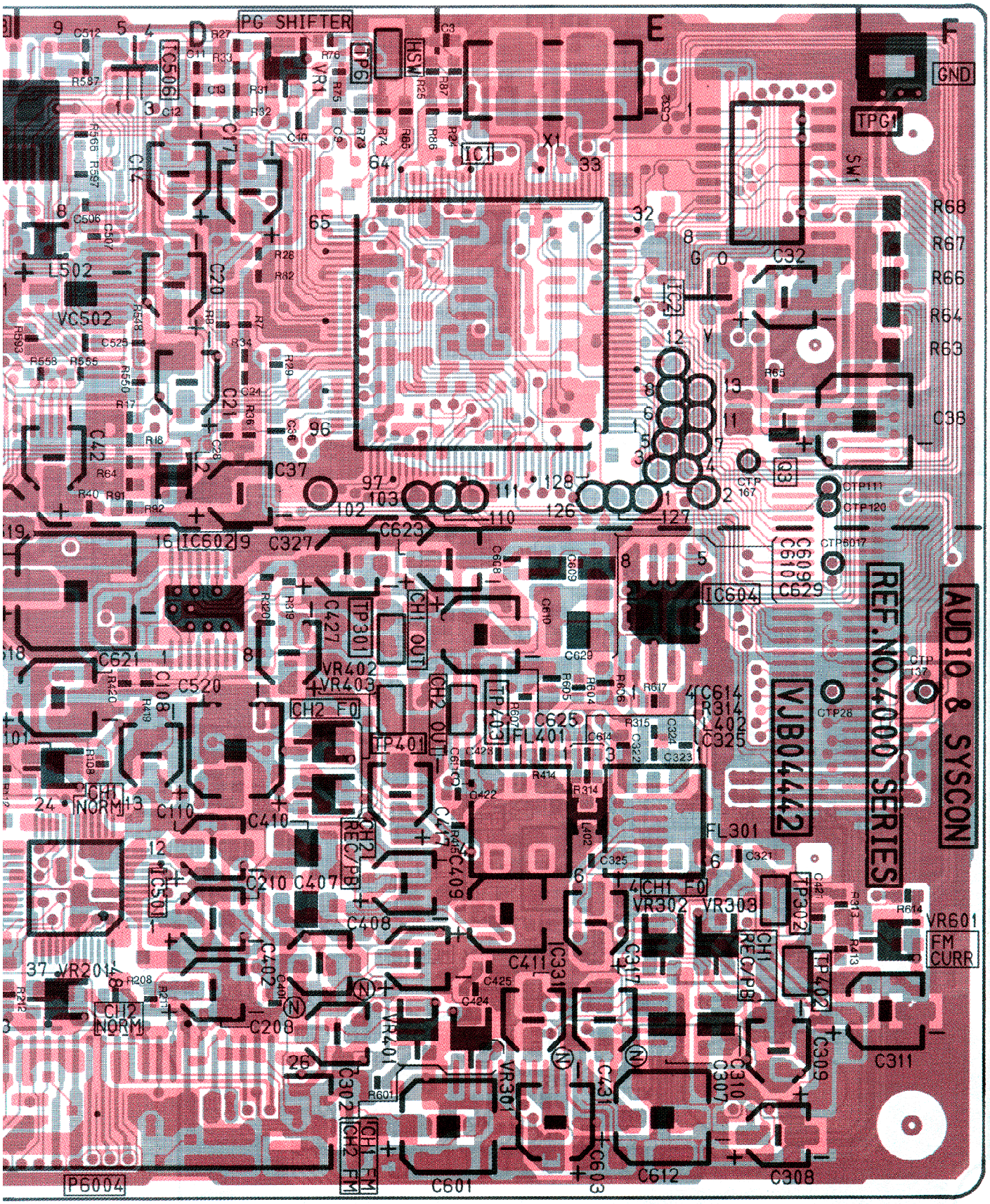

(COMPONENT SIDE)

LCD C.B.A.(E30)

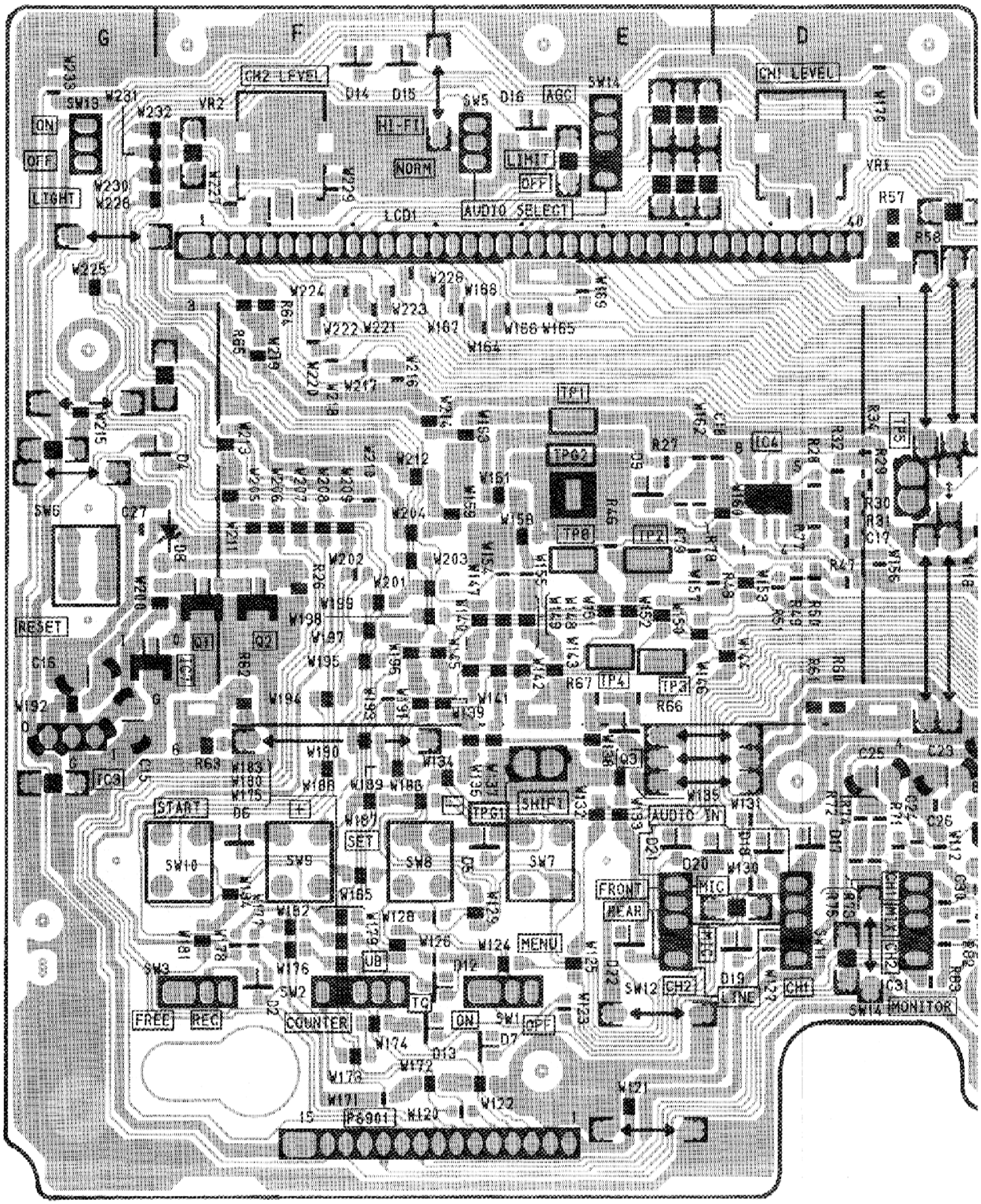
G
F
E
D
CH2 LEVEL
CH1 LEVEL
VR2
VR1
SW18
ON
OFF
LIGHT
HI-FI
NORM
SW5
D14
D15
D16
AGC
LIMIT
OFF
SW14
AUDIO SELECT
LCD1
40
R57
R58
W225
W226
W230
W231
W232
W228
W224
W223
W222
W221
W168
W167
W165
W164
W217
TP1
TP5
TP6
TP2
TP4
TP3
IC4
R27
R30
R31
C17
SW6
C27
D8
RESET
Q1
Q2
C16
FC1
FC2
W192
R63
W183
W188
W175
W190
W189
W186
W134
W135
W132
W133
W185
W131
W130
Q3
R67
R66
C25
C23
C26
C24
R72
R71
R70
R69
R68
C30
C31
R62
R63
SW14 MONITOR
CH1 MIX
CH2
CH1
CH2
SW12
D19
LINE
D20
MIC
FRONT
REAR
D21
AUDIO IN
SHIFT
TPG1
START
SET
SW10
SW9
SW8
SW7
D6
W187
W182
W128
W126
W124
MENU
W125
W123
W122
W121
W181
W178
W176
W177
W179
W174
W172
W171
W120
SW3
FREE
REC
SW2
COUNTER
TQ
UP
SW1
ON
OFF
D7
D13
P6901
15
1
W161
W158
W157
W156
W155
W154
W153
W152
W151
W150
W149
W148
W147
W146
W145
W144
W143
W142
W141
W139
W138
W137
W136
W127
W129
W169
W170
W173
W180
W191
W193
W194
W195
W196
W197
W198
W199
W200
W201
W202
W203
W204
W205
W206
W207
W208
W209
W210
W211
W212
W213
W214
W215
W216
W218
W219
W220
W163
W166
W162
W227
W229
W233
W234
R65
R64
R61
R60
R59
R54
R53
R52
R51
R50
R49
R48
R47
R46
R45
R44
R43
R42
R41
R40
R39
R38
R37
R36
R35
R34
R33
R32
R29
R28
R26
R25
R24
R23
R22
R21
R20
R19
R18
R17
R16
R15
R14
R13
R12
R11
R10
R9
R8
R7
R6
R5
R4
R3
R2
R1
C22
C21
C20
C19
C18
C15
C14
C13
C12
C11
C10
C9
C8
C7
C6
C5
C4
C3
C2
C1
D5
D4
D3
D2
D1
Q4
Q5
Q6
Q7
Q8
Q9
Q10
Q11
Q12
Q13
Q14
Q15
Q16
Q17
Q18
Q19
Q20
Q21
Q22
Q23
Q24
Q25
Q26
Q27
Q28
Q29
Q30
Q31
Q32
Q33
Q34
Q35
Q36
Q37
Q38
Q39
Q40
Q41
Q42
Q43
Q44
Q45
Q46
Q47
Q48
Q49
Q50
Q51
Q52
Q53
Q54
Q55
Q56
Q57
Q58
Q59
Q60
Q61
Q62
Q63
Q64
Q65
Q66
Q67
Q68
Q69
Q70
Q71
Q72
Q73
Q74
Q75
Q76
Q77
Q78
Q79
Q80
Q81
Q82
Q83
Q84
Q85
Q86
Q87
Q88
Q89
Q90
Q91
Q92
Q93
Q94
Q95
Q96
Q97
Q98
Q99
Q100

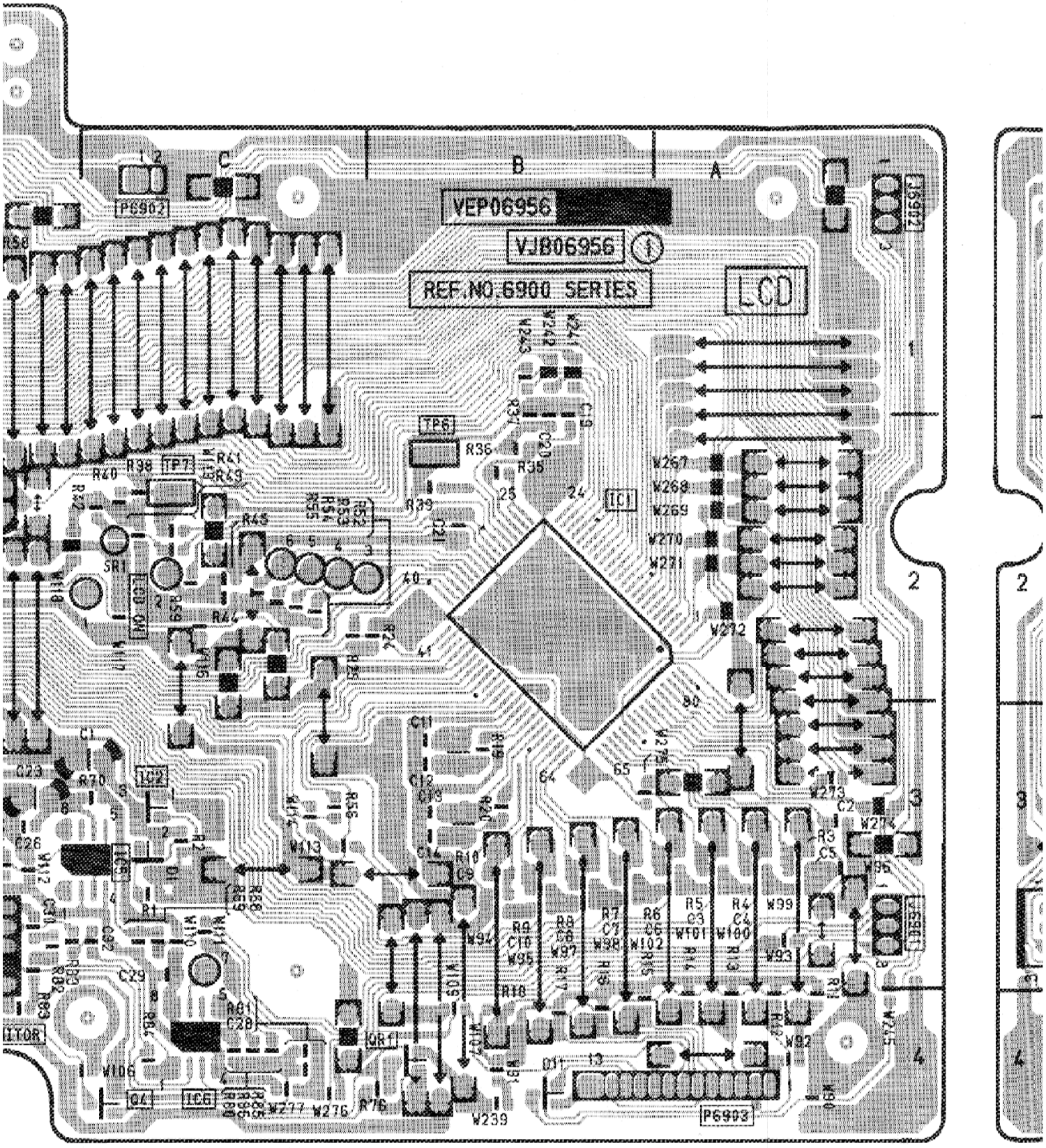
VEP06956
VJB06956
REF.NO.6900 SERIES
LCD
P6902
P6903
IC1
IC2
IC6
Q1
Q4
TP6
TP7
W267
W268
W269
W270
W271
W272
W273
W274
W276
W277
W239
W92
W93
W94
W95
W96
W97
W98
W99
W100
W101
W102
W107
W110
W111
W112
W113
W114
W115
W116
W117
W118
W119
W120
W121
W122
W123
W124
W125
W126
W127
W128
W129
W130
W131
W132
W133
W134
W135
W136
W137
W138
W139
W140
W141
W142
W143
W144
W145
W146
W147
W148
W149

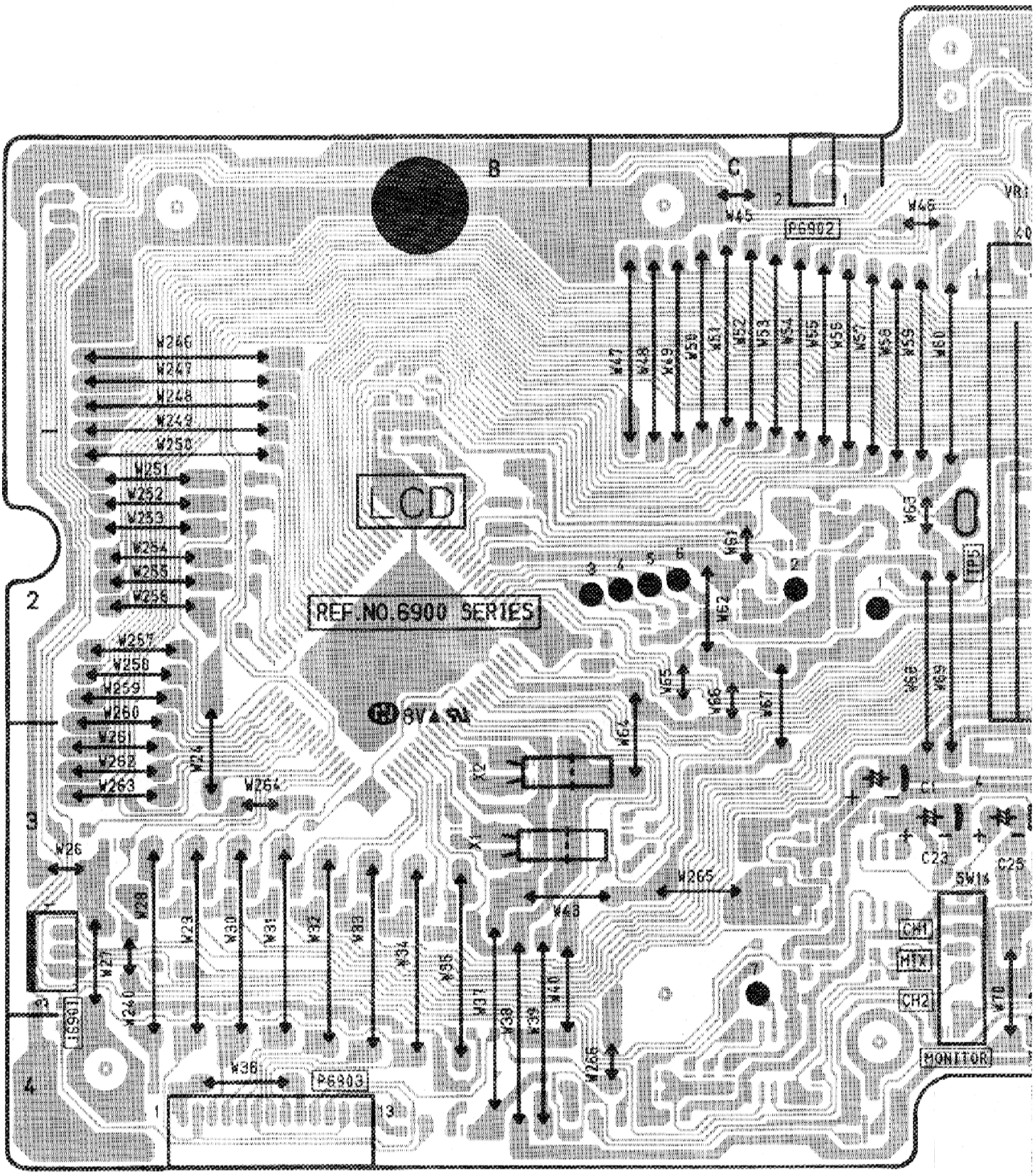

REF.NO.6900 SERIES
LCD
P6902
P6903
J6901
CH1
MIX
CH2
MONITOR
SW14
C23
C25
W45
W46
W47
W48
W49
W50
W51
W52
W53
W54
W55
W56
W57
W58
W59
W60
W61
W62
W63
W64
W65
W66
W67
W68
W69
W70
W246
W247
W248
W249
W250
W251
W252
W253
W254
W255
W256
W257
W258
W259
W260
W261
W262
W263
W264
W265
W266
W26
W27
W28
W29
W30
W31
W32
W33
W34
W35
W36
W37
W38
W39
W40
W43
W24
W23
W240

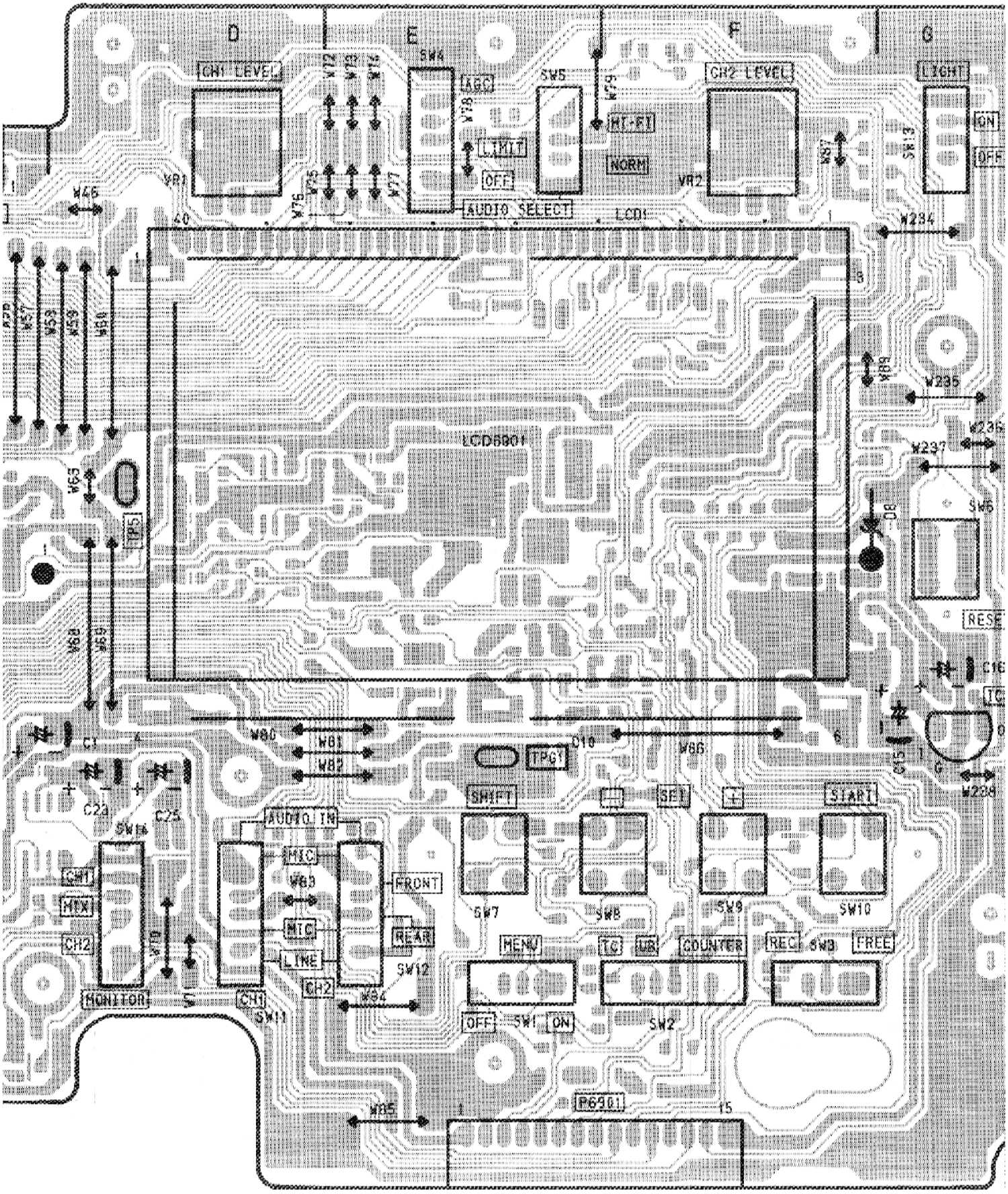

(COMPONENT SID

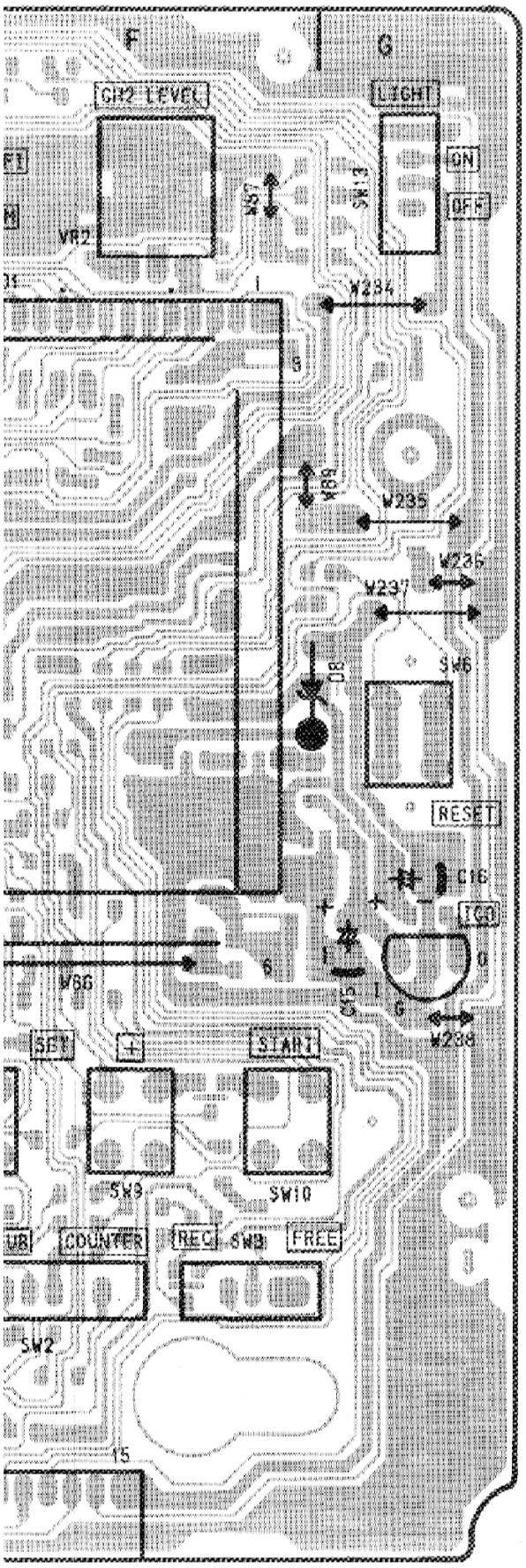

(COMPONENT SIDE)

LCD C.B.A.		
Transistor		
Q6901	F-2	Ⓓ
Q6902	F-2	Ⓓ
Q6903	E-3	Ⓕ
Q6904	C-4	Ⓕ
Transistor & Resistor		
QR6901	B-4	Ⓓ
Integrated Circuit		
IC6901	B-2	Ⓕ
IC6902	C-3	Ⓔ
IC6903	G-3	Ⓕ
IC6903	G-3	Ⓑ
IC6904	D-2	Ⓕ
IC6905	C-3	Ⓔ
IC6906	C-4	Ⓕ
Test Point		
TP6901	E-2	Ⓕ
TP6902	E-2	Ⓕ
TP6903	E-2	Ⓔ
TP6904	E-2	Ⓓ
TP6905	D-2	Ⓕ
TP6905	D-2	Ⓒ
TP6906	B-2	Ⓔ
TP6907	C-2	Ⓔ
TP6908	E-2	Ⓓ
TPG6901	E-3	Ⓓ
TPG6901	E-3	Ⓒ
TPG6902	E-2	Ⓕ
Adjustment		
VR6901	D-1	Ⓒ
VR6902	F-1	Ⓒ
Connector		
P6901	F-4	Ⓕ
P6901	F-4	Ⓒ
P6902	C-1	Ⓕ
P6902	C-1	Ⓒ
P6903	A-4	Ⓕ
P6903	A-4	Ⓒ

ADDRESS INFORMATION
Ⓓ...FOIL SIDE
Ⓒ...COMPONENT SIDE

POWER SW C.B.A.(E26)

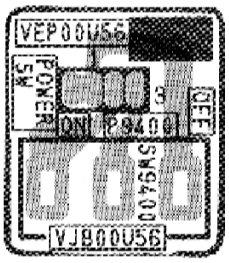

(FOIL SIDE)

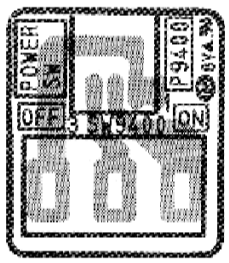

(COMPONENT SIDE)

MODE CHECK C.B.A.(E25)

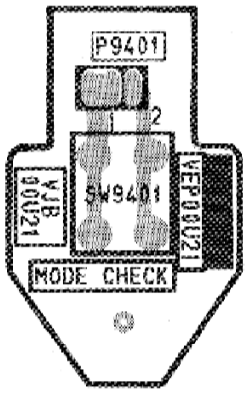

(FOIL SIDE)

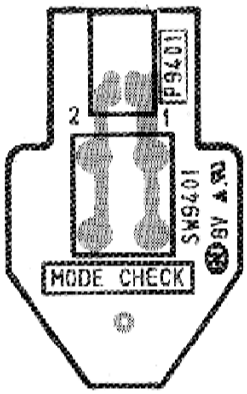

(COMPONENT SIDE)

SUPER IRIS C.B.A.(E27)

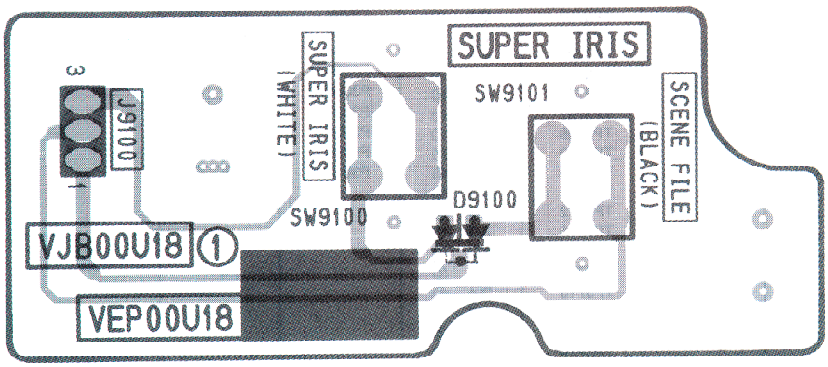

(FOIL SIDE)

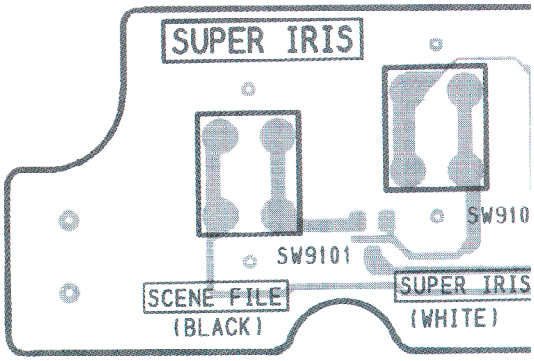

POWER C.B.A.(E10)

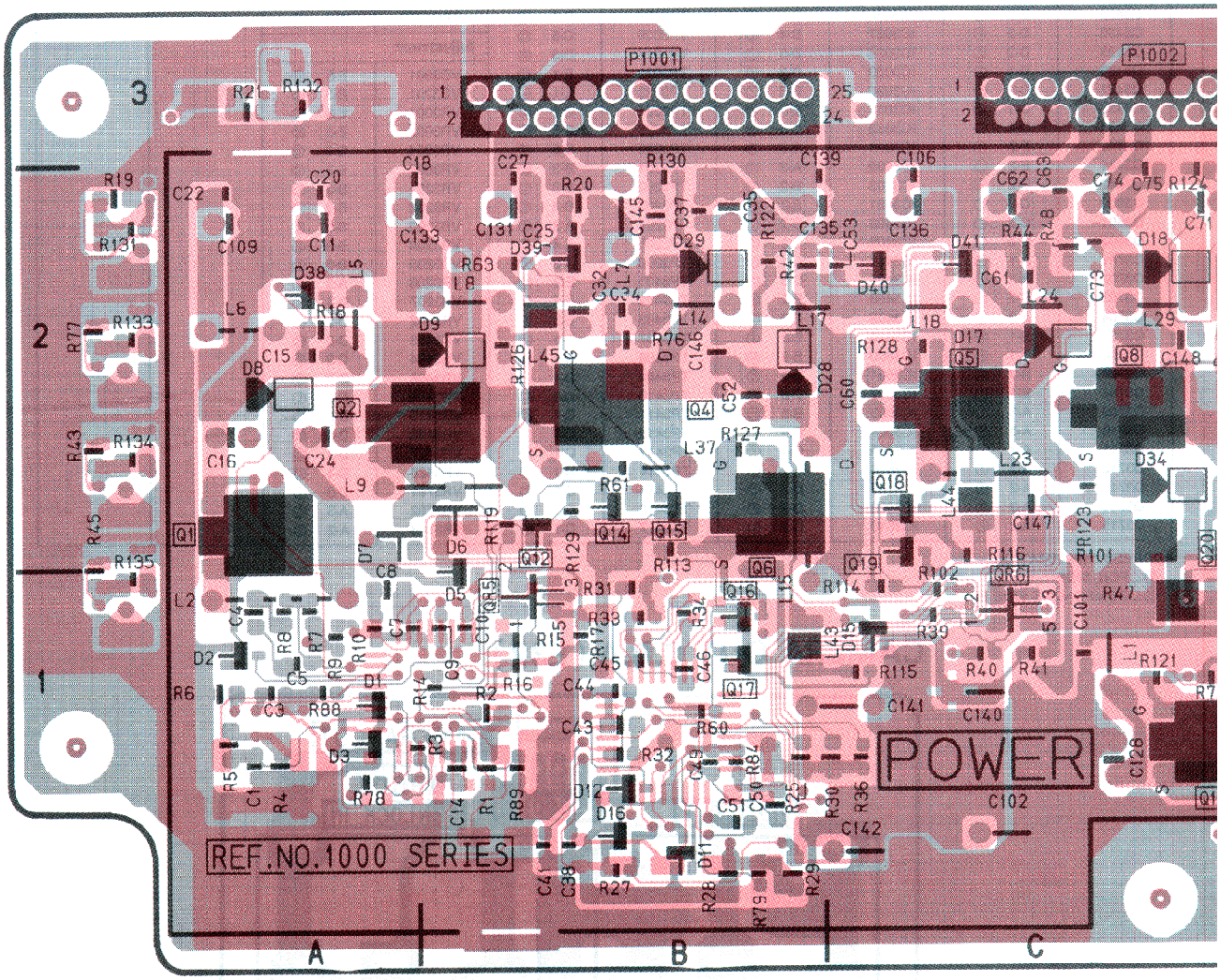

MONITOR VR C.B.A.(E28)

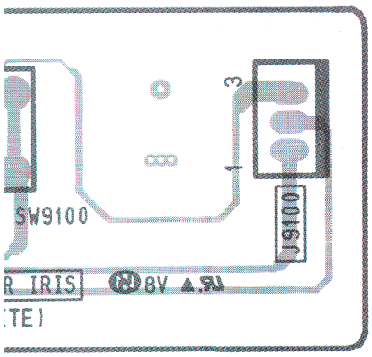

(COMPONENT SIDE)

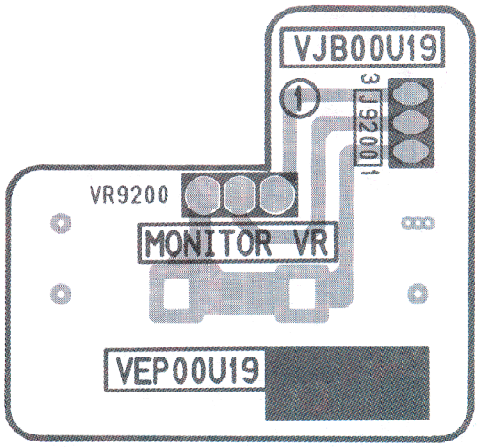

(FOIL SIDE)

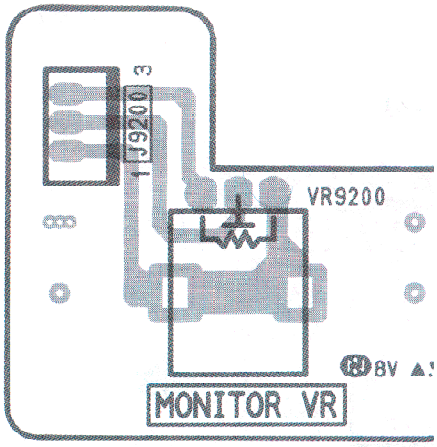

(COMPONENT SID

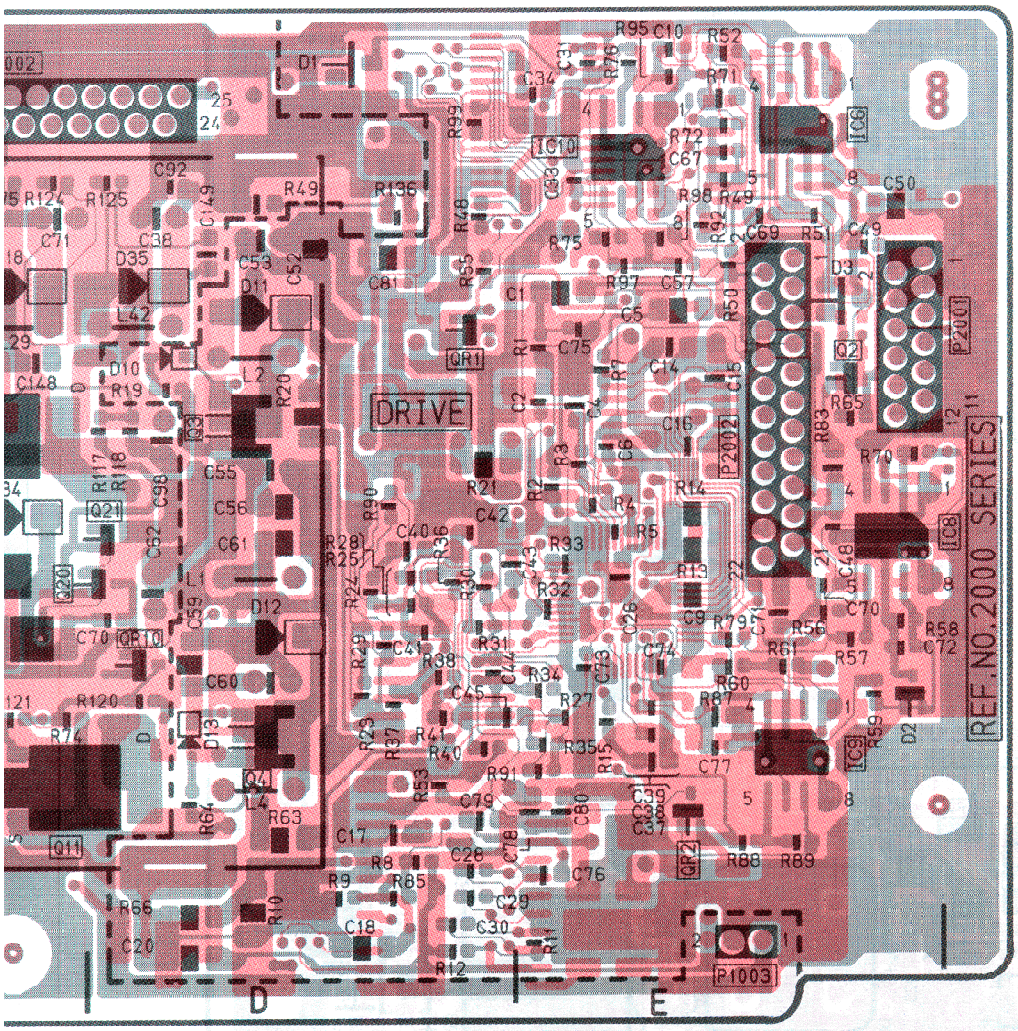

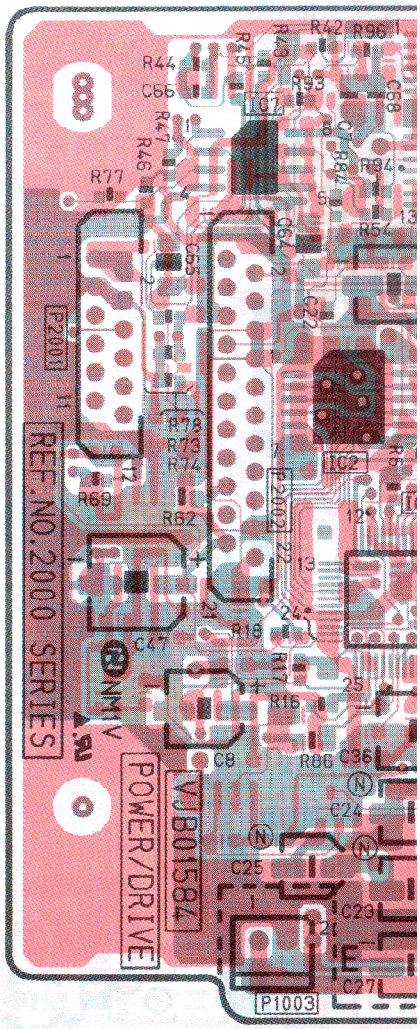

(FOIL SIDE)

TOGGLE SW C.B.A.(E29)

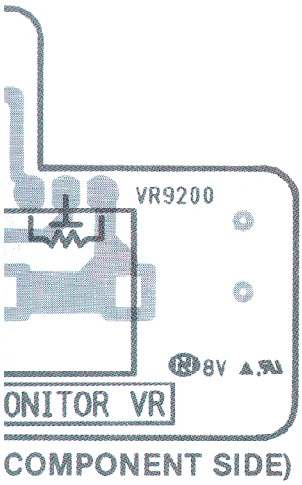

COMPONENT SIDE)

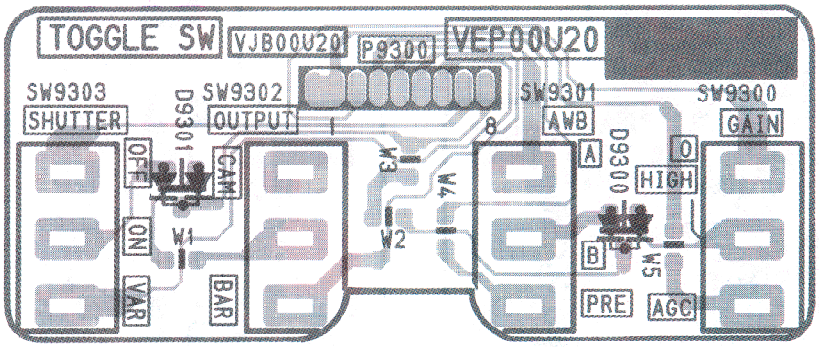

(FOIL SIDE)

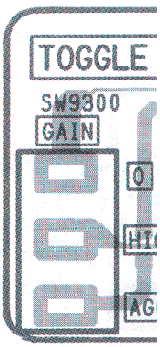

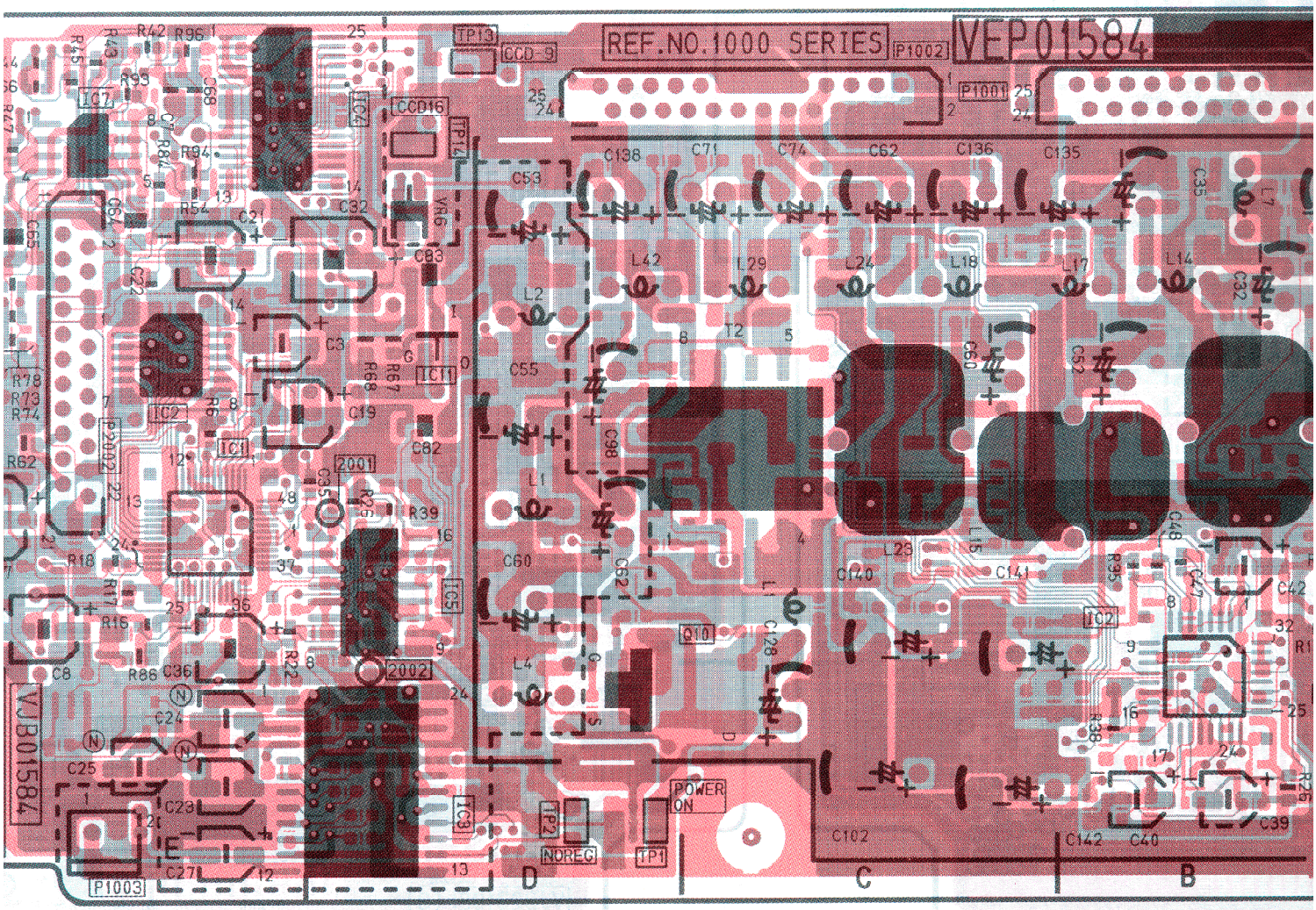

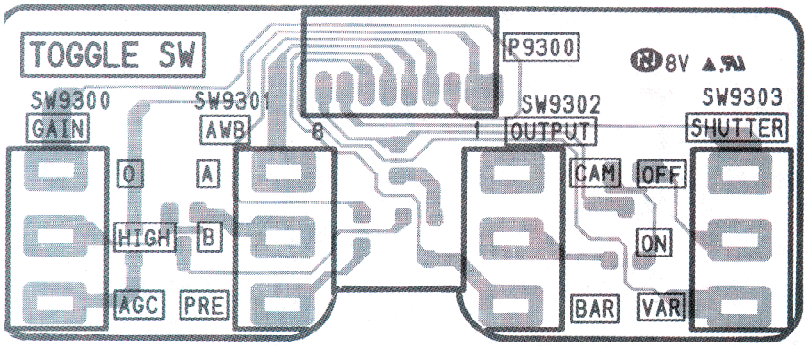

(COMPONENT SIDE)

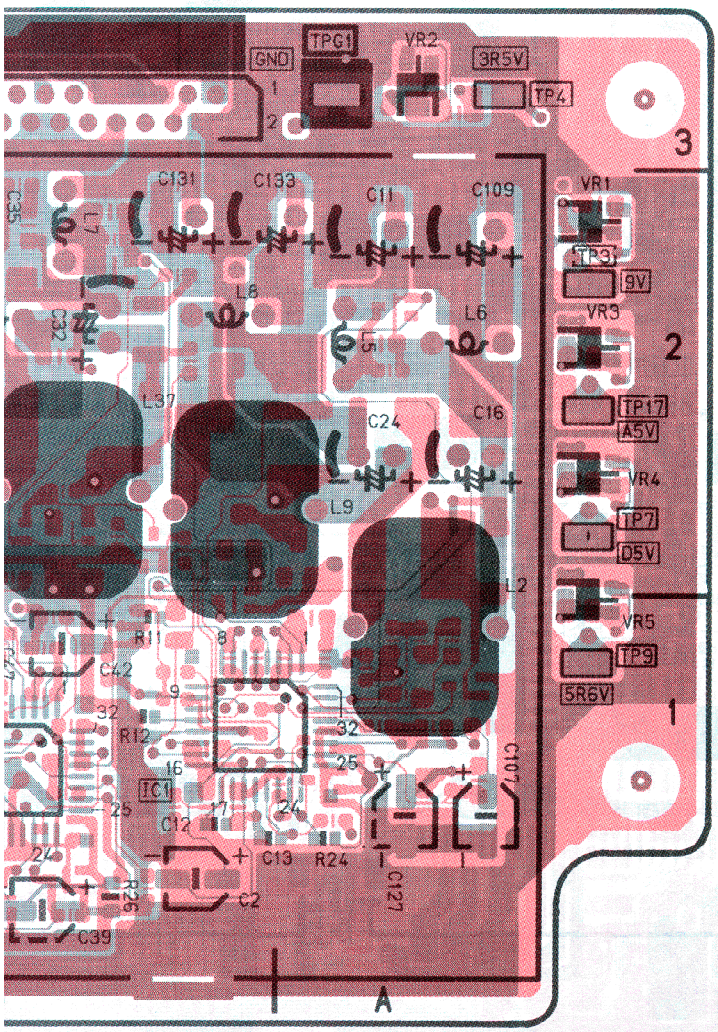

(COMPONENT SIDE)

POWER C.B.A.		
Transistor		
Q1001	A-2	Ⓕ
Q1002	B-2	Ⓕ
Q1004	D-1	Ⓕ
Q1005	C-2	Ⓕ
Q1006	B-2	Ⓕ
Q1008	C-2	Ⓕ
Q1010	D-1	Ⓒ
Q1011	C-1	Ⓕ
Q1012	B-2	Ⓕ
Q1014	B-2	Ⓕ
Q1015	B-2	Ⓕ
Q1016	B-1	Ⓕ
Q1017	B-1	Ⓕ
Q1018	C-2	Ⓕ
Q1019	C-2	Ⓕ
Q1020	C-2	Ⓕ
Q1021	D-2	Ⓕ
Q2002	E-2	Ⓕ
Q2003	D-2	Ⓕ
Q2004	D-1	Ⓕ
Transistor & Resistor		
QR1005	B-1	Ⓕ
QR1006	C-1	Ⓕ
QR1010	D-1	Ⓕ
QR2001	D-2	Ⓕ
QR2002	E-1	Ⓕ
Integrated Circuit		
IC1001	B-1	Ⓒ
IC1002	B-1	Ⓒ
IC2001	D-2	Ⓒ
IC2002	D-2	Ⓒ
IC2003	D-1	Ⓒ
IC2004	D-3	Ⓒ
IC2005	D-1	Ⓒ
IC2006	E-3	Ⓕ
IC2007	D-3	Ⓒ
IC2008	E-2	Ⓕ
IC2009	E-1	Ⓕ
IC2010	E-3	Ⓕ
Test Point		
TP1001	D-1	Ⓒ
TP1002	D-1	Ⓒ
TP1003	A-2	Ⓒ
TP1004	A-3	Ⓒ
TP1007	A-2	Ⓒ
TP1009	A-1	Ⓒ
TP1013	D-3	Ⓒ
TP1014	D-3	Ⓒ
TP1017	A-2	Ⓒ
TPG1001	A-3	Ⓒ
Adjustment		
VR1001	A-2	Ⓒ
VR1002	A-3	Ⓕ
VR1003	A-2	Ⓒ
VR1004	A-2	Ⓒ
VR1005	A-1	Ⓒ
VR1006	D-2	Ⓒ
Connector		
P1001	B-3	Ⓕ
P1001	B-3	Ⓒ
P1002	C-3	Ⓕ
P1002	C-3	Ⓒ
P1003	E-1	Ⓕ
P1003	D-1	Ⓒ
P2001	E-2	Ⓕ
P2001	D-2	Ⓒ
P2002	E-2	Ⓕ
P2002	D-2	Ⓒ

ADDRESS INFORMATION
Ⓕ...FOIL SIDE
Ⓒ...COMPONENT SIDE

PROCESS C.B.A.(E15)

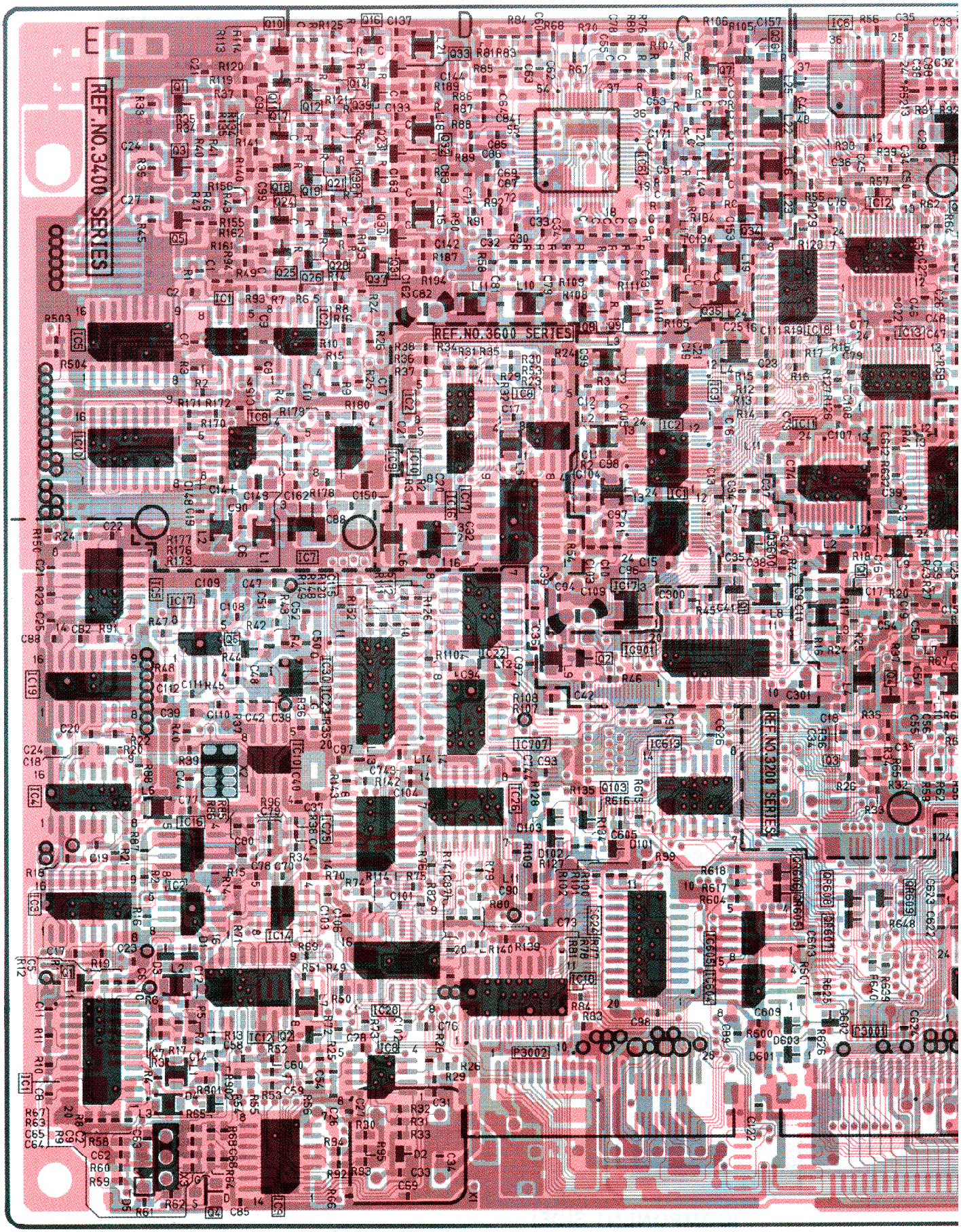

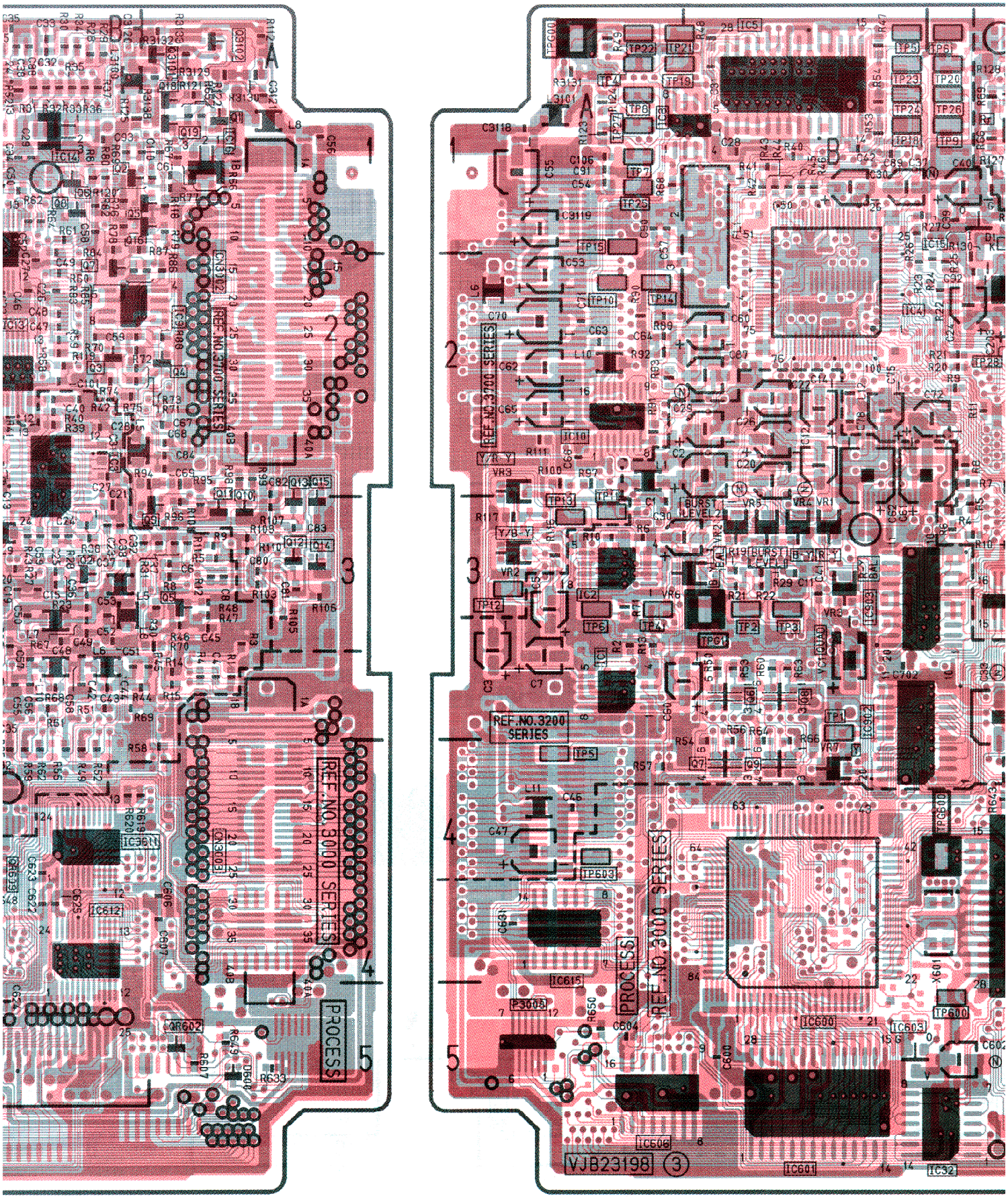

(FOIL SIDE)

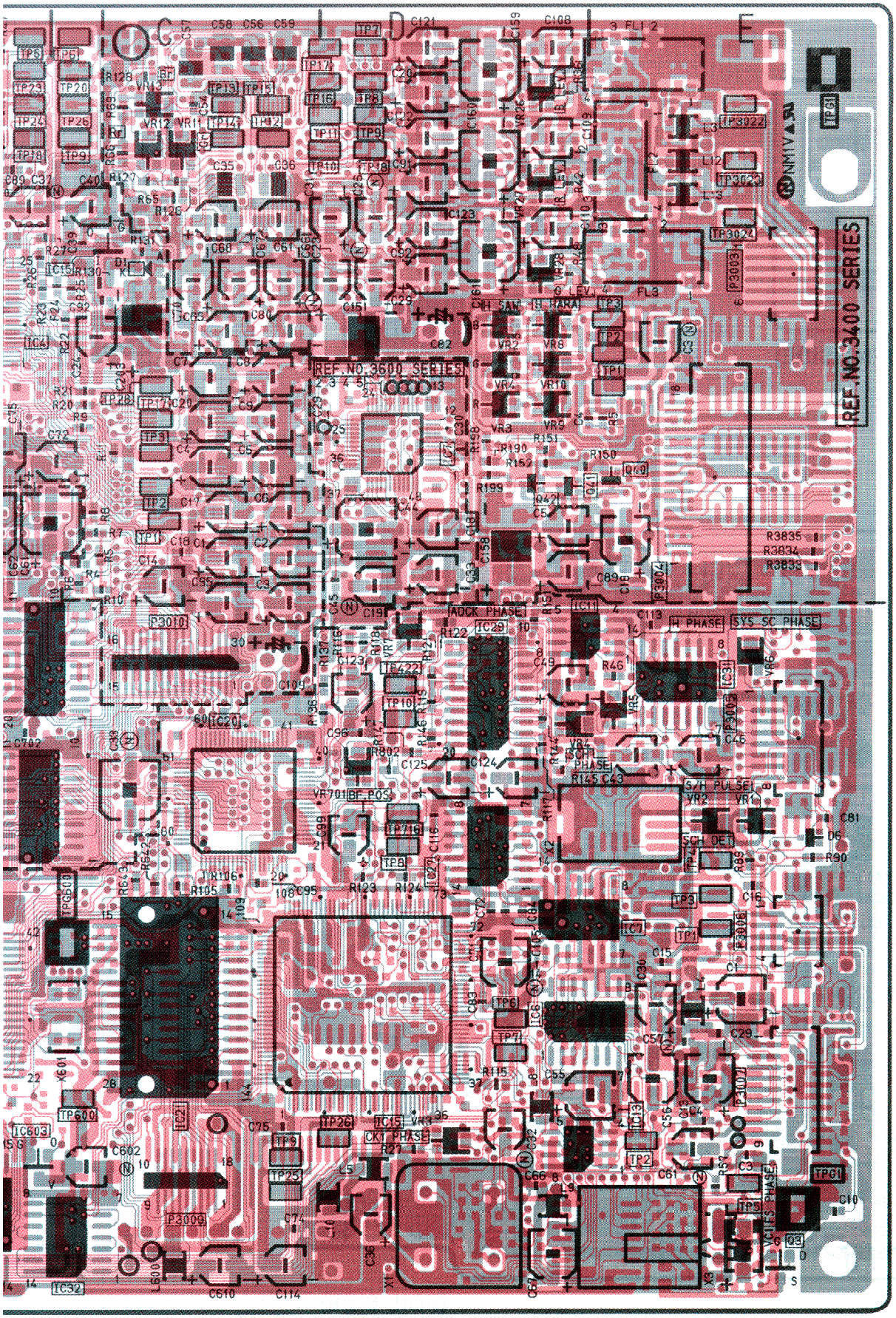

(COMPONENT SIDE)

Transistor
Q3001
Q3002
Q3003
Q3004
Q3005
Q3101
Q3102
Q3103
Q3201
Q3202
Q3203
Q3204
Q3205
Q3206
Q3207
Q3208
Q3209
Q3401
Q3403
Q3405
Q3407
Q3408
Q3409
Q3410
Q3411
Q3412
Q3414
Q3416
Q3417
Q3418
Q3419
Q3421
Q3423
Q3424
Q3425
Q3426
Q3428
Q3430
Q3431
Q3432
Q3433
Q3440
Q3441
Q3442
Q3600
Q3601
Q3602
Q3701
Q3702
Q3703
Q3704
Q3705
Q3706
Q3707
Q3708
Q3709
Q3710
Q3711
Q3712
Q3713
Q3714
Q3715

ADDRESS INFO
Ⓕ... FOIL SID
Ⓒ... COMPON

PROCESS C.B.A.

Transistor

Q3001	E-4	Ⓕ
Q3002	E-5	Ⓕ
Q3003	E-5	Ⓒ
Q3004	E-5	Ⓕ
Q3005	E-3	Ⓕ
Q3101	A-1	Ⓕ
Q3102	A-1	Ⓕ
Q3103	C-4	Ⓕ
Q3201	B-3	Ⓕ
Q3202	B-3	Ⓕ
Q3203	B-4	Ⓕ
Q3204	B-3	Ⓕ
Q3205	A-3	Ⓕ
Q3206	B-3	Ⓒ
Q3207	B-4	Ⓒ
Q3208	B-3	Ⓒ
Q3209	B-4	Ⓒ
Q3401	E-1	Ⓕ
Q3403	E-1	Ⓕ
Q3405	E-1	Ⓕ
Q3407	C-1	Ⓕ
Q3408	C-2	Ⓕ
Q3409	C-2	Ⓕ
Q3410	E-1	Ⓕ
Q3411	E-1	Ⓕ
Q3412	D-1	Ⓕ
Q3414	D-1	Ⓕ
Q3416	D-1	Ⓕ
Q3417	E-1	Ⓕ
Q3418	E-1	Ⓕ
Q3419	D-1	Ⓕ
Q3421	D-1	Ⓕ
Q3423	D-1	Ⓕ
Q3424	E-1	Ⓕ
Q3425	E-2	Ⓕ
Q3426	D-2	Ⓕ
Q3428	D-2	Ⓕ
Q3430	D-1	Ⓕ
Q3431	D-2	Ⓒ
Q3432	D-1	Ⓒ
Q3433	D-1	Ⓒ
Q3440	E-2	Ⓒ
Q3441	E-2	Ⓒ
Q3442	D-2	Ⓒ
Q3600	C-3	Ⓕ
Q3601	C-3	Ⓕ
Q3602	C-3	Ⓕ
Q3701	A-1	Ⓕ
Q3702	B-1	Ⓕ
Q3703	B-2	Ⓕ
Q3704	A-2	Ⓕ
Q3705	B-1	Ⓕ
Q3706	B-1	Ⓕ
Q3707	B-2	Ⓕ
Q3708	B-1	Ⓕ
Q3709	A-3	Ⓕ
Q3710	A-3	Ⓕ
Q3711	A-3	Ⓕ
Q3712	A-3	Ⓕ
Q3713	A-2	Ⓕ
Q3714	A-3	Ⓕ
Q3715	A-2	Ⓕ
Q3716	B-1	Ⓕ
Q3718	A-1	Ⓕ
Q3719	A-1	Ⓕ

Transistor & Resistor

QR3602	A-5	Ⓕ
QR3605	B-4	Ⓕ
QR3606	B-4	Ⓕ
QR3609	B-4	Ⓕ

Integrated Circuit

IC3001	E-5	Ⓕ
IC3002	E-4	Ⓕ
IC3003	E-4	Ⓕ
IC3004	E-4	Ⓕ
IC3005	E-3	Ⓕ
IC3006	D-4	Ⓒ
IC3007	E-4	Ⓒ
IC3008	D-5	Ⓕ
IC3009	E-5	Ⓕ
IC3010	D-4	Ⓕ
IC3011	D-3	Ⓒ
IC3012	E-5	Ⓕ
IC3013	E-5	Ⓒ
IC3014	E-4	Ⓕ
IC3015	D-5	Ⓒ
IC3016	E-4	Ⓕ
IC3017	E-3	Ⓕ
IC3018	C-4	Ⓕ
IC3019	E-3	Ⓕ
IC3020	C-3	Ⓒ
IC3022	D-3	Ⓕ
IC3023	D-3	Ⓕ
IC3024	C-4	Ⓕ
IC3025	D-4	Ⓕ
IC3026	D-4	Ⓕ
IC3027	D-4	Ⓒ
IC3028	D-5	Ⓕ
IC3029	D-3	Ⓒ
IC3030	D-3	Ⓕ
IC3031	E-3	Ⓒ
IC3032	C-5	Ⓒ
IC3201	A-3	Ⓒ
IC3202	A-3	Ⓒ
IC3203	B-2	Ⓕ
IC3401	E-2	Ⓕ
IC3402	D-2	Ⓕ
IC3405	E-2	Ⓕ
IC3406	C-1	Ⓕ
IC3407	D-3	Ⓕ
IC3408	E-2	Ⓕ
IC3409	D-2	Ⓕ
IC3410	E-2	Ⓕ
IC3600	B-5	Ⓒ
IC3601	B-5	Ⓒ
IC3602	D-2	Ⓕ
IC3603	B-5	Ⓒ
IC3604	C-4	Ⓕ
IC3605	C-4	Ⓕ
IC3606	A-5	Ⓒ
IC3607	D-2	Ⓒ
IC3608	D-2	Ⓕ
IC3610	D-2	Ⓕ
IC3611	A-4	Ⓕ
IC3612	B-4	Ⓕ
IC3613	C-3	Ⓒ
IC3615	A-4	Ⓒ
IC3616	D-2	Ⓕ
IC3617	D-2	Ⓕ
IC3701	C-2	Ⓕ
IC3702	C-2	Ⓕ
IC3703	C-2	Ⓕ
IC3704	B-2	Ⓒ
IC3705	B-1	Ⓒ
IC3706	B-1	Ⓕ
IC3707	D-3	Ⓕ
IC3708	A-1	Ⓒ
IC3709	A-2	Ⓕ
IC3710	A-2	Ⓒ
IC3711	B-2	Ⓕ
IC3712	B-1	Ⓕ
IC3713	B-2	Ⓕ
IC3714	B-1	Ⓕ
IC3715	C-1	Ⓒ
IC3716	A-1	Ⓕ
IC3717	C-3	Ⓕ
IC3901	C-3	Ⓕ
IC3902	B-3	Ⓒ
IC3903	B-3	Ⓒ

Test Point

TP3001	E-4	Ⓒ
TP3002	E-5	Ⓒ
TP3003	E-4	Ⓒ
TP3004	E-4	Ⓒ
TP3005	E-5	Ⓒ
TP3006	D-4	Ⓒ
TP3007	D-4	Ⓒ
TP3008	D-4	Ⓒ
TP3009	C-5	Ⓒ
TP3010	D-3	Ⓒ
TP3022	E-1	Ⓒ
TP3023	E-1	Ⓒ
TP3024	E-1	Ⓒ
TP3025	C-5	Ⓒ
TP3026	D-5	Ⓒ
TP3201	B-3	Ⓒ
TP3202	B-3	Ⓒ
TP3203	B-3	Ⓒ
TP3204	A-3	Ⓒ
TP3205	A-4	Ⓒ
TP3206	A-3	Ⓒ
TP3401	E-2	Ⓒ
TP3402	E-2	Ⓒ
TP3403	E-2	Ⓒ
TP3407	D-1	Ⓒ
TP3408	D-1	Ⓒ
TP3409	D-1	Ⓒ
TP3410	C-1	Ⓒ
TP3411	C-1	Ⓒ
TP3412	C-1	Ⓒ
TP3413	C-1	Ⓒ
TP3414	C-1	Ⓒ
TP3415	C-1	Ⓒ
TP3416	C-1	Ⓒ
TP3417	C-1	Ⓒ
TP3418	D-1	Ⓒ
TP3422	D-3	Ⓒ
TP3600	C-5	Ⓒ
TP3603	A-4	Ⓒ
TP3701	C-2	Ⓒ
TP3702	C-2	Ⓒ
TP3703	C-2	Ⓒ
TP3704	A-1	Ⓒ
TP3705	B-1	Ⓒ
TP3706	C-1	Ⓒ
TP3707	A-1	Ⓒ
TP3708	A-1	Ⓒ
TP3709	C-1	Ⓒ
TP3710	A-2	Ⓒ
TP3711	A-3	Ⓒ
TP3712	A-3	Ⓒ
TP3713	A-3	Ⓒ
TP3714	A-2	Ⓒ
TP3715	A-1	Ⓒ
TP3716	D-4	Ⓒ
TP3717	C-2	Ⓒ
TP3718	B-1	Ⓒ
TP3719	A-1	Ⓒ
TP3720	C-1	Ⓒ
TP3721	A-1	Ⓒ
TP3722	A-1	Ⓒ
TP3723	B-1	Ⓒ
TP3724	B-1	Ⓒ
TP3725	A-1	Ⓒ
TP3726	C-1	Ⓒ
TP3727	A-1	Ⓒ
TP3728	C-2	Ⓒ
TPG3001	E-5	Ⓒ
TPG3201	B-3	Ⓒ
TPG3401	E-1	Ⓒ
TPG3600	C-4	Ⓒ
TPG3700	A-1	Ⓒ

Adjustment

VC3001	F-5	Ⓒ
VC3201	B-3	Ⓒ
VR3001	E-3	Ⓒ
VR3002	E-3	Ⓒ
VR3004	D-3	Ⓒ
VR3005	E-3	Ⓒ
VR3201	B-3	Ⓒ
VR3202	B-3	Ⓒ
VR3203	B-3	Ⓒ
VR3204	B-3	Ⓒ
VR3205	B-3	Ⓒ
VR3206	A-3	Ⓒ
VR3207	B-4	Ⓒ
VR3402	D-2	Ⓒ
VR3403	D-2	Ⓒ
VR3404	D-2	Ⓒ
VR3408	D-2	Ⓒ
VR3409	D-2	Ⓒ
VR3410	D-2	Ⓒ
VR3426	D-1	Ⓒ
VR3427	D-1	Ⓒ
VR3428	D-1	Ⓒ
VR3701	D-3	Ⓒ
VR3702	A-3	Ⓒ
VR3703	A-2	Ⓒ

Connector

CN3002	A-2	Ⓕ
CN3003	A-4	Ⓕ
P3001	B-5	Ⓕ
P3002	D-5	Ⓕ
P3003	E-1	Ⓒ
P3004	E-3	Ⓒ
P3005	E-3	Ⓒ
P3006	E-4	Ⓒ
P3007	E-4	Ⓒ
P3008	A-5	Ⓒ
P3009	C-5	Ⓒ
P3010	C-3	Ⓒ

ADDRESS INFORMATION
Ⓕ... FOIL SIDE
Ⓒ... COMPONENT SIDE

CAMERA OUT C.B.A.(E32)

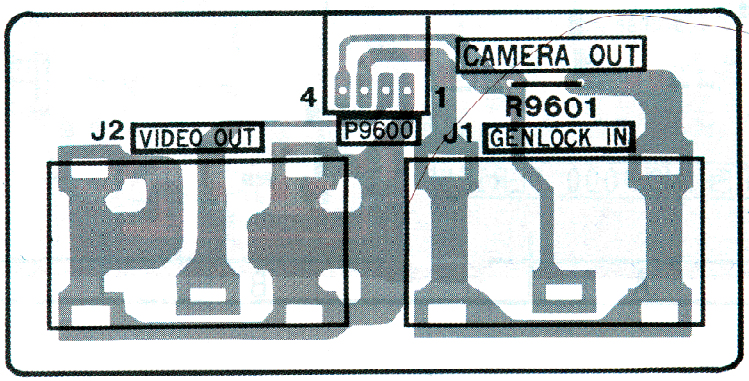

H DEF C.B.A.(E1)

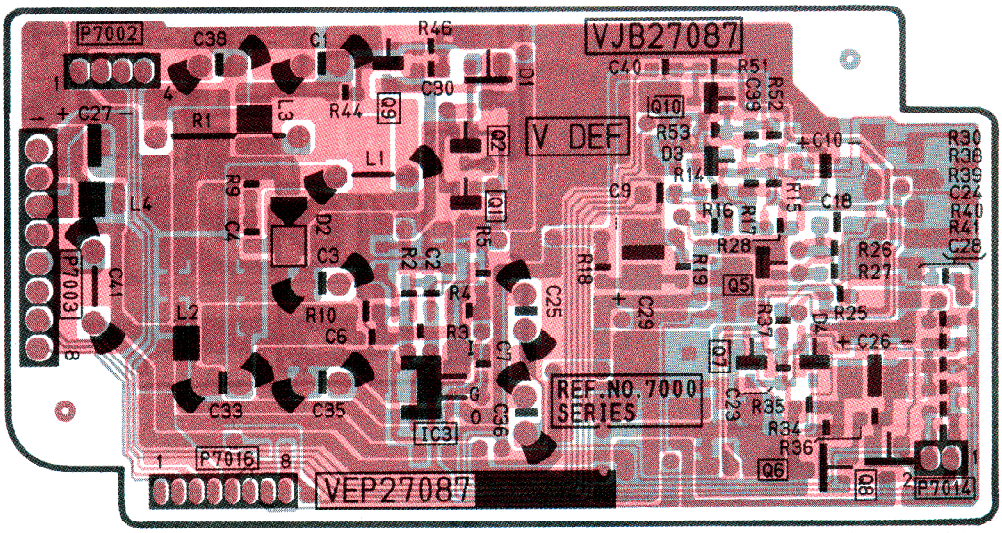

(FOIL SIDE)

V DEF C.B.A.(E2)

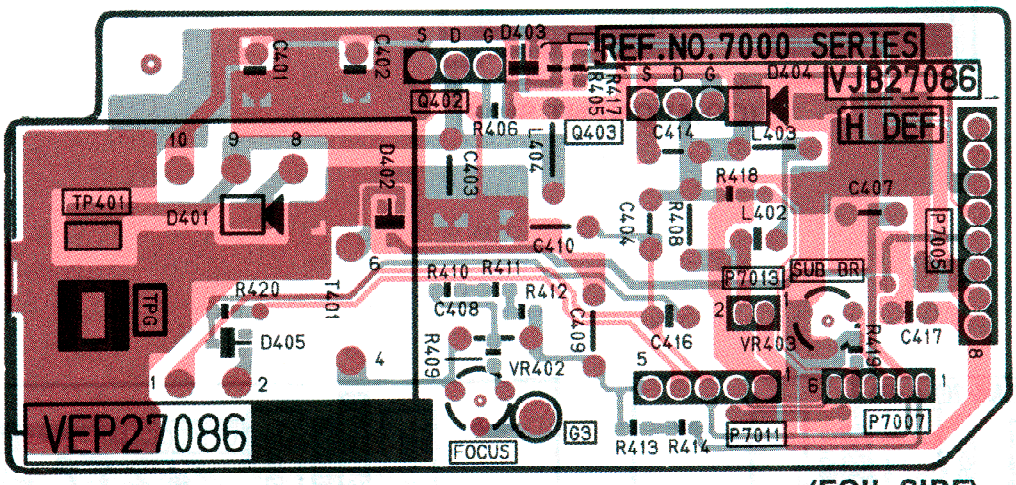

(FOIL SIDE)

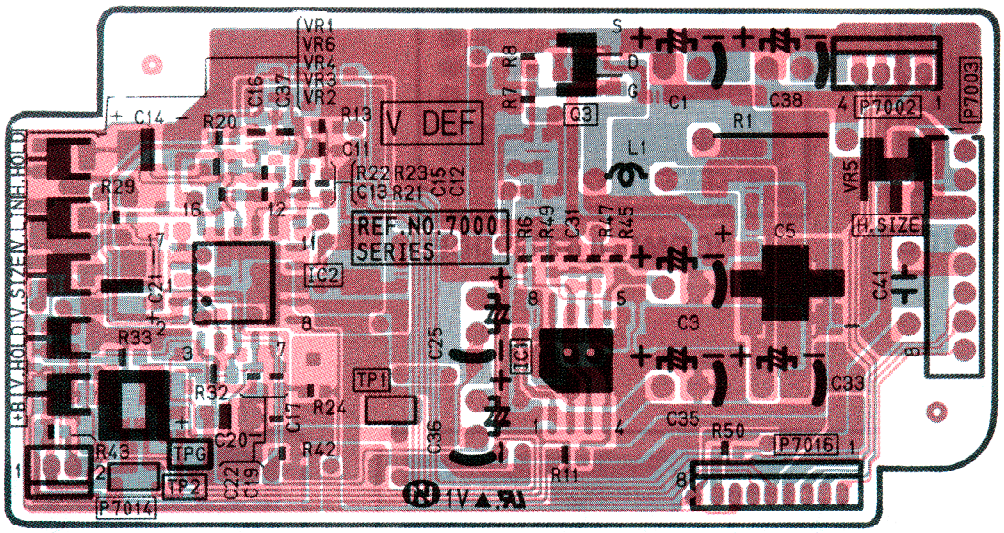

(COMPONENT SIDE)

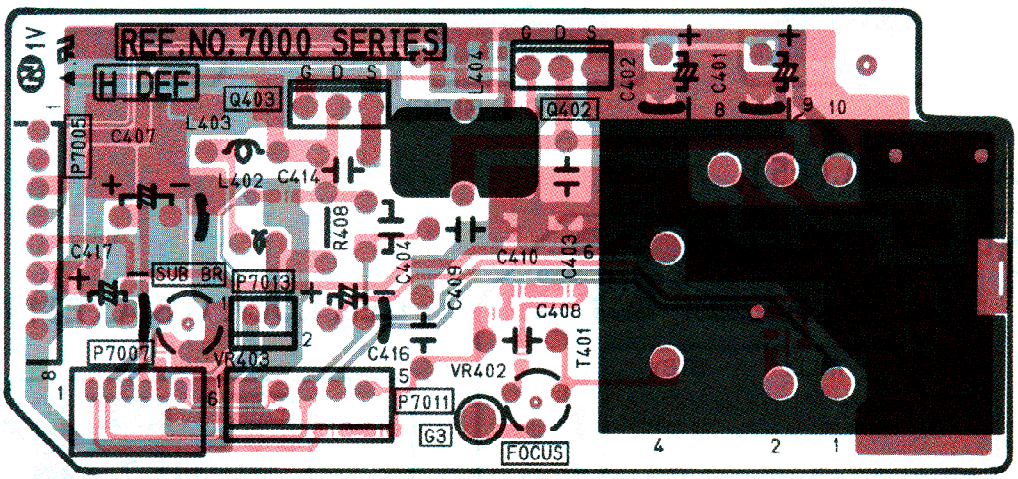

(COMPONENT SIDE)

CN C.B.A.(E3)

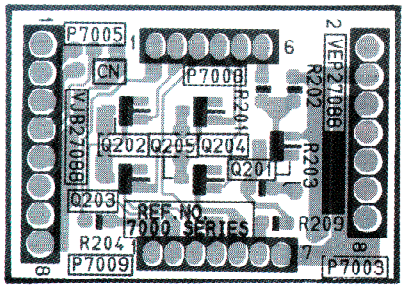

(FOIL SIDE)

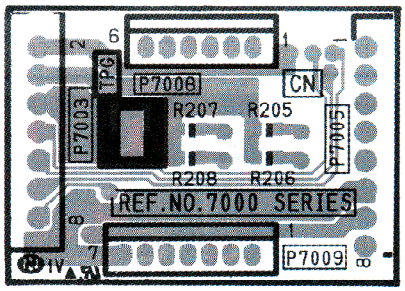

(COMPONENT SIDE)

FRONT C.B.A.(E4)

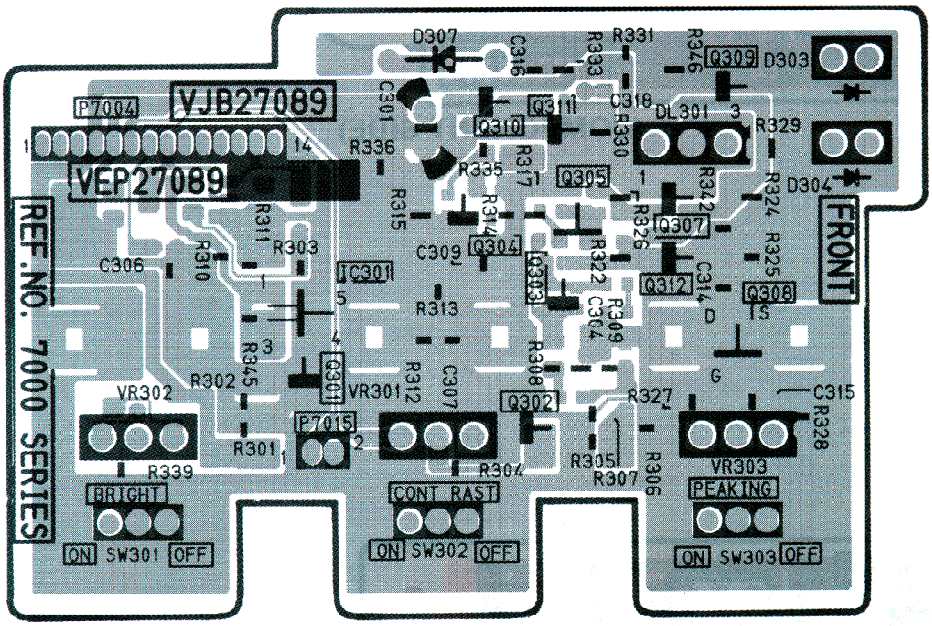

(FOIL SIDE)

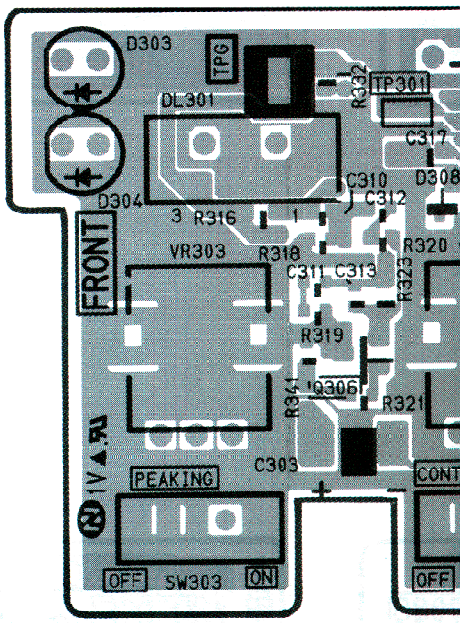

CRT MASK C.B.A.(E5)

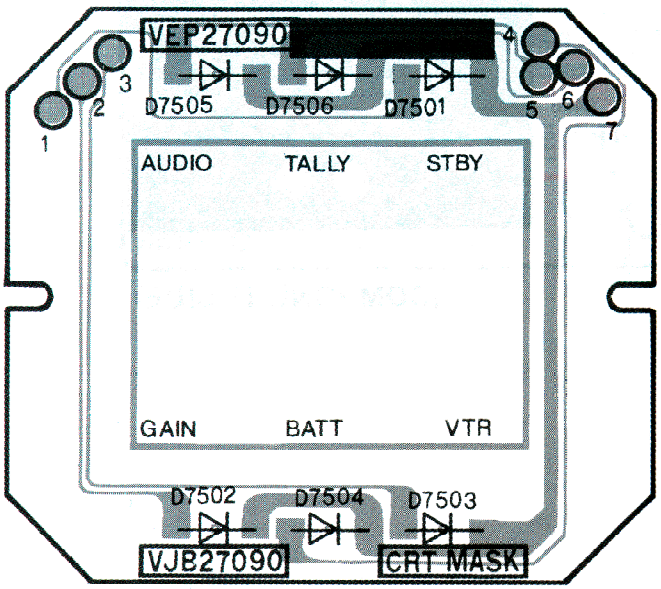

GEN LOCK C.B.A.(E31)

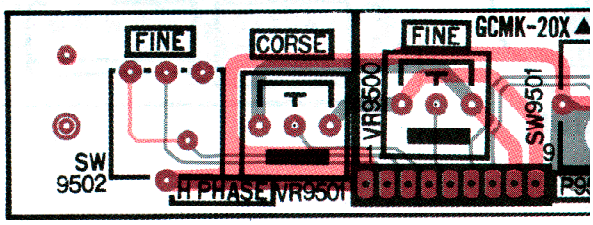

AV OUT C.B.A.(E8)

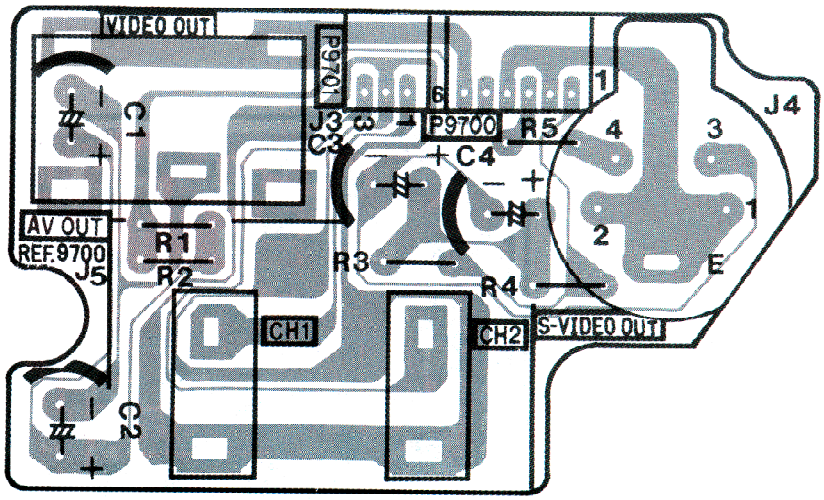

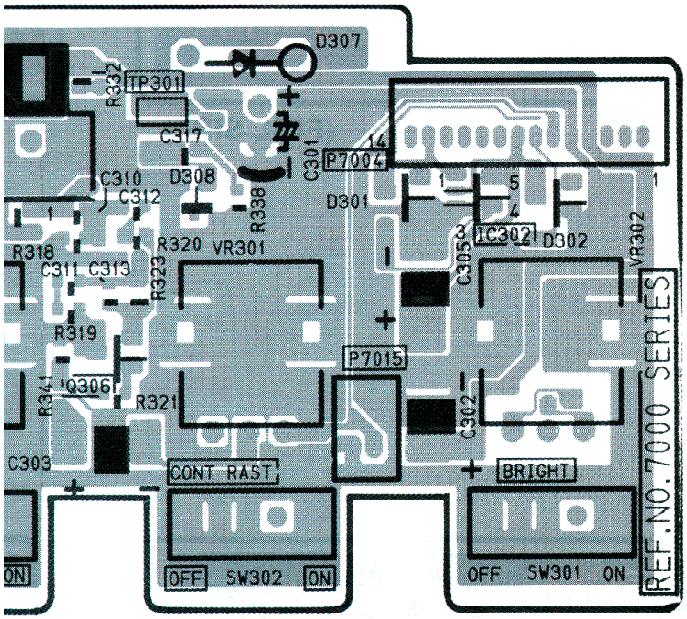

(COMPONENT SIDE)

1)

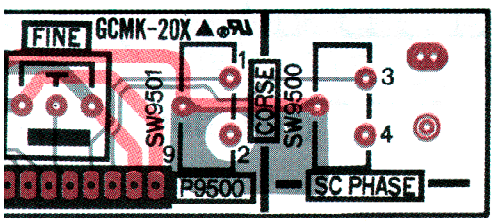

(FOIL SIDE)

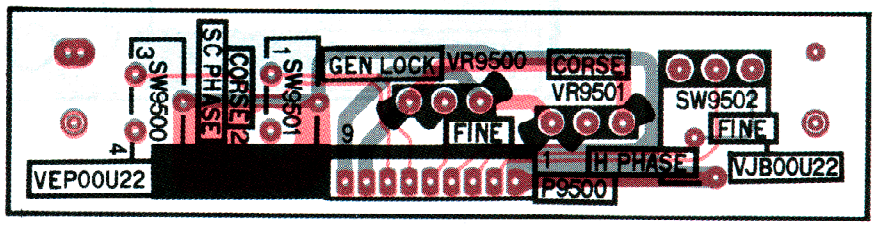

(COMPONENT SIDE)

OPERATION C.B.A.(E24)

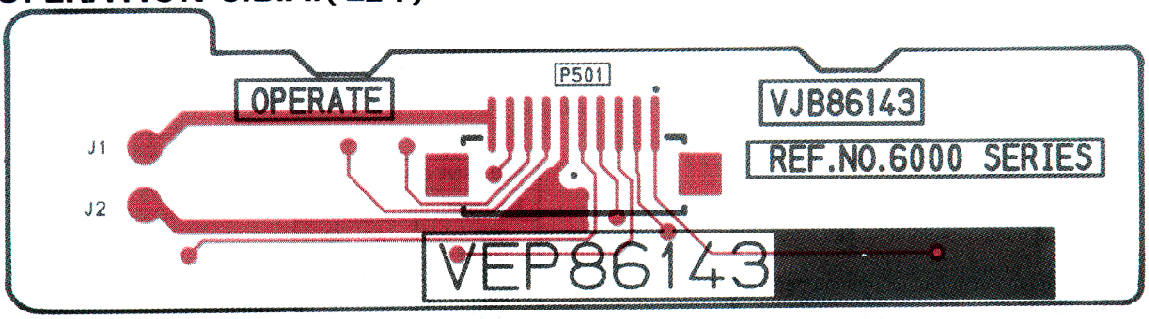

(FOIL SIDE)

CCD PULSE C.B.A.(E19)

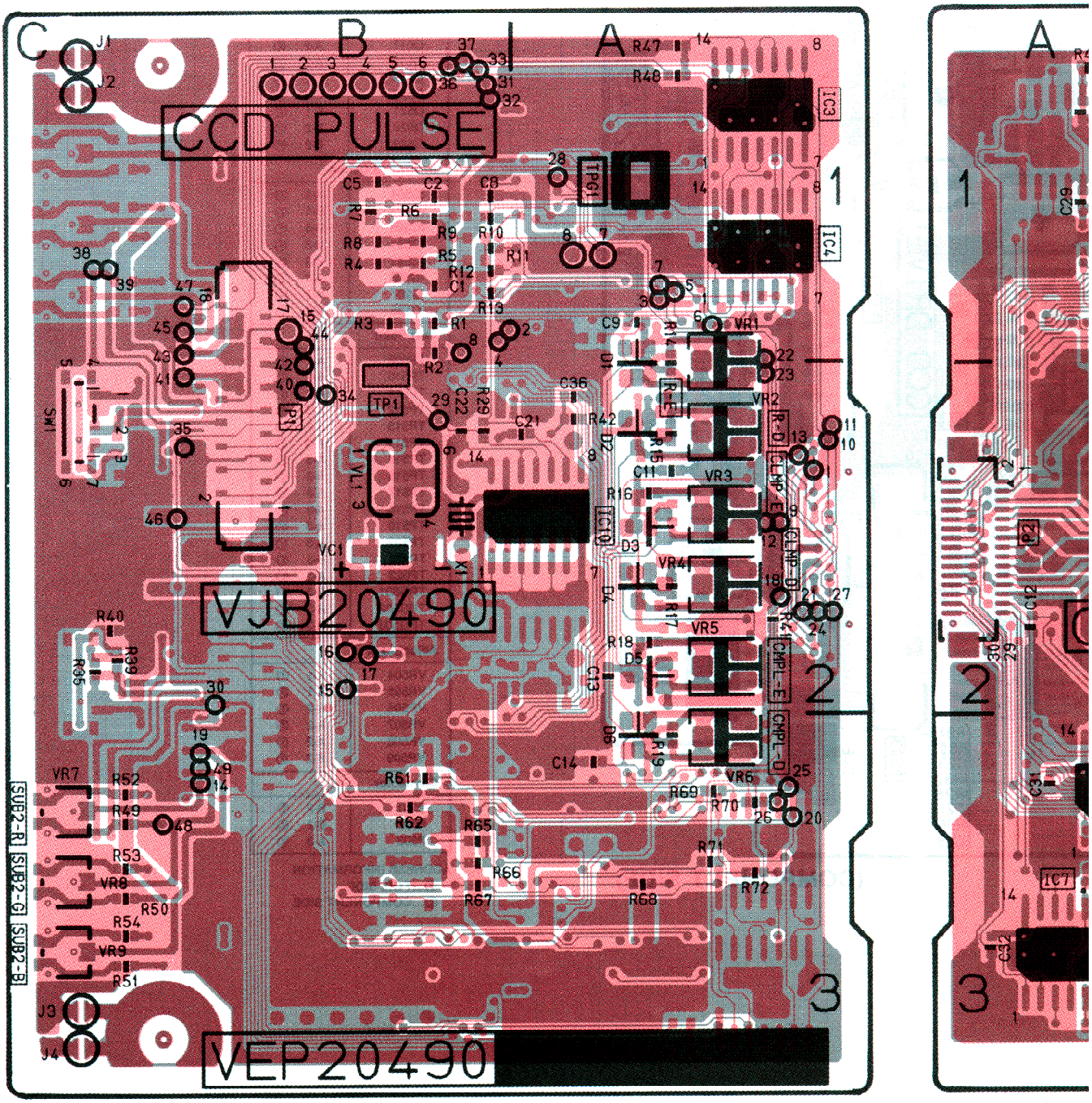

(FOIL SIDE)

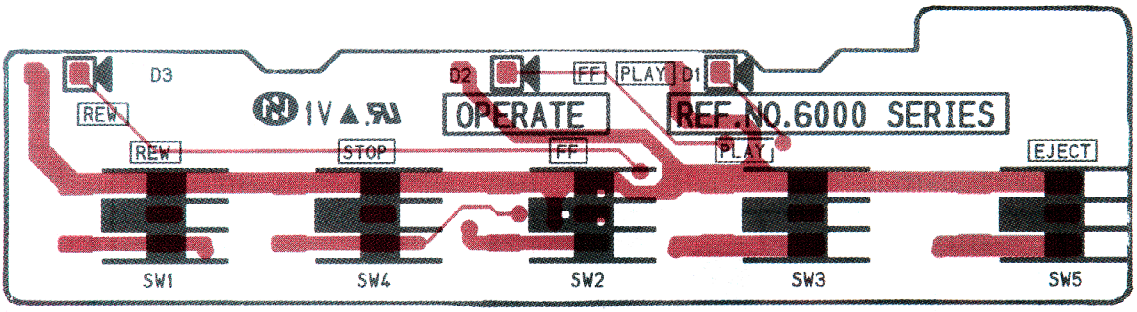

(FOIL SIDE)

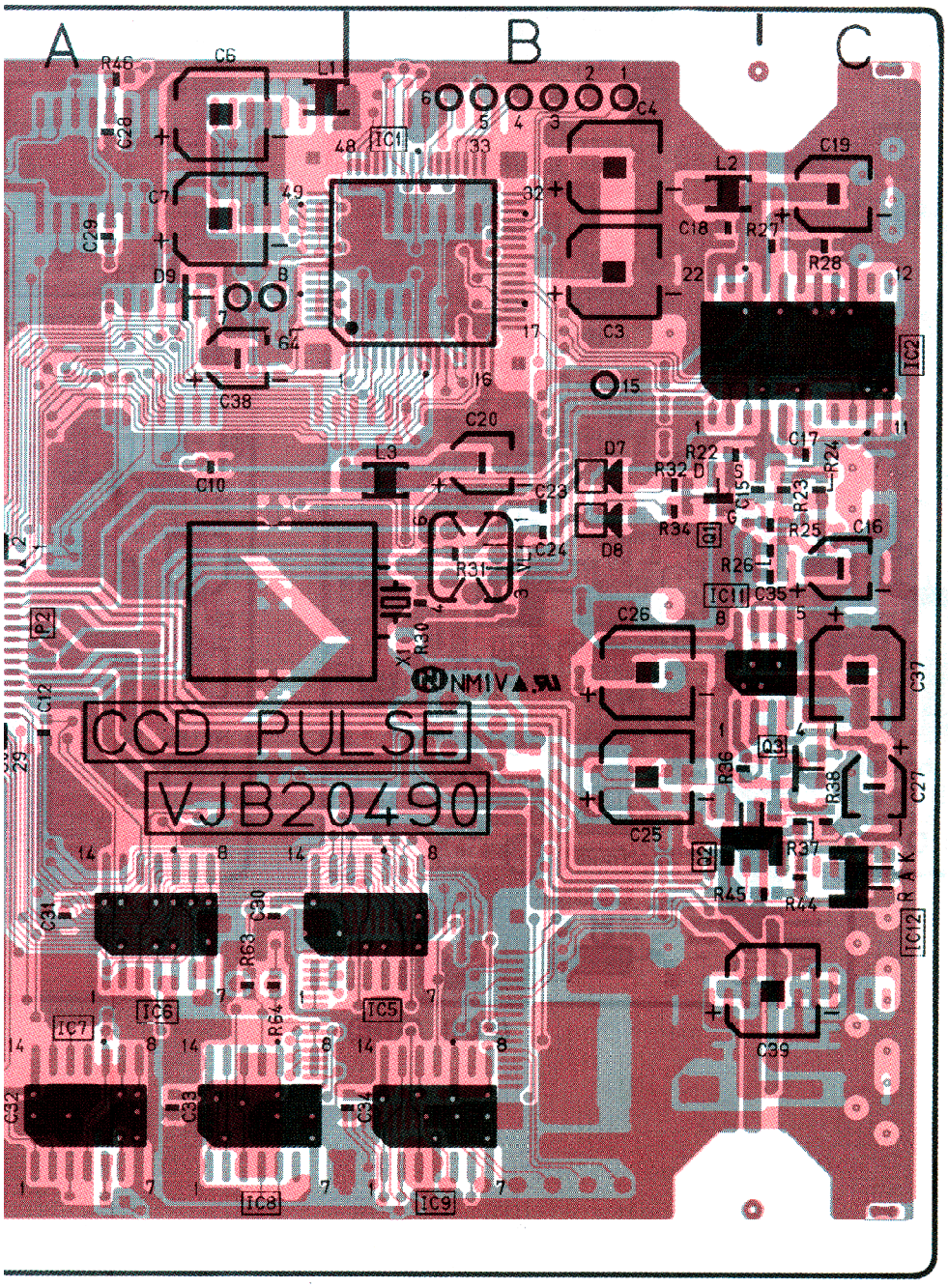

(COMPONENT SIDE)

CCD PULSE C.B.A.	
Transistor	
Q1	B-2 ©
Q2	B-3 ©
Q3	C-2 ©
Integrated Circuit	
IC1	B-1 ©
IC2	C-1 ©
IC3	A-1 Ⓕ
IC4	A-1 Ⓕ
IC5	B-3 ©
IC6	A-3 ©
IC7	A-3 ©
IC8	A-3 ©
IC9	B-3 ©
IC10	A-2 Ⓕ
IC11	C-2 ©
Test Point	
TP1	B-2 Ⓕ
TPG1	A-1 Ⓕ
Adjustment	
VL1	B-2 Ⓕ
VL1	B-2 ©
VR1	A-1 Ⓕ
VR2	A-2 Ⓕ
VR3	A-2 Ⓕ
VR4	A-2 Ⓕ
VR5	A-2 Ⓕ
VR6	A-3 Ⓕ
VR7	B-3 Ⓕ
VR8	B-3 Ⓕ
VR9	B-3 Ⓕ
Connector	
P1	B-2 Ⓕ
P2	A-2 ©

ADDRESS INFORMATION
Ⓕ... FOIL SIDE
©... COMPONENT SIDE

CCD DRIVE C.B.A.(E20)

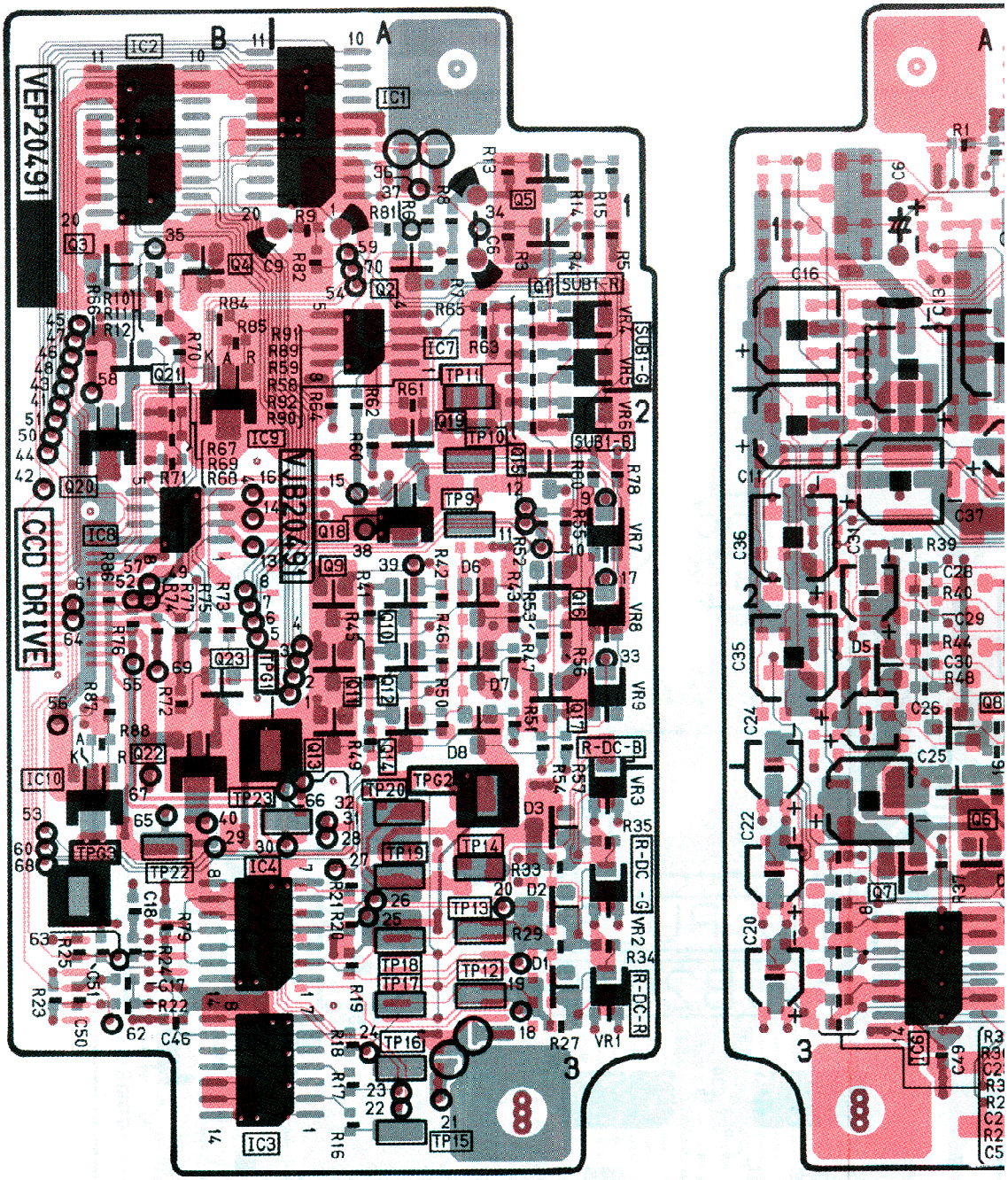

(FOIL SIDE)

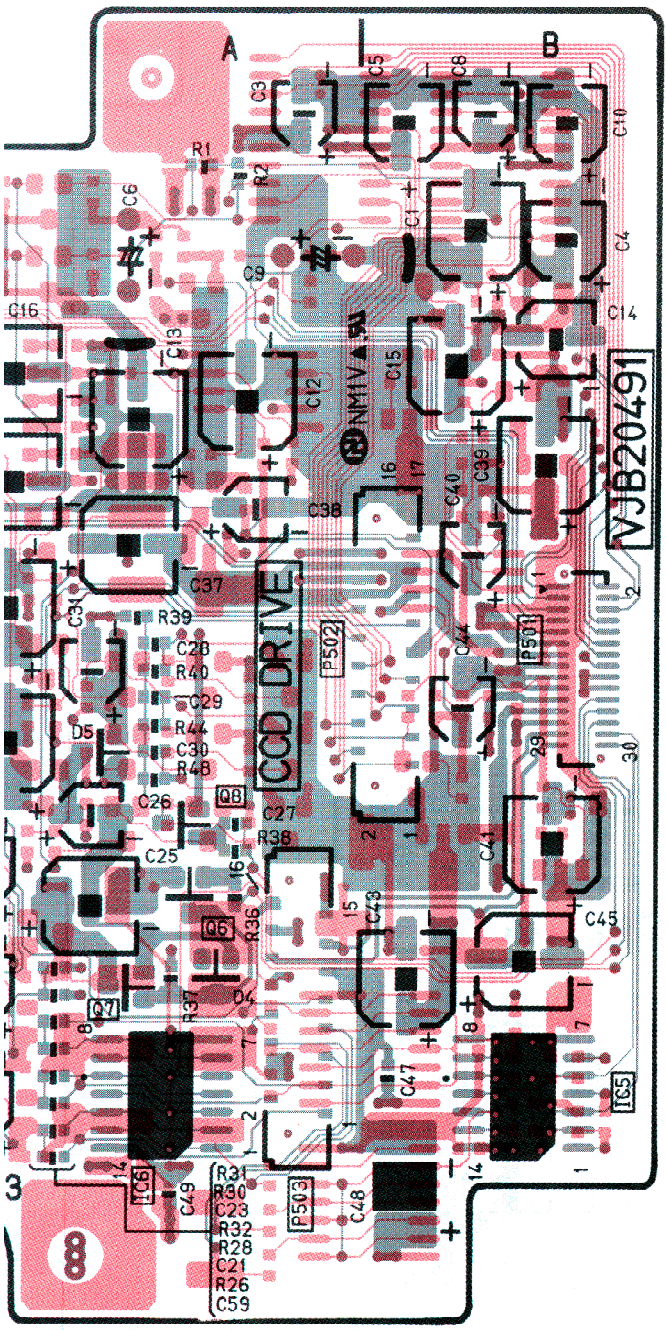

(COMPONENT SIDE)

CCD DRIVE C.B.A.	
Transistor	
Q501	A-1 Ⓕ
Q502	A-1 Ⓕ
Q503	B-1 Ⓕ
Q504	B-1 Ⓕ
Q506	A-3 Ⓒ
Q507	A-3 Ⓒ
Q508	A-2 Ⓒ
Q509	A-2 Ⓕ
Q510	A-2 Ⓕ
Q511	A-2 Ⓕ
Q512	A-2 Ⓕ
Q513	A-2 Ⓕ
Q514	A-2 Ⓕ
Q515	A-2 Ⓕ
Q516	A-2 Ⓕ
Q517	A-2 Ⓕ
Q518	A-2 Ⓕ
Q519	A-2 Ⓕ
Q520	B-2 Ⓕ
Q521	B-1 Ⓕ
Q522	B-2 Ⓕ
Q523	B-2 Ⓕ
Integrated Circuit	
IC501	A-1 Ⓕ
IC502	B-1 Ⓕ
IC503	B-3 Ⓕ
IC504	B-3 Ⓕ
IC505	B-3 Ⓒ
IC506	A-3 Ⓒ
IC507	A-1 Ⓕ
IC508	B-2 Ⓕ
Test Point	
TP509	A-2 Ⓕ
TP510	A-2 Ⓕ
TP511	A-2 Ⓕ
TP512	A-3 Ⓕ
TP513	A-3 Ⓕ
TP514	A-3 Ⓕ
TP515	A-3 Ⓕ
TP516	A-3 Ⓕ
TP517	A-3 Ⓕ
TP518	A-3 Ⓕ
TP519	A-3 Ⓕ
TP520	A-3 Ⓕ
TP522	B-3 Ⓕ
TP523	A-3 Ⓕ
TPG501	B-2 Ⓕ
TPG502	A-3 Ⓕ
TPG503	B-3 Ⓕ
Adjustment	
VR504	A-1 Ⓕ
VR505	A-1 Ⓕ
VR506	A-2 Ⓕ
VR507	A-2 Ⓒ
VR508	A-2 Ⓕ
VR509	A-2 Ⓕ
Connector	
P501	B-2 Ⓒ
P502	B-2 Ⓒ
P503	A-3 Ⓒ

ADDRESS INFORMATION
Ⓕ... FOIL SIDE
Ⓒ... COMPONENT SIDE

SECTION 5

EXPLODED VIEWS & REPLACEMENT PARTS LISTS

CONTENTS

SERVICING FIXTURES & TOOLS LIST ····· PRT-2
VTR MECHANISM SECTION (1) ····· PRT-2
VTR MECHANISM SECTION (2) ····· PRT-4
FRAME & CASING PARTS SECTION (1) ····· PRT-6
FRAME & CASING PARTS SECTION (2) ····· PRT-8
EVF SECTION ····· PRT-10
PACKING PARTS SECTION ····· PRT-11
ELECTRICAL REPLACEMENT PARTS LIST ····· PRT-12

SERVICING FIXTURES & TOOLS LIST

Ref.No.	Part No.	Part Name & Description	Pcs	Remarks
	VFK0326	HEX WRENCH SET	1	
	VFM8180HADH	VHS ALIGNMENT TAPE	1	
	VFK0335	RETAINING RING REMOVER	1	
	VFK0191	POST ADJUSTMENT PLATE	1	
	VFK0190	REEL TABLE HEIGHT GAUGE	1	
	VFK0328	H-POSITION ADJ. FIXTURE	1	
	VFK0329	POST ADJUSTMENT SCREWDRIVER	1	
	VFK0157	FINE ADJUSTMENT SCREWDRIVER	1	
	VFK0133	DIAL TORQUE GAUGE	1	
	VFK0134	ADAPTOR FOR VFK0133	1	
	VFK0180	PLASTIC CLAMPER ONLY	1	
	VFK0948	CHECK LIGHT	1	
	VFK0132	BACK TENSION METER	1	
	VFK27	HEAD CLEANING STICK	1	
	MOR265	MORLYTONE GREASE	1	
	VFK0644	EVR FIXTURE	1	
	VFK0993	EXTENSION CABLE (80P)	1	
	VFK0996	EVR EXTERNSION CABLE	1	

MECHANICAL REPLACEMENT PARTS LIST

1. VTR Mechanism Section (1)

Ref.No.	Part No.	Part Name & Description	Pcs	Remarks
100	VMD0954	CASSETTE GUIDE (L)	1	
101	VDG0610	MAIN ARM GEAR (A)	1	
102	VMD0953	CASSETTE GUIDE (R)	1	
103	VXA4856	CASSETTE HOLDER UNIT	1	
104	VXP1139	DAMPER UNIT	1	
105	VXL1984	LOCK LEVER UNIT	1	
107	VXA3863	STAND (R) UNIT	1	
109	VMB1329	HOLDER SPRING (L)	1	
110	VMB1621	HOLDER SPRING (R)	1	
112	VSH0026	LEAF SW	1	
113	VMD0952	LEAF SW COVER (O)	1	
114	VMB1330	LOCK BOARD SPRING	1	
115	VXA3023	STAND (L) UNIT	1	
116	VMB1453	LOCK LEVER (B) SPRING	1	
117	VML1650	LOCK LEVER (B)	1	
118	VDP1096	LOCK ROLLER (O)	1	
119	VXL1648	LOCK BOARD UNIT	1	
120	VMB1331	LOCK LEVER (A) SPRING	1	
121	VML1649	LOCK LEVER (A)	1	
122	VXA4832	CASSETTE UP (O) UNIT	1	
123	VXR0200	SUPPLY REEL TABLE	1	
124	VXP0900B	SUPPLY CLUTCH UNIT	1	
125	VXP0901B	TAKE-UP CLUTCH UNIT	1	
126	VXR0201	TAKE-UP REEL TABLE	1	
128	VSQ0808	DEW DETECTOR UNIT	1	
129	VGQ0888	CASSETTE OPENER	1	
135	VXZ0246	SOFT BRAKE (T) UNIT	1	
136	VXP0899B	DRIVE GEAR ARM UNIT	1	
137	VHD0593	CYLINDER UNIT SCREW	2	
140	VEG1104	CYLINDER UNIT	1	
141	VDV0167	LOADING BELT	1	
142	VDG0370	INTERMEDIATE PULLEY GEAR	1	
143	VMX0653	CUT WASHER	1	
144	VDG0372	DRIVE GEAR (B)	1	
145	VXS0119	EARTH BRUSH UNIT	1	
147	VDG0371	DRIVE GEAR (A)	1	
148	VDG0202	CAM GEAR	1	
149	VMX0388	THRUST WASHER	3	
150	VXL1654	MAIN ROD (K) UNIT	1	
151	VDG0211	LOADING GEAR (C) (2)	1	
152	VMB1324	LOADING GEAR (C) SPRING	1	
153	VDG0210	LOADING GEAR (C) (1)	1	
154	VMA7228	GUARD PLATE	1	
155	VML1707	DRIVE ARMKICK LEVER	1	
156	VMB1388	DRIVE ARMKICK LEVER SPRING	1	
157	VXP0632	SECTOR GEAR UNIT	1	
158	VMA6560	SAFETY TAB SW BASE	1	
159	VSH0023	SAFETY TAB SW	1	
160	VDG0207	DRIVE GEAR (C)	1	
161	VSS0193	MODE SW	1	FOR MECHANISM CONNECTION C.B.A. (VES0689)
163	VEK5926	STATOR UNIT	1	
164	VXP1355	ROTOR UNIT	1	
165	VXP0897	MAIN PULLEY UNIT	1	
166	VDV0155	CAPSTAN BELT	1	
167	VMD0935	BELT COVER	1	
170	VHD0750	CYLINDER SCREW	3	
171	VWJ0636	CAPSTAN FPC	1	
173	VEK6098	PHOTO TR (R) U.	1	
174	VEK6035	PHOTO TR (L) U.	1	
175	VEP03B06A	RT-FPC	1	

EXPLODED VIEWS

❶ *VTR Mechanism Section (1)*

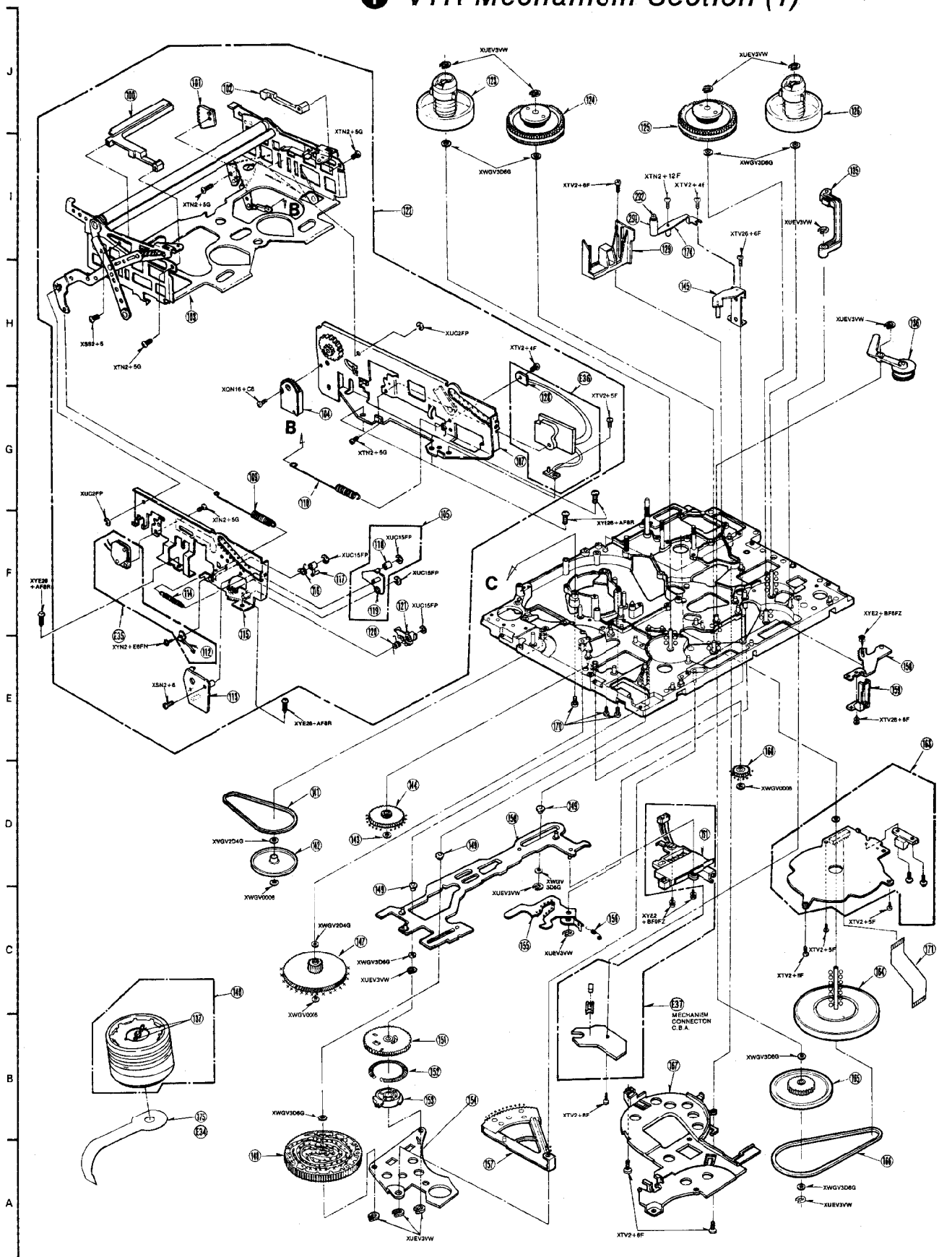

❷ VTR Mechanism Section (2)

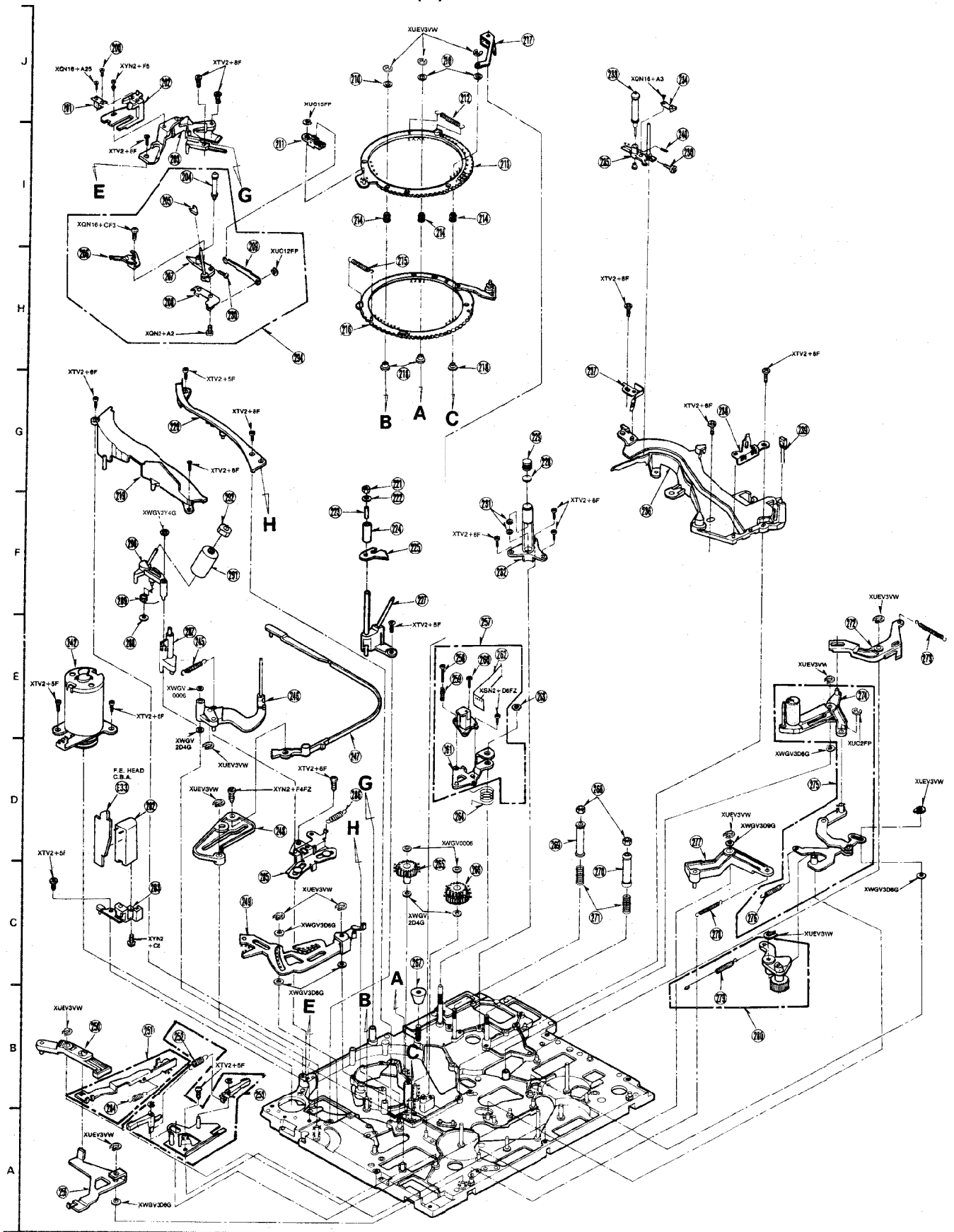

2. VTR Mechanism Section (2)

Ref.No.	Part No.	Part Name & Description	Pcs	Remarks
200	VHD0282	P2 ADJUST PLATE SCREW	1	
201	VMA6542	P2 ADJUST PLATE	1	
202	VMD0701	SUPPLY POST STOPPER	1	
203	VMD1166	V STOPPER BASE	1	
204	VXP0841	SUPPLY ROLLER POST UNIT	1	
205	VGQ0842	P2 CAP	1	
206	VMD0769	TAPE PROTECTOR	1	
207	VXA2221	SUPPLY SHAFT HOLDER(1)UNIT	1	
208	VXA2256	SUPPLY SHAFT HOLDER ANGLE	1	
		UNIT	1	
209	VMM0144	CONNECTION ROD	1	
210	VMX1282	RING GUIDE SLEEVE UNIT	3	
211	VXA2231	CONNECTION TIE UNIT	1	
212	VMB1319	LOADING SPRING	1	
213	VXA2253	LOADING RING (S) (1) UNIT	1	
214	VDP1160	RING GUIDE ROLLER	3	
215	VMB1319	LOADING SPRING	1	
216	VXA3576	LOADING RING (T) (1) UNIT	1	
217	VMC0250	PRESSER SPRING	1	
218	VMX1279	RING GUIDE SLEEVE	3	
219	VMD1155	LOADING GUIDE (S) (1)	1	
220	VMD1128	LOADING GUIDE (S) (2)	1	
221	VMX1088	SUPPLY UPPER LIMITER	1	
222	VMS2888	P1 POST SLEEVE (B)	1	
223	VMX1581	P1 COLLAR	1	
224	VDP1265	P1 ROLLER	1	
225	VMA6547	P1 LIMITER PLATE	1	
227	VXA3112	P1 BASE (1) UNIT	1	
228	VXD0098	THRUST SPACER	1	
229	VHD0204	THRUST SCREW NUT	1	
230	VHD0368	ROLLER POST SCREW	2	
231	VMX0775	DUST SEAL	2	
232	VXD0108	CAPSTAN HOUSING UNIT	1	
233	VXP0927	TAKE-UP ROLLER POST UNIT	1	
234	VMA6546	TAKE-UP SHAFT HOLDER ANGLE	1	
235	VXA3116	TAKE-UP SHAFT HOLDER (A)	1	
		UNIT		
236	VMD1165	TAKE-UP LOADING BASE	1	
237	VMC0352	SHAFT HOLDER PRESSURE	1	
		SPRING		
238	VMA7226	SHAFT HOLDER PLATE ANGLE	1	
239	LN59NV	LED	1	
240	VHD0367	TAKE-UP SHAFT ADJ. SCREW	1	
242	VEM0431	LOADING MOTOR UNIT	1	<!>
245	VMB1747	TENSION SPRING	1	
246	VXL1262	TENSION ARM UNIT	1	
247	VXZ0245	TENSION BAND UNIT	1	
248	VML2065B	BAND RELEASE ARM	1	
249	VXA4828	TENSION KICK LEVER	1	
250	VML2064B	EJECT LEVER (A)	1	
251	VXA3020	SUPPORTER UNIT	1	
252	VMB1405	BRAKE SPRING	1	
253	VXA4262	BRAKE UNIT	1	
256	VML2073	EJECT LEVER (B)	1	
257	VED0221	A/C HEAD UNIT	1	
258	VHD0275	A/C HEAD ADJUST SCREW	1	
259	VMB1321	A/C HEAD ADJUST SPRING	1	
260	VHD0381	A/C HEAD TILT ADJUST SCREW	1	
261	VXL2256	A/C HEAD ARM UNIT	1	
262	VWJ0608	A/C HEAD FPC	1	
263	VHN0077	A/C HEAD ARM NUT	1	
264	VMB1320	A/C HEAD SPRING	1	
265	VDG0208	LOADING GEAR (A)	1	
266	VDG0461	LOADING GEAR (B)	1	
267	VHN0197	ADJUST NUT	1	
268	VHN0047	M2 NYLON NUT	2	
269	VMS2693	P4 POST SLEEVE	1	
270	VXJ0057	P5 POST SLEEVE	1	
271	VMB1322	P4,P5 SPRING	2	
272	VML2067B	PINCH LEVER	1	
273	VMB2071	PINCH LEVER SPRING	1	
274	VXL1652	PINCH ROLLER ARM (1) UNIT	1	
275	VXL1650	PINCH ARM UNIT	1	
276	VMB1326	PINCH ARM SPRING	1	

Ref.No.	Part No.	Part Name & Description	Pcs	Remarks
277	VXL1264B	SOFT BRAKE LEVER (S) UNIT	1	
278	VMB1314	SOFT BRAKE SPRING (S)	1	
279	VMB1771	REW ARM SPRING	1	
280	VXL1649B	FF/REW ARM UNIT	1	
282	VBS0021	FE HEAD	1	
283	VMD1129	FE HEAD BASE	1	
284	VMB1447	SUPPORTER SPRING	1	
285	VXA3579	SLIDE BASE (O) UNIT	1	
286	VMB1965	SLIDE SPRING	1	
287	VML2285	IMPEDANCE LEVER	1	
288	VHN0109	PUSH NUT	1	
289	VMB1964	IMPEDANCE DRIVE SPRING	1	
290	VXL1879	IMPEDANCE ARM (1) UNIT	1	
291	VDP1285	IMPEDANCE ROLLER	1	
292	VMX1088	SUPPLY UPPER LIMITER	1	
294	VXA2220	SUPPLY SHAFT HOLDER UNIT	1	

❸ *Frame & Casing Parts Section (1)*

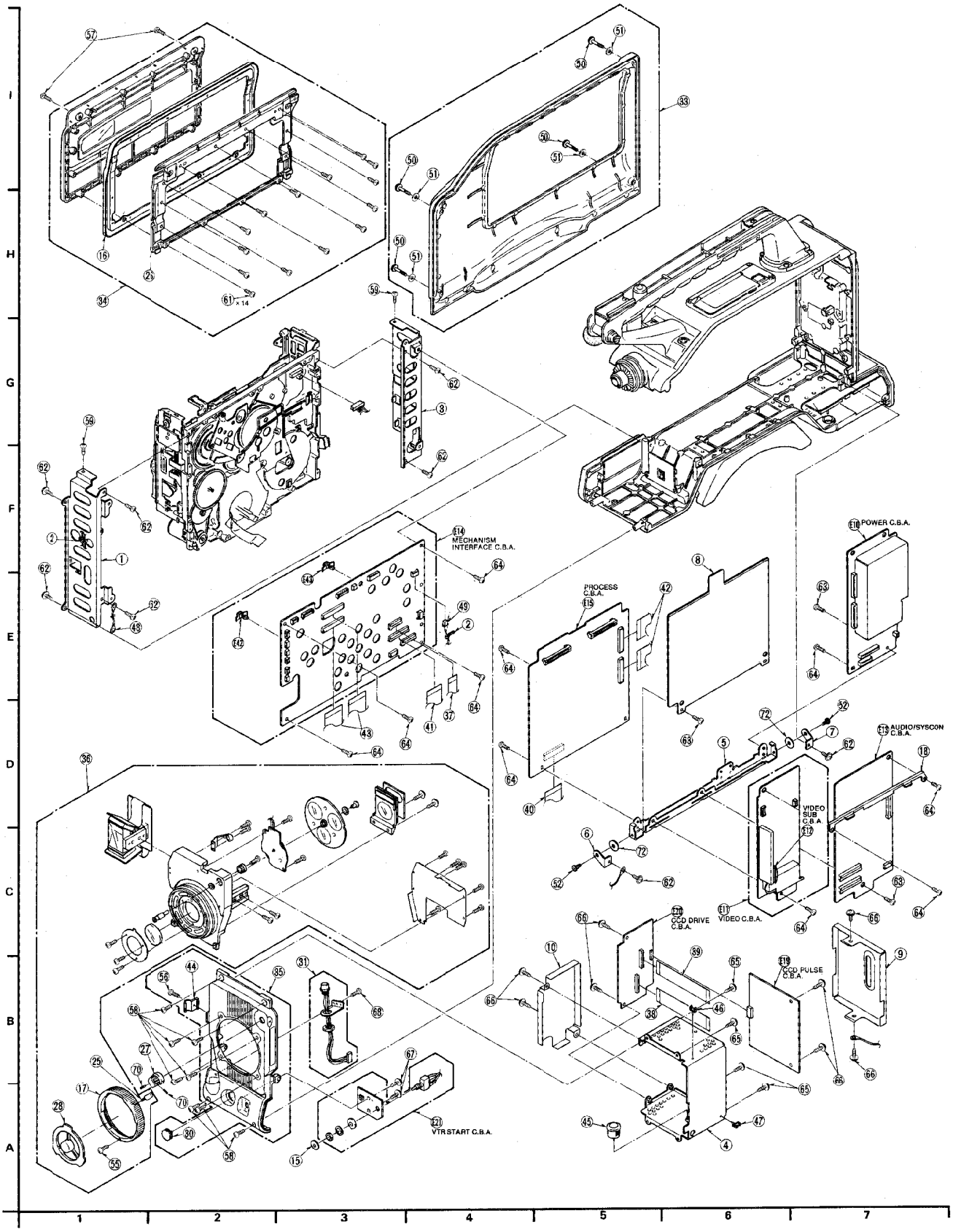

3. Frame & Casing Parts Section (1)

Ref.No.	Part No.	Part Name & Description	Pcs	Remarks
1	VMP4268	MECHANISM ANGLE (L)	1	
2	VJF0300	CLAMPER	2	
3	VMP4269	MECHANISM ANGLE (R)	1	
4	VMP4271	CAMERA C.B.A. ANGLE	1	
5	VMP4272	PROCESS C.B.A. ANGLE	1	
6	VMP4273	C.B.A. ROTATE ANGLE (L)	1	
7	VMP4274	C.B.A. ROTATE ANGLE (R)	1	
8	VSC4024	SHIELD PLATE	1	
9	VSC4013	SHIELD PLATE (A)	1	
10	VSC4014	SHIELD PLATE (B)	1	
15	VMG0646	SPACER	1	
16	VMG0796	CASSETTE COVER RUBBER	1	
17	VDW0249	FOCUS RING	1	
25	VHD0809	FOCUS RING KNOB	1	
26	VGQ3416	CASSETTE RUBBER HOLDER	1	
27	VGU6513	FILTER KNOB	1	
28	VKF2125	MOUNT CAP	1	
30	VGU6714	VTR START KNOB	1	
31	VEK6694	LENS INTERFACE CABLE U	1	
33	VYK5564	SIDE CASE (L) U.	1	
34	VYF2044	CASSETTE COVER U.	1	
35	VYK5561	FRONT COVER (1) U.	1	
36	VYQ0987	CAMERA U.	1	
37	VWJ12C2105L0	POWER FLEX. CABLE (1)	1	
38	VWJ16SW070L1	CCD FLEX. CABLE (1)	1	
39	VWJ17SW070L1	CCD FLEX. CABLE (2)	1	
40	VWJ18C2150L0	PROCESS FLEX. CABLE (1)	1	
41	VWJ22C2100L0	POWER FLEX. CABLE (2)	1	
42	VWJ25C2050L0	PROCESS FLEX. CABLE (2)	2	
43	VWJ26C2180L0	VIDEO FLEX. CABLE	2	
44	VJF0804	LENS CABLE CLAMPER	1	
45	VJF1091	BUSHING	1	
46	VJF0496	CLAMPER	1	
47	VJF0909	CLAMPER	1	
48	VEE9074	EARTH CABLE	1	
49	VEE8861	3P CONNECTOR	1	
50	VHD0820	SCREW	4	
51	VMX1090	WASHER	4	
52	VHD0325	STEP SCREW	2	
55	XQN2+A4FZ	SCREW	1	
56	XSB2+5FZ	SCREW	1	
57	XSB26+8FZ	SCREW	2	
58	XSB3+6FZS	SCREW	8	
59	XSN26+4	SCREW	2	
61	XTB26+6GFZ	SCREW	14	
62	XTV26+4F	SCREW	8	
63	XYC3+BF6	SCREW	3	
64	XYE3+EF6R	SCREW	9	
65	XYN3+C6	SCREW	4	
66	XYN3+E6FR	SCREW	6	
67	XYN3+K6RS	SCREW	2	
68	XYN26+C6	SCREW	1	
69	XYN26+K6	SCREW	2	
72	XWGV4Y12G	WASHER	2	

Ref.No.	Part No.	Part Name & Description	Pcs	Remarks

❹ *Frame & Casing Parts Section (2)*

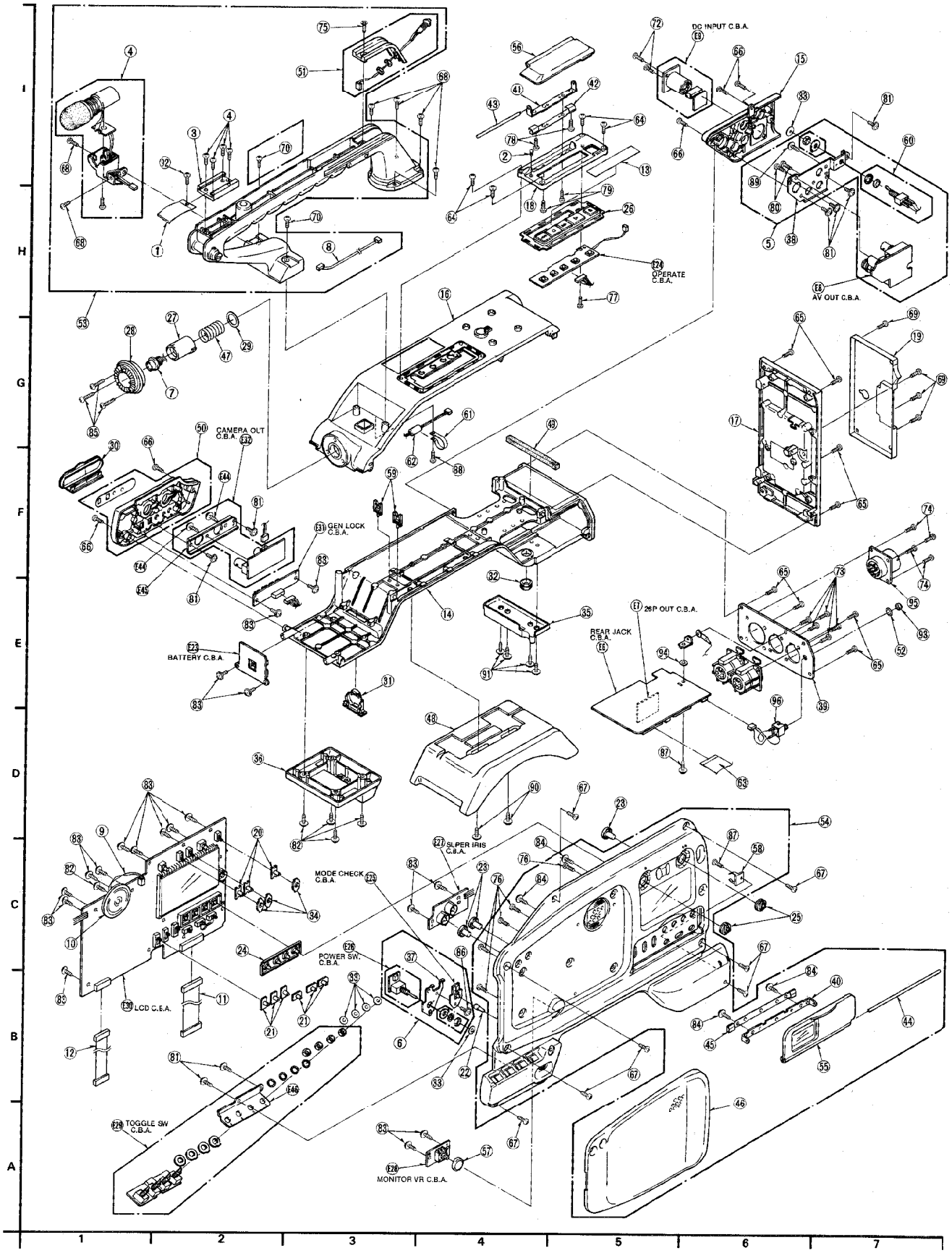

4. Frame & Casing Parts Section (2)

Ref.No.	Part No.	Part Name & Description	Pcs	Remarks
1	4G28145	SPRING	1	
2	QBG1210X	RUBBER	1	
3	V5MA0046A4	SHOE	1	
4	VEK6714	MIC U.	1	
7	VEK7036	EVF INTERFACE CABLE U.	1	
8	VEE8855	MIC CABLE	1	
9	VEE8847	SPEAKER CABLE	1	
10	EAS3P127B	SPEAKER	1	
11	VEE8844	LCD CABLE	1	
12	VEE8846	TOGGLE SW CABLE	1	
13	VGH3019	KEY BOARD LABEL		
14	VGM1059	BOTTON CASE	1	
15	VGM1063	AV JACK PANEL	1	
16	VGM1057	TOP CASE	1	
17	VGM1058	BACK COVER	1	
18	VGK2058	KEY BOARD FRAME	1	
19	VJF1125	ANTONBAUER BATTERY HOLDER	1	
20	VGU6028	SLIDE KNOB (A)	3	
21	VGU6514	SLIDE KNOB (B)	6	
22	VGU4906	MODE CHECK KNOB	1	
23	VGU6511	PUSH BUTTON	3	
24	VGU5973	OPERATION BUTTON	1	
25	VGU6512	VR KNOB	2	
26	VGU6577	KEY BOARD BUTTON	1	
27	VGQ3455	EVF CONNECTOR HOLDER	1	
28	VGQ3454	EVF HOLD BASE	1	
29	VGF0514	SPACER	1	
30	VKF2142	GEN LOCK COVER	1	
31	VKF1707	BATTER COVER	1	
32	VMG0643	BRAKER SW BUTTON	1	
33	VMG0646	RUBBER	6	
34	VMG0743	SLIDE KNOB RUBBER	3	
35	VMP4289	TRIPOD ANGLE (REAR)	1	
36	VMP4288	TRIPOD ANGLE (FRONT)	1	
37	VMP4285	POWER SW C.B.A. ANGLE	1	
38	VMP4264	AV JACK ANGLE	1	
39	VMP4270	JACK C.B.A. ANGLE	1	
40	VMP4266	OPERATION DOOR ANGLE	1	
41	VMP3736	KEY BOARD DOOR ANGLE	1	
42	VMC0883	KEY BOARD DOOR SPRING	1	
43	VMS4947	KEY BOARD DOOR SHAFT	1	
44	VMS5520	OPERATION DOOR SHAFT	1	
45	VMC0982	OPERATION DOOR SPRING	1	
46	VMT0529	FACE PAD	1	
47	VMB2224	SPRING	1	
48	VMT0556	SHOULDER PAD	1	
49	VMT0551	RUBBER	1	
50	VYP5483	GEN LOCK PANEL U.	1	
51	VYF1888	TALLY COVER U.	1	
52	VMX0531	SPACER	1	
53	VYH0148	HANDLE U.	1	
54	VYP5480	SIDE CASE (R) U.	1	
55	VYF2043	OPERATION DOOR U.	1	
56	VKW1642	KEY BOARD DOOR	1	
57	VXU1214	VR KNOB U.	1	
58	VJF1092	CLAMPER	1	
59	VJF0909	CLAMPER	1	
60	VST0129	POWER SELECT SW U.	1	
61	VJF0980	CLAMPER	1	
62	VLP0186	FERRITE CORE	1	
63	VWJ26C2180L0	FLEX. CABLE	1	
64	XSB2+6FZ	SCREW	4	
65	XSB3+6FZS	SCREW	8	
66	XSB3+10FZS	SCREW	5	
67	XSB3+12FZS	SCREW	7	
68	XSB3+8FZS	SCREW	6	
69	XSB4+6FZS	SCREW	4	
70	XSB4+16FZS	SCREW	2	
71	XSN2+6FZ	SCREW	4	
72	XSN26+6FC	SCREW	2	
73	XSN26+6FZ	SCREW	5	
74	XSN3+6FCS	SCREW	4	
75	XSS3+6FZS	SCREW	1	
76	XTN3+6G	SCREW	5	
77	XTN2+5J	SCREW	1	
78	XTB26+4FFZ	SCREW	2	
79	XTV26+5F	SCREW	2	
80	XTV3+6GFZ	SCREW	2	
81	XYN3+C5	SCREW	8	
82	XYN3+K8	SCREW	5	
83	XYN3+K6RS	SCREW	18	
84	XYN26+C4	SCREW	4	
85	XYN26+K16FZ	SCREW	3	
86	XYN26+K6FR	SCREW	1	
87	XYN26+K6	SCREW	2	
88	XYN3+F10	SCREW	1	
89	XYN3+C4	SCREW	1	
90	XYN3+F3	SCREW	2	
91	XYN3+F3FZS	SCREW	4	
92	YWFAC17XFM2	SCREW	1	
93	VHN0194	NUT	1	
94	XWGV3Z8G	SCREW	1	
95	VJP1957	VTR CONNECTOR	1	
96	VJJ0353	EAR PHONE JACK	1	

❺ EVF Section

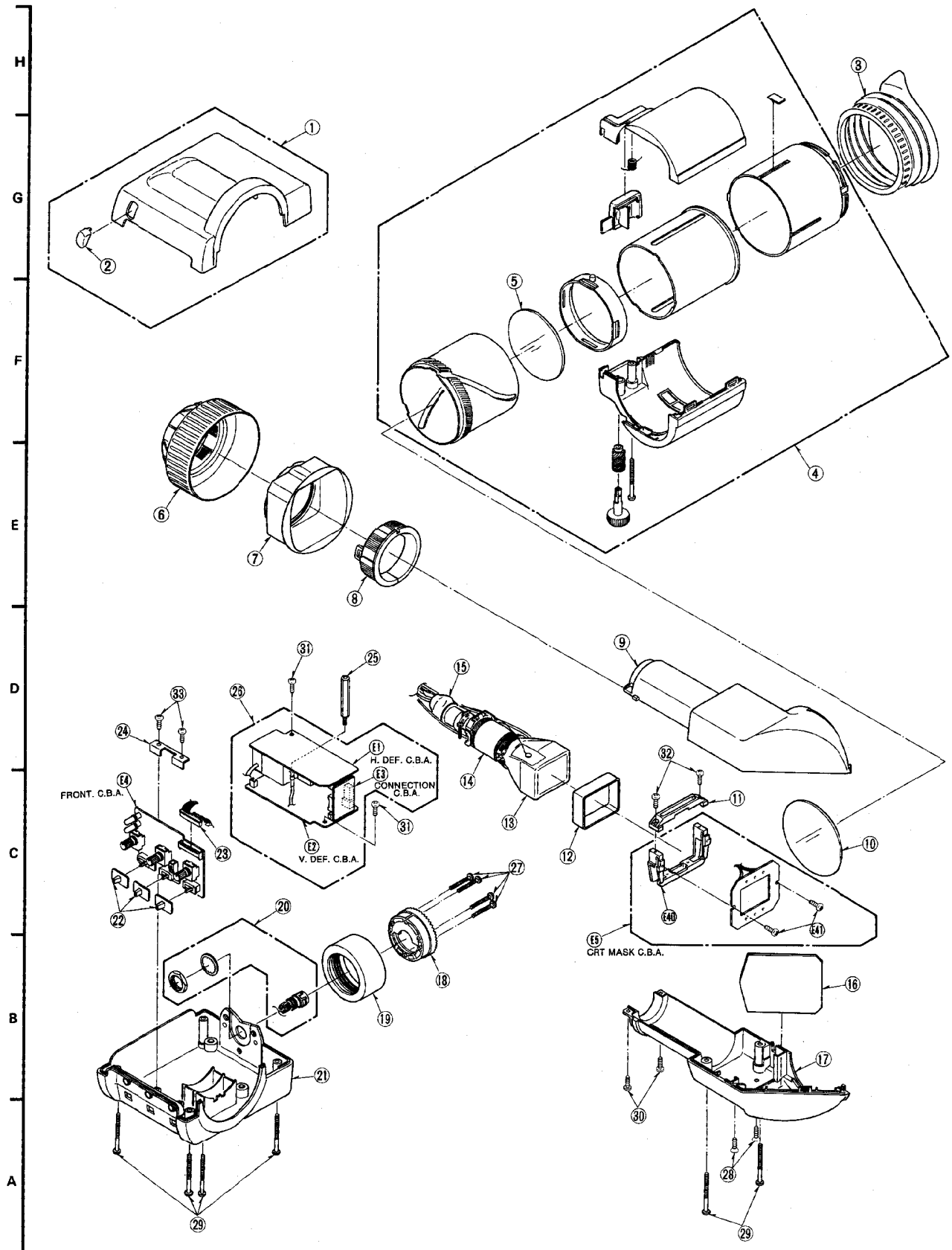

5. EVF Section

Ref.No.		Part No.	Part Name & Description	Pcs	Remarks
1		VYK6102	EVF MAIN CASE UPPER U.	1	
2		VGP3621	TALLY LAMP COVER	1	
3		VMG0799	EYE CAF	1	
4		VYC0608	EYE PIECE U.	1	
5		VDL0416	LENS	1	
6		VGP3619	LOCK RING (OUTER)	1	
7		VMX2305	LOCK RING SPACER	1	
8		VGP3620	LOCK RING (INNER)	1	
9		VGP3617	CRT CASE UPPER	1	
10		VDL0418	PROTECT COVER	1	
11		VJF0899	CRT HOLDER UPPER	1	
12		VMX1899	CRT SPACER	1	
13		M04KYS07WB	CRT	1	<!>
14		ELY15V114G	DEFLECTION YOKE	1	<!>
15		VEK7034	CRT SOCKET U.	1	
16		VDL0417	MIRROR	1	
17		VGP3618	CRT CASE LOWER	1	
18		VGQ3433	EVF GEAR	1	
19		VMP3385	EVF FIX. RING	1	
20		VEK7037	EVF CONNECTION U.	1	
21		VGM1102	EVF MAIN CASE LOWER U.	1	
22		VGU3364	SLIDE KNOB	3	
23		VEE8849	FRONT C.B.A. CABLE	1	
24		VMP4283	C.B.A. HOLDER	1	
25		VMX2308	SPACER	1	
27		XYN3+C14FZ	SCREW	4	
28		XTS2+6GFZ	SCREW	2	
29		XTN3+25GFZ	SCREW	6	
30		XTN2+6G	SCREW	2	
31		XYN26+K6FR	SCREW	2	
32		XTN2+10G	SCREW	2	
33		XTN3+6G	SCREW	2	

❻ *Packing Parts Section*

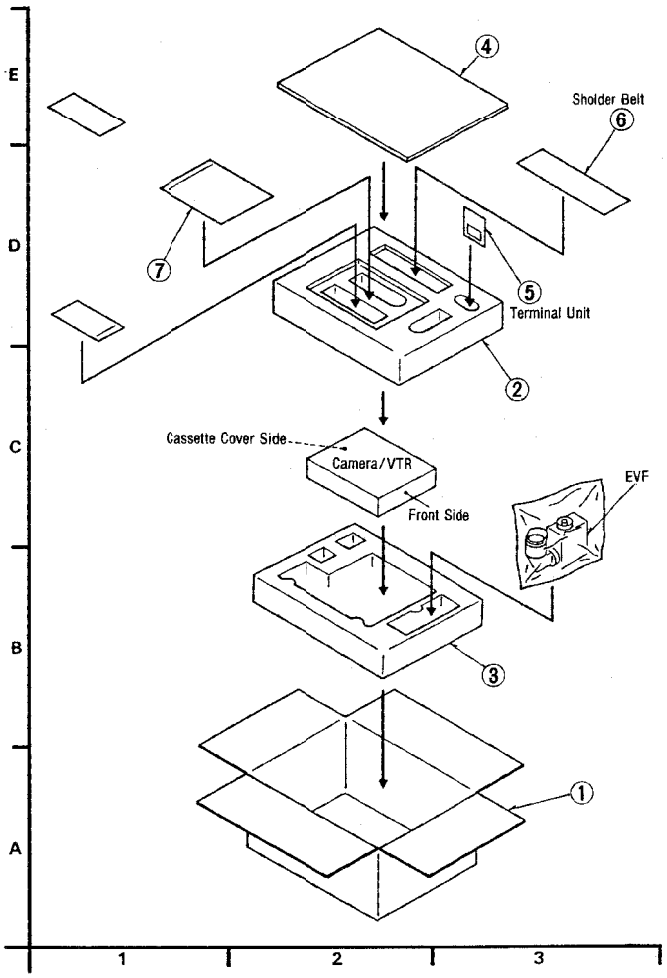

6. Packing Parts Section

Ref.No.		Part No.	Part Name & Description	Pcs	Remarks
1		VPG7534	PACKING CASE	1	
2		VPN3920	CUSHION (UPPER)	1	
3		VPN3921	CUSHION (LOWER)	1	
4		VPN3922	PAD	1	
5		VEJ1439	TERMINAL UNIT	1	
6		VFC0604	SHOULDER BELT	1	
7		VQT5530	OPERATING INSTRUCTIONS	1	

ELECTRICAL REPLACEMENT PARTS LIST

Ref.No.	Part No.	Part Name & Description	Pcs	Remarks
E1	VEP27086A	P.C.BOARD W/COMPONENT H-DEF	1	(RTL)<R>
E2	VEP27087A	P.C.BOARD W/COMPONENT V-DEF	1	(RTL)<R>
E3	VEP27088A	P.C.BOARD W/COMPONENT EVF VIDEO	1	(RTL)<R>
E4	VEP27089A	P.C.BOARD W/COMPONENT FRONT	1	(RTL)<R>
E5	VEP27090A	P.C.BOARD W/COMPONENT CRT MASK	1	(RTL)<R>
E6	VEP01585B	P.C.BOARD W/COMPONENT JACK	1	(RTL)<R>
E8	VEP00U24A	P.C.BOARD W/COMPONENT AV JACK	1	(RTL)<R>
E9	VEP00U51A	P.C.BOARD W/COMPONENT DC INPUT	1	(RTL)<R>
E10	VEP01584B	P.C.BOARD W/COMPONENT POWER	1	(RTL)<R>
E11	VEP03B01B	P.C.BOARD W/COMPONENT VIDEO	1	(RTL)<R>
E12	VEP00U81A	P.C.BOARD W/COMPONENT VIDEO SUB	1	(RTL)<R> FOR VEP03B01B
E13	VEP04442C	P.C.BOARD W/COMPONENT AUDIO & SYSCON	1	(RTL)<R>
E14	VEP06957A	P.C.BOARD W/COMPONENT MECHA INTERFACE	1	(RTL)<R>
E15	VEP23198B	P.C.BOARD W/COMPONENT PROCESS	1	(RTL)<R>
E19	VEP20490B	P.C.BOARD W/COMPONENT CAMERA PULSE	1	(RTL)<R>
E20	VEP20491A	P.C.BOARD W/COMPONENT CAMERA DRIVE	1	(RTL)<R>
E21	VEP00U25A	P.C.BOARD W/COMPONENT VTR START	1	(RTL)<R>
E23	VEP00U26A	P.C.BOARD W/COMPONENT BATTERY	1	(RTL)<R>
E24	VEP86143A	P.C.BOARD W/COMPONENT OPERATE	1	(RTL)<R>
E25	VEP00U21A	P.C.BOARD W/COMPONENT MODE CHECK SW	1	(RTL)<R>
E26	VEP00U56A	P.C.BOARD W/COMPONENT POWER SW	1	(RTL)<R>
E27	VEP00U18A	P.C.BOARD W/COMPONENT SUPER IRIS	1	(RTL)<R>
E28	VEP00U19A	P.C.BOARD W/COMPONENT MONITOR VR	1	(RTL)<R>
E29	VEP00U20A	P.C.BOARD W/COMPONENT TOGGLE SW	1	(RTL)<R>
E30	VEP06956A	P.C.BOARD W/COMPONENT LCD	1	(RTL)<R>
E31	VEP00U22A	P.C.BOARD W/COMPONENT GENLOCK	1	(RTL)<R>
E32	VEP00U23A	P.C.BOARD W/COMPONENT CAMERA OUT	1	(RTL)<R>
E33	VEK5868	P.C.BOARD W/COMPONENT FE HEAD	1	(RTL)<R>
E34	VEP03B06A	P.C.BOARD W/COMPONENT RT FPC	1	(RTL)<R>
E35	VEK6035	P.C.BOARD W/COMPONENT PHOTO HOLDER (L)	1	(RTL)<R>
E36	VEK6098	P.C.BOARD W/COMPONENT PHOTO HOLDER (R)	1	(RTL)<R>
E37	VES0689	P.C.BOARD W/COMPONENT MECHANISM CONNECTION	1	(RTL)<R>
**********	VEP27086A	P.C.BOARD W/COMPONENT H-DEF		
		CAPACITORS		
C7401,02	ECEA1AGE221	E.CAPACITOR 10V 220U	2	
C7403	VCF0066J123	P.CAPACITOR	1	
C7404	VCF0066J332	P.CAPACITOR	1	
C7407	ECEA1HGE101	E.CAPACITOR 50V 100U	1	
C7408,09	ECKD3A472MEH	C.CAPACITOR 1KV 4700P	2	
C7410	VCF0066J223	P.CAPACITOR	1	
C7414	VCF0066J182	P.CAPACITOR	1	
C7416	VCEA0JAP330	E.CAPACITOR 6.3V 33U	1	
C7417	ECEA1AGE221	E.CAPACITOR 10V 220U	1	
D7401	EC11FS2	DIODE	1	<R>
D7402	MA142K	DIODE	1	<R>
D7403	MA141K	DIODE	1	<R>
D7404	EC11FS2	DIODE	1	<R>
D7405	MA141K	DIODE	1	<R>
L7402	ELH5L220	COIL	1	
L7403	VLQEL06F220J	COIL	1	
L7404	VLQ0620	COIL	1	

Ref.No.	Part No.	Part Name & Description	Pcs	Remarks
P7007	VJP2264	CONNECTOR (MALE)	1	
P7011	VJP1232T	CONNECTOR (MALE)	1	
P7013	VJP1595T	CONNECTOR (MALE)	1	
Q7402,03	2SK1954	TRANSISTOR	2	<R>
		RESISTORS		
R7405	ERJ3GEYJ105	M.RESISTOR CH 3W 1M	1	
R7406	ERJ3GEYJ101	M.RESISTOR CH 3W 100	1	
R7408	ERDS2TJ222	C.RESISTOR 1/4W 2.2K	1	
R7409-11	ERJ3GEYJ105	M.RESISTOR CH 3W 1M	3	
R7412	ERJ3GEY0R00	M.RESISTOR CH 1/16W 0	1	
R7413,14	ERJ3GEYK155	M.RESISTOR CH 3W 1.5M	2	
R7417	ERJ3GEYJ101	M.RESISTOR CH 3W 100	1	
R7418	ERJ3GEYJ473	M.RESISTOR CH 3W 47K	1	
R7419	ERJ3GEYJ223	M.RESISTOR CH 3W 22K	1	
R7420	ERJ3GEYJ101	M.RESISTOR CH 3W 100	1	
R7420	ERJ3GEYJ910	M.RESISTOR CH 3W 91	1	
T7401	ETF18L34A	TRANSFORMER	1	<!>
VR7402	EVMLRGA00B16	V.RESISTOR	1	
VR7403	EVML3GA00B55	V.RESISTOR	1	
**********	VEP27087A	P.C.BOARD W/COMPONENT		
		V-DEF		
		CAPACITORS		
C7001	ECA1EFQ121	E.CAPACITOR 25V 120U	1	
C7002	ECUX1H332KBV	C.CAPACITOR CH 50V 3300P	1	
C7003	ECA0JKF121	E.CAPACITOR 6.3V 120U	1	
C7005	ECGC1BA4R7	C.CAPACITOR	1	
C7007	ECUX1E104ZFV	C.CAPACITOR CH 25V 0.001U	1	
C7009	ECUM1C105ZFN	C.CAPACITOR CH 16V 1U	1	
C7010	ECST1CY105Z	T.CAPACITOR 16V 1U	1	
C7011	ECUX1E223KBV	C.CAPACITOR CH 25V 0.022P	1	
C7012	ECUX1E104ZFV	C.CAPACITOR CH 25V 0.001U	1	
C7013	ECUM1C224ZFV	C.CAPACITOR CH 16V 0.22U	1	
C7014	ECST1CX106Z	T.CAPACITOR 16V 10U	1	
C7015	ECUX1H682KBV	C.CAPACITOR CH 50V 6800P	1	
C7016	ECUM1H222JN	C.CAPACITOR CH 50V 2200P	1	
C7017	ECUM1C473KBV	C.CAPACITOR CH 16V 0.047U	1	
C7018	ECUM1C105ZFN	C.CAPACITOR CH 16V 1U	1	
C7019	ECUX1E104ZFV	C.CAPACITOR CH 25V 0.001U	1	
C7020	ECST1CY105Z	T.CAPACITOR 16V 1U	1	
C7021	ECST1CY335Z	T.CAPACITOR 16V 3.3U	1	
C7022	ECUX1H472KBV	C.CAPACITOR CH 50V 4700P	1	
C7023	ECUX1H181JCV	C.CAPACITOR CH 50V 180P	1	
C7024	ECUX1E104ZFV	C.CAPACITOR CH 25V 0.001U	1	
C7025	ECA0JKF121	E.CAPACITOR 6.3V 120U	1	
C7026,27	ECST1CX106Z	T.CAPACITOR 16V 10U	2	
C7028	ECUX1H272KBV	C.CAPACITOR CH 50V 2700P	1	
C7029	ECST1CX106Z	T.CAPACITOR 16V 10U	1	
C7030	ECUX1E104ZFV	C.CAPACITOR CH 25V 0.001U	1	

Ref.No.	Part No.	Part Name & Description	Pcs	Remarks
C7033	ECA1CKF560	E.CAPACITOR 16V 56U	1	
C7035	VCEA1CAP330	E.CAPACITOR 16V 33U	1	
C7036	ECA0JKF121	E.CAPACITOR 6.3V 120U	1	
C7037	ECUM1H222JN	C.CAPACITOR CH 50V 2200P	1	
C7038	VCEA1EAP150	E.CAPACITOR 25V 15U	1	
C7039	ECUX1H221JCV	C.CAPACITOR CH 50V 220P	1	
C7040	ECUX1E104ZFV	C.CAPACITOR CH 25V 0.001U	1	
C7041	VCF0066J223	P.CAPACITOR	1	
C7042	ECA1CKF150	E.CAPACITOR 16V 15U	1	
C7044	ECCF1H331JC	C.CAPACITOR 50V 330P	1	
D7001	MA3180	DIODE	1	<R>
D7002	EC10QS04	DIODE	1	<R>
D7003	MA141K	DIODE	1	<R>
D7004	MA143	DIODE	1	<R>
IC7001	TL5001CPS	IC	1	<R>
IC7002	HA11423MP	IC	1	<R>
IC7003	AN77L09M	IC	1	
L7001	VLQ0177K151	COIL 150UH	1	
L7002-04	VLQ0319N6R8	COIL 6.8UH	3	
P7002	VJP1597T	CONNECTOR (MALE)	1	
P7014	VJP1595T	CONNECTOR (MALE)	1	
P7016	VJP2277	CONNECTOR (MALE)	1	
Q7001	2SD1819A-R	TRANSISTOR	1	<R>
Q7002	2SB1218A-R	TRANSISTOR	1	<R>
Q7003	2SJ278	TRANSISTOR	1	
Q7005	2SD1819A-R	TRANSISTOR	1	<R>
Q7006	2SC3624	TRANSISTOR	1	<R>
Q7007	2SD1819A-R	TRANSISTOR	1	<R>
Q7008	2SA1411	TRANSISTOR	1	<R>
Q7009	2SB1218A-R	TRANSISTOR	1	<R>
Q7010	2SD1819A-R	TRANSISTOR	1	<R>
		RESISTORS		
R7001	ERQ16NK1R0	F.RESISTOR 1W 1.0	1	<!>
R7002	ERJ3GEYJ473	M.RESISTOR CH 3W 47K	1	
R7003	ERJ3GEYJ224	M.RESISTOR CH 3W 220K	1	
R7004,05	ERJ3GEYJ152	M.RESISTOR CH 3W 1.5K	2	
R7006	ERJ3GEYJ393	M.RESISTOR CH 3W 39K	1	
R7007	ERJ3GEYJ101	M.RESISTOR CH 3W 100	1	
R7008	ERJ3GEYJ105	M.RESISTOR CH 3W 1M	1	
R7010	VRE0034E183	M.RESISTOR CH 1/10W 18K	1	
R7011	VRE0034E222	M.RESISTOR CH 1/10W 2.2K	1	
R7013	ERJ3GEYJ822	M.RESISTOR CH 3W 8.2K	1	
R7014	ERJ3GEYJ474	M.RESISTOR CH 3W 470K	1	
R7015	ERJ3GEYJ882	M.RESISTOR CH 3W 8.8K	1	
R7016	ERJ3GEYJ102	M.RESISTOR CH 3W 1K	1	
R7017	ERJ3GEYJ333	M.RESISTOR CH 3W 33K	1	
R7018	ERJ3GEYJ100	M.RESISTOR CH 3W 10	1	
R7019	ERJ3GEYJ183	M.RESISTOR CH 3W 18K	1	
R7020	ERJ3GEYJ121	M.RESISTOR CH 3W 120	1	
R7021	ERJ3GEYJ123	M.RESISTOR CH 3W 12K	1	
R7022	VRE0034E123	M.RESISTOR CH 1/10W 12K	1	
R7023	ERJ3GEYJ683	M.RESISTOR CH 3W 68K	1	
R7024	ERJ3GEYJ822	M.RESISTOR CH 3W 8.2K	1	
R7025	ERJ3GEYJ333	M.RESISTOR CH 3W 33K	1	
R7026	ERJ3GEYJ222	M.RESISTOR CH 3W 2.2K	1	
R7027	ERJ3GEYJ562	M.RESISTOR CH 3W 5.6K	1	
R7028	ERJ3GEYJ682	M.RESISTOR CH 3W 6.8K	1	

Ref.No.	Part No.	Part Name & Description	Pcs	Remarks
R7029	ERJ3GEYJ393	M.RESISTOR CH 3W 39K	1	
R7030	ERJ3GEYJ221	M.RESISTOR CH 3W 220	1	
R7032	VRE0034E103	M.RESISTOR CH 1/10W 10K	1	
R7033	VRE0034E682	M.RESISTOR CH 1/10W 6.8K	1	
R7034	ERJ3GEYJ472	M.RESISTOR CH 3W 4.7K	1	
R7035	ERJ3GEYJ332	M.RESISTOR CH 3W 3.3K	1	
R7036	ERJ3GEYJ4R7	M.RESISTOR CH 3W 4.7	1	
R7037	ERJ3GEYJ562	M.RESISTOR CH 3W 5.6K	1	
R7038	ERJ3GEYJ333	M.RESISTOR CH 3W 33K	1	
R7039	ERJ3GEYJ104	M.RESISTOR CH 3W 100K	1	
R7040	ERJ3GEYJ473	M.RESISTOR CH 3W 47K	1	
R7041	ERJ3GEYJ561	M.RESISTOR CH 3W 560	1	
R7042	ERJ3GEYJ120	M.RESISTOR CH 3W 12	1	
R7043	ERJ3GEYJ102	M.RESISTOR CH 3W 1K	1	
R7044	ERJ3GEYJ121	M.RESISTOR CH 3W 120	1	
R7045,46	ERJ3GEYJ103	M.RESISTOR CH 3W 10K	2	
R7050	ERJ3GEYJ222	M.RESISTOR CH 3W 2.2K	1	
R7051	ERJ3GEYJ102	M.RESISTOR CH 3W 1K	1	
R7052	ERJ3GEYJ222	M.RESISTOR CH 3W 2.2K	1	
R7053	ERJ3GEYJ512	M.RESISTOR CH 3W 5.1K	1	
VR7001	EVM7JGA00B52	V.RESISTOR	1	
VR7002	EVM7JGA00B53	V.RESISTOR	1	
VR7003	EVM7JGA00B52	V.RESISTOR	1	
VR7004	EVM7JGA00B22	V.RESISTOR	1	
VR7005	VRV0113B500	V.RESISTOR 50K	1	
VR7006	EVM7JGA00B53	V.RESISTOR	1	
**********	VEP27088A	P.C.BOARD W/COMPONENT		
		EVF VIDEO		
P7003	VJP3450	CONNECTOR (MALE)	1	
P7005	VJP3450	CONNECTOR (MALE)	1	
P7008	VJP1599T	CONNECTOR (MALE)	1	
P7009	VJP1600T	CONNECTOR (MALE)	1	
Q7201	2SB1218A-R	TRANSISTOR	1	<R>
QR7202-05	UN5214	TRANSISTOR-RESISTOR	4	
		RESISTORS		
R7201	ERJ3GEYJ472	M.RESISTOR CH 3W 4.7K	1	
R7202	ERJ3GEYJ682	M.RESISTOR CH 3W 6.8K	1	
R7203	ERJ3GEYJ271	M.RESISTOR CH 3W 270	1	
R7204	ERJ3GEYJ152	M.RESISTOR CH 3W 1.5K	1	
R7205-09	ERJ3GEYJ562	M.RESISTOR CH 3W 5.6K	5	

Ref.No.	Part No.	Part Name & Description	Pcs	Remarks
**********	VEP27089A	P.C.BOARD W/COMPONENT		
		FRONT		
		CAPACITORS		
C7301	ECEA1HGE470	E.CAPACITOR 50V 47U	1	
C7302,03	ECST1AC226Z	T.CAPACITOR 10V 22U	2	
C7304	ECUM1C105ZFN	C.CAPACITOR CH 16V 1U	1	
C7305	ECST1AC226Z	T.CAPACITOR 10V 22U	1	
C7306	ECUX1H330JCV	C.CAPACITOR CH 50V 33P	1	
C7307	ECUX1H101JCV	C.CAPACITOR CH 50V 100P	1	
C7309,10	ECUX1E104ZFV	C.CAPACITOR CH 25V 0.001U	2	
C7313	ECUX1H330JCV	C.CAPACITOR CH 50V 33P	1	
C7314	ECUX1H221JCV	C.CAPACITOR CH 50V 220P	1	
C7315,16	ECUX1E104ZFV	C.CAPACITOR CH 25V 0.001U	2	
C7317	ECA0JKF560	E.CAPACITOR 6.3V 56U	1	
D7301,02	MA3047	DIODE	2	<R>
D7303,04	EBR5504S	DIODE	2	<R>
D7307	E562	DIODE	1	<R>
D7308	MA143	DIODE	1	<R>
DL7301	VLD0259	DELAY	1	
IC7301	TC7S04F	IC	1	<R>
IC7302	TC7S32F	IC	1	<R>
P7004	VJP2315	CONNECTOR (MALE)	1	
P7015	VJP1606T	CONNECTOR (MALE)	1	
Q7301-04	2SD1819A-R	TRANSISTOR	4	<R>
Q7305	2SC3624	TRANSISTOR	1	<R>
Q7306	2SA1411	TRANSISTOR	1	<R>
Q7307	2SB1218A-R	TRANSISTOR	1	<R>
Q7308	2SK316-Q	TRANSISTOR	1	<R>
Q7309	2SB1218A-R	TRANSISTOR	1	<R>
Q7310	2SD1821-R	TRANSISTOR	1	<R>
Q7311	2SC4181	TRANSISTOR	1	<R>
Q7312	2SD1819A-R	TRANSISTOR	1	<R>
		RESISTORS		
R7301	ERJ3GEYJ103	M.RESISTOR CH 3W 10K	1	
R7302	ERJ3GEYJ203	M.RESISTOR CH 3W 20K	1	
R7303	ERJ3GEYJ104	M.RESISTOR CH 3W 100K	1	
R7304	ERJ3GEYJ181	M.RESISTOR CH 3W 180	1	
R7305,06	ERJ3GEYJ473	M.RESISTOR CH 3W 47K	2	
R7307	ERJ3GEYJ101	M.RESISTOR CH 3W 100	1	
R7308	ERJ3GEYJ472	M.RESISTOR CH 3W 4.7K	1	
R7309	ERJ3GEYJ101	M.RESISTOR CH 3W 100	1	
R7310	ERJ3GEYJ104	M.RESISTOR CH 3W 100K	1	
R7311	ERJ3GEYJ333	M.RESISTOR CH 3W 33K	1	
R7312	ERJ3GEYJ103	M.RESISTOR CH 3W 10K	1	
R7313	ERJ3GEYJ332	M.RESISTOR CH 3W 3.3K	1	
R7314	ERJ3GEYG224	M.RESISTOR CH 3W 220K	1	
R7315	VRE0034E913	M.RESISTOR CH 1/10W 91K	1	
R7316	VRE0034E223	M.RESISTOR CH 1/10W 22K	1	
R7317	ERJ6GEY0R00	M.RESISTOR CH 1/10W 0	1	

Ref.No.	Part No.	Part Name & Description	Pcs	Remarks
R7318	ERJ3GEY0R00	M.RESISTOR CH 1/16W 0	1	
R7321	ERJ3GEYJ101	M.RESISTOR CH 3W 100	1	
R7322-24	VRE0034E102	M.RESISTOR CH 1/10W 1K	3	
R7325	ERJ3GEYJ391	M.RESISTOR CH 3W 390	1	
R7326	VRE0034E222	M.RESISTOR CH 1/10W 2.2K	1	
R7327	ERJ3GEYJ184	M.RESISTOR CH 3W 180K	1	
R7328	ERJ3GEYJ154	M.RESISTOR CH 3W 150K	1	
R7329	VRE0034E682	M.RESISTOR CH 1/10W 6.8K	1	
R7330	VRE0034E222	M.RESISTOR CH 1/10W 2.2K	1	
R7331	ERJ3GEYJ101	M.RESISTOR CH 3W 100	1	
R7332,33	VRE0034E562	M.RESISTOR CH 1/10W 5.6K	2	
R7335	ECUX1H0R5CCV	C.CAPACITOR CH 50V 0.5U	1	
R7336	ERJ3GEYG473	M.RESISTOR CH 3W 47K	1	
R7338	ERJ3GEY0R00	M.RESISTOR CH 1/16W 0	1	
R7339	ERJ3GEYJ104	M.RESISTOR CH 3W 100K	1	
R7341	ERJ3GEYJ104	M.RESISTOR CH 3W 100K	1	
R7342	ERJ3GEYJ103	M.RESISTOR CH 3W 10K	1	
R7345	ERJ3GEYJ103	M.RESISTOR CH 3W 10K	1	
R7347	ER0S2CKG2701	M.RESISTOR 1/4W 2.7K	1	
R7348	ER0S2CKG4702	M.RESISTOR 1/4W 47K	1	
SW7301-03	VSS0186	SWITCH	3	<R>
VR7301	EVUFNAE03B13	V.RESISTOR	1	
VR7302	EVUFNAE03B55	V.RESISTOR	1	
VR7303	EVUFNAE03B15	V.RESISTOR	1	
		MISCELLANEOUS		
	VMX1658	SPACER	2	
**********	VEP27090A	P.C.BOARD W/COMPONENT		
		CRT MASK		
D501	BG2232S	DIODE	1	<R>
D502-05	AY2232S	DIODE	4	<R>
D506	PR2232S	DIODE	1	<R>
		MISCELLANEOUS		
E40	VJF0900	CRT HOLDER	1	
E41	XTN2+4G	SCREW	2	
**********	VEP01585B	P.C.BOARD W/COMPONENT		
		JACK		
		CAPACITORS		
C1001	ECA1CM102	E.CAPACITOR 16V 1000U	1	
C1002,03	ECUM1H471JCN	C.CAPACITOR CH 50V 470P	2	

Ref.No.	Part No.	Part Name & Description	Pcs	Remarks
C1004,05	ECHU1H1C3JB5	C.CAPACITOR 50V 0.01U	2	
C1006,07	ECHU1H1C4JB9	C.CAPACITOR 50V 0.1U	2	
C1008,09	ECUM1H471JCN	C.CAPACITOR CH 50V 470P	2	
C1010	ECHU1H1C3JB5	C.CAPACITOR 50V 0.01U	1	
C1012	ECHU1H1C3JB5	C.CAPACITOR 50V 0.01U	1	
C1014,15	ECUM1H471JCN	C.CAPACITOR CH 50V 470P	2	
C1016,17	ECHU1H1C3JB5	C.CAPACITOR 50V 0.01U	2	
C1018,19	ECHU1H1C4JB9	C.CAPACITOR 50V 0.1U	2	
C1020-23	ECEV1CV100Q	E.CAPACITOR 16V 10U	4	
C1024	ECA1EFQ560	E.CAPACITOR 25V 56U	1	
C1025	ECEV1HV3R3Q	E.CAPACITOR 50V 3.3U	1	
C1026	ECA1JFQ820	E.CAPACITOR 63V 82U	1	
C1027	ECEV0JV330Q	E.CAPACITOR 6.3V 33U	1	
C1028,29	ECUM1H330JCN	C.CAPACITOR CH 50V 33P	2	
C1030	ECUM1H103KBN	C.CAPACITOR CH 50V 0.01U	1	
C1031,32	ECUM1C105ZFN	C.CAPACITOR CH 16V 1U	2	
C1033	ECEV0JV101Q	E.CAPACITOR 6.3V 100U	1	
C1034-36	ECUM1E104ZFN	C.CAPACITOR CH 25V 0.1U	3	
C1037	ECA0JM102	E.CAPACITOR 6.3V 1000U	1	
C1039	ECUM1H104KBM	C.CAPACITOR CH 50V 0.1U	1	
C1040	ECA1JFQ220	E.CAPACITOR 63V 22U	1	
C1041-44	ECHU1H104JB9	C.CAPACITOR 50V 0.1U	4	
C1045	ECEV1CV100Q	E.CAPACITOR 16V 10U	1	
CP1001	VSQ0834	PROTECTOR	1	<!>
D1001,02	MA151K	DIODE	2	
D1003-08	MA153	DIODE	6	
D1009	E10QS10	DIODE	1	
D1010	MA151K	DIODE	1	
D1011-13	MA153	DIODE	3	
D1014	RK34	DIODE	1	
D1015	MA720	DIODE	1	
D1016	MA151K	DIODE	1	
IC1001	UPC5022GA089	IC	1	
IC1002	LM2577MX-ADJ	IC	1	
IC1003	M50927841FP	IC	1	
IC1004	MN12821R	IC	1	
IC1005	MC74HCU04F	IC	1	
IC1006	MC74HC4066F	IC	1	
IC1007	UPC4558G2	IC	1	
L1001-06	VLQ0163J100	COIL 10UH	6	
L1008,09	VLQ0407680K	COIL 68UH	2	
P1010	VJS2907B026	CONNECTOR (FEMALE)	1	
P1011	VJP3125D015	CONNECTOR (MALE)	1	
P1012	VJP1604T	CONNECTOR (MALE)	1	
P1013	VJP1242T	CONNECTOR (MALE)	1	
P1014	VJP1244T	CONNECTOR (MALE)	1	
P1015	VJP1243T	CONNECTOR (MALE)	1	
P1016	VJP1229T	CONNECTOR (MALE)	1	
P1017	VJP1608T	CONNECTOR (MALE)	1	
P1018,19	VJP1607T	CONNECTOR (MALE)	2	
P1020	VJP1242T	CONNECTOR (MALE)	1	
P1021,22	VJS3551	CONNECTOR (FEMALE)	2	
Q1001,02	2SB792-R	TRANSISTOR	2	
Q1003	2SB970X	TRANSISTOR	1	
Q1004	2SJ245S-R	TRANSISTOR	1	
Q1005	2SD601A-R	TRANSISTOR	1	

Ref.No.	Part No.	Part Name & Description	Pcs	Remarks
QR1001	UN2113	TRANSISTOR-RESISTOR	1	
QR1002	UN221F	TRANSISTOR-RESISTOR	1	
QR1003	UN2113	TRANSISTOR-RESISTOR	1	
QR1004	UN221F	TRANSISTOR-RESISTOR	1	
QR1005,06	UN2113	TRANSISTOR-RESISTOR	2	
QR1007,08	UN2213	TRANSISTOR-RESISTOR	2	
		RESISTORS		
R1001-03	ERJ6GEYJ682	M.RESISTOR CH1/16W 6.8K	3	
R1004,05	VRE0034E562	M.RESISTOR CH 1/10W 5.6K	2	
R1006	ERJ6GEY0R00	M.RESISTOR CH1/16W 0.00	1	
R1007	VRE0034E221	M.RESISTOR CH 1/10W 220	1	
R1008-13	ERJ6GEYJ682	M.RESISTOR CH1/16W 6.8K	6	
R1014,15	VRE0034E562	M.RESISTOR CH 1/10W 5.6K	2	
R1016	ERJ6GEY0R00	M.RESISTOR CH1/16W 0.00	1	
R1017	VRE0034E221	M.RESISTOR CH 1/10W 220	1	
R1019	ERJ6GEY0R00	M.RESISTOR CH1/16W 0.00	1	
R1021	ERJ6GEY0R00	M.RESISTOR CH1/16W 0.00	1	
R1024	ERJ6GEY0R00	M.RESISTOR CH1/16W 0.00	1	
R1026	ERJ6GEY0R00	M.RESISTOR CH1/16W 0.00	1	
R1028	ERJ6GEYK1R0	M.RESISTOR CH1/16W 1.0	1	
R1029,30	ERJ6GEYJ471	M.RESISTOR CH1/16W 470	2	
R1031,32	ERJ6GEYJ104	M.RESISTOR CH1/16W 100K	2	
R1033	ERJ6GEYJ100	M.RESISTOR CH1/16W 10	1	
R1034,35	ERJ6GEYJ473	M.RESISTOR CH1/16W 47K	2	
R1036	ERJ6GEYJ104	M.RESISTOR CH1/16W 100K	1	
R1037	ERJ6GEYJ103	M.RESISTOR CH1/16W 10K	1	
R1038	ERJ6GEYJ473	M.RESISTOR CH1/16W 47K	1	
R1039	ERJ6GEYJ332	M.RESISTOR CH1/16W 3.3K	1	
R1040	ERJ6GEYJ681	M.RESISTOR CH1/16W 680	1	
R1041	VRE0034E683	M.RESISTOR CH 1/10W 68K	1	
R1042	VRE0034E182	M.RESISTOR CH 1/10W 1.8K	1	
R1043	ERJ6GEYJ104	M.RESISTOR CH1/16W 100K	1	
R1044,45	ERJ6GEYJ223	M.RESISTOR CH1/16W 22K	2	
R1046	ERJ6GEYJ471	M.RESISTOR CH1/16W 470	1	
R1047	ERJ6GEYJ102	M.RESISTOR CH1/16W 1K	1	
R1048	ERJ6GEYJ104	M.RESISTOR CH1/16W 100K	1	
R1049	ERJ6GEYJ105	M.RESISTOR CH1/16W 1M	1	
R1050	ERJ6GEY0R00	M.RESISTOR CH1/16W 0.00	1	
R1051,52	ERJ6GEYJ101	M.RESISTOR CH1/16W 100	2	
R1053	ERJ6GEYJ104	M.RESISTOR CH1/16W 100K	1	
R1054	ERJ6GEYJ155	M.RESISTOR CH1/16W 1.5M	1	
R1055	ERJ6GEYJ104	M.RESISTOR CH1/16W 100K	1	
R1056	ERJ6GEYJ155	M.RESISTOR CH1/16W 1.5M	1	
R1057-67	ERJ6GEYJ104	M.RESISTOR CH1/16W 100K	11	
R1068-70	ERJ6GEYJ101	M.RESISTOR CH1/16W 100	3	
R1071	ERJ6GEYJ103	M.RESISTOR CH1/16W 10K	1	
R1072	ERJ6GEYJ222	M.RESISTOR CH1/16W 2.2K	1	
R1073	VSF0092	MICRO FUSE	1	
R1074	ERJ6GEYJ103	M.RESISTOR CH1/16W 10K	1	
R1075	ERJ6GEYG680	M.RESISTOR CH1/16W 68	1	
R1076,77	ERJ6GEYJ103	M.RESISTOR CH1/16W 10K	2	
R1078	ERJ6GEYJ390	M.RESISTOR CH1/16W 39	1	
R1079	ERJ8GCYJ101	M.RESISTOR CH 1/8W 100	1	
R1082,83	ERJ6GEYJ184	M.RESISTOR CH1/16W 180K	2	
R1084-86	ERJ6GEYJ103	M.RESISTOR CH1/16W 10K	3	
R1087	ERJ6GEYJ472	M.RESISTOR CH1/16W 4.7K	1	
R1088	ERJ6GEYJ103	M.RESISTOR CH1/16W 10K	1	
RY1001,02	VSY2036	RELAY	2	
SW1001	VJP3579B006B	CONNECTOR (MALE)	1	
X1001	VSX0128	CRYSTAL OSCILLATOR	1	

Ref.No.	Part No.	Part Name & Description	Pcs	Remarks
		MISCELLANEOUS		
	VMP3789	P.C.BOARD HOLDER ANGLE	1	
	XYN26+K6	SCREW	1	
	VJS1940	CONNECTOR	2	
**********	VEP00U24A	P.C.BOARD W/COMPONENT AV JACK		
		CAPACITORS		
C9701-04	ECEA0GKA471	E.CAPACITOR 470U	4	
J3	VJS3154	CONNECTOR (FEMALE)	1	
J4	VJS3155	CONNECTOR (FEMALE)	1	
J5	VJJ0323	RCA PIN JACK	1	
L9701,02	VLP0083	COIL	2	
P9700	VJP1610T	CONNECTOR (MALE)	1	
P9701	VJP1607T	CONNECTOR (MALE)	1	
		RESISTORS		
R9701	ERDS2TJ750	C.RESISTOR 1/4W 75	1	
R9702	ERDS2TJ152	C.RESISTOR 1/4W 1.5K	1	
R9703	ERDS2TJ750	C.RESISTOR 1/4W 75	1	
R9704	ERDS2TJ152	C.RESISTOR 1/4W 1.5K	1	
R9705	ERDS2TJ560	C.RESISTOR 1/4W 56	1	
**********	VEP00U51A	P.C.BOARD W/COMPONENT DC INPUT		
D1	S3V40	DIODE	1	<R>
		MISCELLANEOUS		
	VJP2717	CONNECTOR (MALE)	1	

Ref.No.	Part No.	Part Name & Description	Pcs	Remarks
**********	VEP01584B	P.C.BOARD W/COMPONENT		
		POWER		
		CAPACITORS		
C1001	ECUX1E104ZFV	C.CAPACITOR CH 25V 0.001U	1	
C1002	ECEV1HV3R3Q	E.CAPACITOR 50V 3.3U	1	
C1003	ECUX1H121JCV	C.CAPACITOR CH 50V 120P	1	
C1004	ECUM1E104KBN	C.CAPACITOR CH 25V 0.1U	1	
C1005	ECUX1H471JCV	C.CAPACITOR CH 50V 470P	1	
C1007	ECUX1H471JCV	C.CAPACITOR CH 50V 470P	1	
C1008	ECUM1E104KBN	C.CAPACITOR CH 25V 0.1U	1	
C1009,10	ECUX1H102JV	C.CAPACITOR CH 50V 1000P	2	
C1011	ECA1EFQ121	E.CAPACITOR 25V 120U	1	
C1012	ECUX1H102JV	C.CAPACITOR CH 50V 1000P	1	
C1013	ECUX1H471JCV	C.CAPACITOR CH 50V 470P	1	
C1014	ECUM1E104KBN	C.CAPACITOR CH 25V 0.1U	1	
C1015	ECUX1H681JV	C.CAPACITOR CH 50V 680P	1	
C1016	ECA1EFQ121	E.CAPACITOR 25V 120U	1	
C1018	ECUX1E104ZFV	C.CAPACITOR CH 25V 0.001U	1	
C1020	ECUX1E104ZFV	C.CAPACITOR CH 25V 0.001U	1	
C1022	ECUX1E104ZFV	C.CAPACITOR CH 25V 0.001U	1	
C1024	ECA1EFQ121	E.CAPACITOR 25V 120U	1	
C1025	ECUX1H681JV	C.CAPACITOR CH 50V 680P	1	
C1027	ECUX1E104ZFV	C.CAPACITOR CH 25V 0.001U	1	
C1032	ECA1EFQ121	E.CAPACITOR 25V 120U	1	
C1034	ECUX1H471JCV	C.CAPACITOR CH 50V 470P	1	
C1035	ECA1EFQ121	E.CAPACITOR 25V 120U	1	
C1037,38	ECUX1E104ZFV	C.CAPACITOR CH 25V 0.001U	2	
C1039	ECEV1HV3R3Q	E.CAPACITOR 50V 3.3U	1	
C1040	ECEV1HV010	E.CAPACITOR 50V 1U	1	
C1042	ECUM1C474KBM	C.CAPACITOR CH 16V 0.47U	1	
C1043	ECUM1E104KBN	C.CAPACITOR CH 25V 0.1U	1	
C1044,45	ECUX1H471JCV	C.CAPACITOR CH 50V 470P	2	
C1046	ECUM1E104KBN	C.CAPACITOR CH 25V 0.1U	1	
C1047,48	ECUX1H102JV	C.CAPACITOR CH 50V 1000P	2	
C1049	ECUX1H471JCV	C.CAPACITOR CH 50V 470P	1	
C1050	ECUM1E104KBN	C.CAPACITOR CH 25V 0.1U	1	
C1051	ECUX1H102JV	C.CAPACITOR CH 50V 1000P	1	
C1052	ECA1EFQ121	E.CAPACITOR 25V 120U	1	
C1053	ECUX1H681JV	C.CAPACITOR CH 50V 680P	1	
C1060	ECA1EFQ121	E.CAPACITOR 25V 120U	1	
C1061	ECUX1H681JV	C.CAPACITOR CH 50V 680P	1	
C1062	ECA1EFQ121	E.CAPACITOR 25V 120U	1	
C1063	ECUX1E104ZFV	C.CAPACITOR CH 25V 0.001U	1	
C1070	ECUX1H222KBV	C.CAPACITOR CH 50V 2200P	1	
C1071	ECA1EFQ121	E.CAPACITOR 25V 120U	1	
C1073	ECUX1H471JCV	C.CAPACITOR CH 50V 470P	1	
C1074	ECA1EFQ221	E.CAPACITOR 25V 220U	1	
C1075	ECUX1E104ZFV	C.CAPACITOR CH 25V 0.001U	1	
C1092	ECUX1E104ZFV	C.CAPACITOR CH 25V 0.001U	1	
C1098	ECA1EFQ121	E.CAPACITOR 25V 120U	1	
C1101	ECUX1E104ZFV	C.CAPACITOR CH 25V 0.001U	1	
C1102	VCEA1DAP101	E.CAPACITOR 20V 100U	1	
C1106	ECUX1E104ZFV	C.CAPACITOR CH 25V 0.001U	1	
C1107	ECUM1C474KBM	C.CAPACITOR CH 16V 0.47U	1	
C1109	ECA1EFQ121	E.CAPACITOR 25V 120U	1	
C1127	ECEV1HV010	E.CAPACITOR 50V 1U	1	
C1128	ECA1EFQ121	E.CAPACITOR 25V 120U	1	
C1131	ECA1EFQ121	E.CAPACITOR 25V 120U	1	
C1133	ECA1EFQ121	E.CAPACITOR 25V 120U	1	
C1135,36	ECA1EFQ121	E.CAPACITOR 25V 120U	2	
C1138	ECA1EFQ221	E.CAPACITOR 25V 220U	1	
C1139	ECUX1E104ZFV	C.CAPACITOR CH 25V 0.001U	1	
C1140-42	VCEA1DAP101	E.CAPACITOR 20V 100U	3	
C2001	ECUM1C105KBM	C.CAPACITOR CH 16V 1U	1	
C2002	ECUX1H222KBV	C.CAPACITOR CH 50V 2200P	1	
C2003	ECEV1CV100	E.CAPACITOR 16V 10U	1	
C2004	ECUM1H223KBN	C.CAPACITOR CH 50V 0.022U	1	

Ref.No.	Part No.	Part Name & Description	Pcs	Remarks
C2005	ECUM1C105KBM	C.CAPACITOR CH 16V 1U	1	
C2006	ECUX1H103KBV	C.CAPACITOR CH 50V 0.01P	1	
C2007	ECUM1E104KBN	C.CAPACITOR CH 25V 0.1U	1	
C2008	ECEV0JV470	E.CAPACITOR 6.3V 47U	1	
C2009	ECUM1C334KBM	C.CAPACITOR CH 16V 0.33U	1	
C2010	ECUX1H182KBV	C.CAPACITOR CH 50V 1800P	1	
C2014-16	ECUM1E104KBN	C.CAPACITOR CH 25V 0.1U	3	
C2017	ECUM1H333KBN	C.CAPACITOR CH 50V 0.033U	1	
C2018	ECUM1C105KBM	C.CAPACITOR CH 16V 1U	1	
C2019	ECEV0JV470	E.CAPACITOR 6.3V 47U	1	
C2020	ECUM1E105ZFM	C.CAPACITOR CH 25V 1U	1	
C2021	ECEV0JV470	E.CAPACITOR 6.3V 47U	1	
C2022	ECUX1E104ZFV	C.CAPACITOR CH 25V 0.001U	1	
C2023-25	ECEV1HNR47	E.CAPACITOR 50V 0.47U	3	
C2026	ECUM1E104KBN	C.CAPACITOR CH 25V 0.1U	1	
C2027	ECEV1HVR47	E.CAPACITOR 50V 0.47U	1	
C2028-30	ECUX1H103KBV	C.CAPACITOR CH 50V 0.01P	3	
C2031	ECUX1E104ZFV	C.CAPACITOR CH 25V 0.001U	1	
C2032	ECEV1EV330	E.CAPACITOR 25V 33U	1	
C2033,34	ECUX1E104ZFV	C.CAPACITOR CH 25V 0.001U	2	
C2035	ECUX1H103KBV	C.CAPACITOR CH 50V 0.01P	1	
C2036	ECEV1HV4R7	E.CAPACITOR 50V 4.7U	1	
C2037	ECUM1E473KBN	C.CAPACITOR CH 25V 0.047U	1	
C2038,39	ECUX1H561JCV	C.CAPACITOR CH 50V 560P	2	
C2040	ECUM1E104KBN	C.CAPACITOR CH 25V 0.1U	1	
C2041	ECUX1H103KBV	C.CAPACITOR CH 50V 0.01P	1	
C2042	ECUX1E104ZFV	C.CAPACITOR CH 25V 0.001U	1	
C2043	VCCC0037F432	C.CAPACITOR	1	
C2044	ECUX1H103KBV	C.CAPACITOR CH 50V 0.01P	1	
C2047	ECEV1EV330	E.CAPACITOR 25V 33U	1	
C2048,49	ECUX1E104ZFV	C.CAPACITOR CH 25V 0.001U	2	
C2050	ECUM1C105KBM	C.CAPACITOR CH 16V 1U	1	
C2052	ECUM1E105ZFM	C.CAPACITOR CH 25V 1U	1	
C2053	ECA1EFQ121	E.CAPACITOR 25V 120U	1	
C2055	ECA1EFQ121	E.CAPACITOR 25V 120U	1	
C2056	ECUM1E105ZFM	C.CAPACITOR CH 25V 1U	1	
C2057	ECUX1H182KBV	C.CAPACITOR CH 50V 1800P	1	
C2059	ECUM1E105ZFM	C.CAPACITOR CH 25V 1U	1	
C2060	ECA1EFQ121	E.CAPACITOR 25V 120U	1	
C2061	ECUM1E105ZFM	C.CAPACITOR CH 25V 1U	1	
C2062	ECA1EFQ121	E.CAPACITOR 25V 120U	1	
C2064,65	ECUM1C105KBM	C.CAPACITOR CH 16V 1U	2	
C2066,67	ECUX1H471JCV	C.CAPACITOR CH 50V 470P	2	
C2069	ECUX1H471JCV	C.CAPACITOR CH 50V 470P	1	
C2070	ECUX1H102JV	C.CAPACITOR CH 50V 1000P	1	
C2071	ECUM1E104KBN	C.CAPACITOR CH 25V 0.1U	1	
C2072	ECUX1H121JCV	C.CAPACITOR CH 50V 120P	1	
C2073-75	ECUX1H102JV	C.CAPACITOR CH 50V 1000P	3	
C2076	ECUM1H333KBN	C.CAPACITOR CH 50V 0.033U	1	
C2077	ECUX1H103KBV	C.CAPACITOR CH 50V 0.01P	1	
C2078-80	ECUM1E104KBN	C.CAPACITOR CH 25V 0.1U	3	
D1003	MA143	DIODE	1	<R>
D1006,07	MA3200-M	DIODE	2	<R>
D1008,09	MA736	DIODE	2	<R>
D1016	MA143	DIODE	1	<R>
D1017,18	MA736	DIODE	2	<R>
D1028,29	MA736	DIODE	2	<R>
D1034,35	MA736	DIODE	2	<R>
D2001	MA3062M	DIODE	1	<R>
D2002	MA143	DIODE	1	<R>
D2003	MA3100	DIODE	1	<R>
D2010	MA728	DIODE	1	<R>
D2011,12	MA736	DIODE	2	<R>
D2013	MA728	DIODE	1	<R>
IC1001,02	BA9703K	IC	2	<R>
IC2001	AN3893NFHP	IC	1	<R>
IC2002	UN224	IC	1	<R>
IC2003	AN3841SR	IC	1	<R>
IC2004	BA6219BFPY	IC	1	<R>

Ref.No.	Part No.	Part Name & Description	Pcs	Remarks
IC2005	TL1451CNS	IC	1	<R>
IC2006	UPC4558G2	IC	1	<R>
IC2007	UPC393G2	IC	1	<R>
IC2008	UPC4558G2	IC	1	<R>
IC2009	UPC393G2	IC	1	<R>
IC2010	UPC4558G2	IC	1	<R>
L1001	VLQ0407120M	COIL 12UH	1	
L1002	VLQ0622	COIL	1	
L1005-08	VLQ040768OK	COIL 68UH	4	
L1009	VLQ0622	COIL	1	
L1014	VLQ040768OK	COIL 68UH	1	
L1015	VLQ0621	COIL	1	
L1017,18	VLQ040768OK	COIL 68UH	2	
L1023	VLQ0621	COIL	1	
L1024	VLQ040768OK	COIL 68UH	1	
L1029	VLQ040768OK	COIL 68UH	1	
L1037	VLQ0621	COIL	1	
L1042	VLQ040768OK	COIL 68UH	1	
L1043,44	VLQ0319K680	COIL 68UH	2	
L1045	VLQ0319K470	COIL 47UH	1	
L2001	VLQ0407120M	COIL 12UH	1	
L2002	VLQ0129	COIL	1	
L2004	VLQ0407151K	COIL 150UH	1	
P1001,02	VJS2889A025	CONNECTOR (FEMALE)	2	
P1003	VJP1229T	CONNECTOR (MALE)	1	
P2001	VJS2117	CONNECTOR (FEMALE)	1	
P2002	VJS2889A022	CONNECTOR (FEMALE)	1	
Q1001,02	2SB1202-S	TRANSISTOR	2	<R>
Q1004-06	2SJ245S	TRANSISTOR	3	
Q1008	2SK1059-Z	TRANSISTOR	1	<R>
Q1010,11	2SJ245S	TRANSISTOR	2	
Q1012	2SD1820A-R	TRANSISTOR	1	<R>
Q1014	2SD1820A-R	TRANSISTOR	1	<R>
Q1015	2SB1219A-R	TRANSISTOR	1	<R>
Q1016	2SD1820A-R	TRANSISTOR	1	<R>
Q1017	2SB1219A-R	TRANSISTOR	1	<R>
Q1018	2SD1820A-R	TRANSISTOR	1	<R>
Q1019	2SB1219A-R	TRANSISTOR	1	<R>
Q1020	2SD1820A-R	TRANSISTOR	1	<R>
Q1021	2SB1219A-R	TRANSISTOR	1	<R>
Q2002	2SD1819A-R	TRANSISTOR	1	<R>
Q2003,04	2SB1073-R	TRANSISTOR	2	<R>
QR1005,06	XN1501	TRANSISTOR-RESISTOR	2	<R>
QR1010	UN5211	TRANSISTOR-RESISTOR	1	<R>
QR2001	UN5211	TRANSISTOR-RESISTOR	1	<R>
QR2002	UN5111	TRANSISTOR-RESISTOR	1	
		RESISTORS		
R1001	VRE0034E393	M.RESISTOR CH 1/10W 39K	1	
R1002	VRE0034E183	M.RESISTOR CH 1/10W 18K	1	
R1003	ERJ3GEYJ470	M.RESISTOR CH 3W 47	1	
R1004,05	VRE0034E182	M.RESISTOR CH 1/10W 1.8K	2	
R1006	VRE0034E473	M.RESISTOR CH 1/10W 47K	1	
R1007	ERJ3GEYJ102	M.RESISTOR CH 3W 1K	1	
R1008	ERJ3GEYJ151	M.RESISTOR CH 3W 150	1	
R1009	ERJ3GEYJ102	M.RESISTOR CH 3W 1K	1	
R1010	ERJ3GEYJ151	M.RESISTOR CH 3W 150	1	
R1011,12	ERJ3GEYJ470	M.RESISTOR CH 3W 47	2	
R1014	ERJ3GEYJ123	M.RESISTOR CH 3W 12K	1	
R1015	ERJ3GEYJ223	M.RESISTOR CH 3W 22K	1	
R1016	ERJ3GEYJ123	M.RESISTOR CH 3W 12K	1	

Ref.No.	Part No.	Part Name & Description	Pcs	Remarks
R1017	ERJ3GEYJ473	M.RESISTOR CH 3W 47K	1	
R1018	VRE0034E563	M.RESISTOR CH 1/10W 56K	1	
R1019	VRE0034E822	M.RESISTOR CH 1/10W 8.2K	1	
R1020	VRE0034E472	M.RESISTOR CH 1/10W 4.7K	1	
R1021	VRE0034E182	M.RESISTOR CH 1/10W 1.8K	1	
R1024	ERJ3GEYJ103	M.RESISTOR CH 3W 10K	1	
R1025	VRE0034E393	M.RESISTOR CH 1/10W 39K	1	
R1026	VRE0034E183	M.RESISTOR CH 1/10W 18K	1	
R1027	ERJ3GEYJ103	M.RESISTOR CH 3W 10K	1	
R1028,29	VRE0034E182	M.RESISTOR CH 1/10W 1.8K	2	
R1031	ERJ3GEYJ102	M.RESISTOR CH 3W 1K	1	
R1032	ERJ3GEYJ151	M.RESISTOR CH 3W 150	1	
R1033	ERJ3GEYJ102	M.RESISTOR CH 3W 1K	1	
R1034	ERJ3GEYJ151	M.RESISTOR CH 3W 150	1	
R1035,36	ERJ3GEYJ681	M.RESISTOR CH 3W 680	2	
R1038	ERJ3GEYJ332	M.RESISTOR CH 3W 3.3K	1	
R1039	ERJ3GEYJ223	M.RESISTOR CH 3W 22K	1	
R1040	ERJ3GEYJ123	M.RESISTOR CH 3W 12K	1	
R1041	ERJ3GEYJ473	M.RESISTOR CH 3W 47K	1	
R1042	VRE0034E123	M.RESISTOR CH 1/10W 12K	1	
R1043	VRE0034E332	M.RESISTOR CH 1/10W 3.3K	1	
R1044	VRE0034E153	M.RESISTOR CH 1/10W 15K	1	
R1045	VRE0034E332	M.RESISTOR CH 1/10W 3.3K	1	
R1047	ERJ12YJ472	M.RESISTOR 1/2W 4.7K	1	
R1048	VRE0034E683	M.RESISTOR CH 1/10W 68K	1	
R1049	VRE0034E472	M.RESISTOR CH 1/10W 4.7K	1	
R1060	ERJ3GEYJ101	M.RESISTOR CH 3W 100	1	
R1061	ERJ3GEYJ332	M.RESISTOR CH 3W 3.3K	1	
R1063	ERJ3GEYJ680	M.RESISTOR CH 3W 68	1	
R1074	ERJ3GEYJ103	M.RESISTOR CH 3W 10K	1	
R1076	VRE0034E153	M.RESISTOR CH 1/10W 15K	1	
R1077	VRE0034E332	M.RESISTOR CH 1/10W 3.3K	1	
R1078,79	ERJ3GEYJ102	M.RESISTOR CH 3W 1K	2	
R1084	ERJ3GEYJ470	M.RESISTOR CH 3W 47	1	
R1088,89	ERJ3GEY0R00	M.RESISTOR CH 1/16W 0	2	
R1101	ERJ12YJ472	M.RESISTOR 1/2W 4.7K	1	
R1102	ERJ3GEYJ101	M.RESISTOR CH 3W 100	1	
R1113,14	ERJ3GEYJ332	M.RESISTOR CH 3W 3.3K	2	
R1115-17	ERJ3GEYJ101	M.RESISTOR CH 3W 100	3	
R1118	ERJ3GEYJ332	M.RESISTOR CH 3W 3.3K	1	
R1119	ERJ3GEYJ103	M.RESISTOR CH 3W 10K	1	
R1120,21	ERJ3GEYJ151	M.RESISTOR CH 3W 150	2	
R1126-28	ERJ3GEYJ154	M.RESISTOR CH 3W 150K	3	
R1129	ERJ3GEYJ222	M.RESISTOR CH 3W 2.2K	1	
R1137	ERDS2TJ472	C.RESISTOR 1/4W 4.7K	1	
R2001	ERJ3GEYJ222	M.RESISTOR CH 3W 2.2K	1	
R2002	ERJ3GEYJ154	M.RESISTOR CH 3W 150K	1	
R2003	ERJ3GEYJ332	M.RESISTOR CH 3W 3.3K	1	
R2004	ERJ3GEYJ564	M.RESISTOR CH 3W 560K	1	
R2005	ERJ3GEYJ103	M.RESISTOR CH 3W 10K	1	
R2006	ERJ3GEYJ332	M.RESISTOR CH 3W 3.3K	1	
R2007	ERJ3GEYJ102	M.RESISTOR CH 3W 1K	1	
R2008	ERJ3GEYJ474	M.RESISTOR CH 3W 470K	1	
R2009	ERJ3GEYJ222	M.RESISTOR CH 3W 2.2K	1	
R2010	ERJ8GCYJ1R0	M.RESISTOR CH 1/8W 1.0	1	
R2011,12	ERJ3GEYJ473	M.RESISTOR CH 3W 47K	2	
R2013	ERJ8GCYJR47	M.RESISTOR CH 1/8W 0.47	1	
R2014	ERJ8GCYJR33	M.RESISTOR CH 1/8W 0.33	1	
R2015	ERJ3GEYJ561	M.RESISTOR CH 3W 560	1	
R2016-18	ERJ3GEYJ682	M.RESISTOR CH 3W 6.8K	3	
R2019	ERJ3GEYJ102	M.RESISTOR CH 3W 1K	1	
R2020	ERJ8GCYJ681	M.RESISTOR CH 1/8W 680	1	
R2021	ERJ8GCYJ1R0	M.RESISTOR CH 1/8W 1.0	1	
R2022	ERJ3GEYJ183	M.RESISTOR CH 3W 18K	1	
R2023	ERJ3GEYJ473	M.RESISTOR CH 3W 47K	1	
R2024	ERJ3GEYJ153	M.RESISTOR CH 3W 15K	1	
R2025	ERJ3GEYJ474	M.RESISTOR CH 3W 470K	1	
R2026-29	ERJ3GEYJ103	M.RESISTOR CH 3W 10K	4	
R2030	ERJ3GEYJ274	M.RESISTOR CH 3W 270K	1	
R2031	ERJ3GEYJ474	M.RESISTOR CH 3W 470K	1	
R2032	VRE0034E334	M.RESISTOR CH 1/10W 330K	1	
R2033	VRE0034E183	M.RESISTOR CH 1/10W 18K	1	
R2034	ERJ3GEYJ474	M.RESISTOR CH 3W 470K	1	
R2036	ERJ3GEYJ123	M.RESISTOR CH 3W 12K	1	
R2037	ERJ3GEYJ103	M.RESISTOR CH 3W 10K	1	

Ref.No.	Part No.	Part Name & Description	Pcs	Remarks
R2038	ERJ3GEYJ184	M.RESISTOR CH 3W 180K	1	
R2040	ERJ3GEY0R00	M.RESISTOR CH 1/16W 0	1	
R2042,43	ERJ3GEYJ472	M.RESISTOR CH 3W 4.7K	2	
R2044	ERJ3GEYJ564	M.RESISTOR CH 3W 560K	1	
R2045	ERJ3GEYJ102	M.RESISTOR CH 3W 1K	1	
R2046	ERJ3GEYJ334	M.RESISTOR CH 3W 330K	1	
R2047	ERJ3GEYJ103	M.RESISTOR CH 3W 10K	1	
R2049,50	ERJ3GEYJ103	M.RESISTOR CH 3W 10K	2	
R2051	ERJ3GEYJ334	M.RESISTOR CH 3W 330K	1	
R2052	ERJ3GEYJ102	M.RESISTOR CH 3W 1K	1	
R2053	ERJ3GEYJ5R6	M.RESISTOR CH 3W 5.6	1	
R2054	ERJ3GEYJ102	M.RESISTOR CH 3W 1K	1	
R2056,57	ERJ3GEYJ102	M.RESISTOR CH 3W 1K	2	
R2058	ERJ3GEYJ564	M.RESISTOR CH 3W 560K	1	
R2059	ERJ3GEYJ102	M.RESISTOR CH 3W 1K	1	
R2060	ERJ3GEYJ104	M.RESISTOR CH 3W 100K	1	
R2061	ERJ3GEYJ103	M.RESISTOR CH 3W 10K	1	
R2062	ERJ6GEYJ820	M.RESISTOR CH1/16W 82	1	
R2063	ERJ8GCYJ681	M.RESISTOR CH 1/8W 680	1	
R2064	ERJ3GEYJ102	M.RESISTOR CH 3W 1K	1	
R2065	ERJ3GEYJ103	M.RESISTOR CH 3W 10K	1	
R2066	ERJ8GCYJ1R0	M.RESISTOR CH 1/8W 1.0	1	
R2069	ERJ3GEYJ102	M.RESISTOR CH 3W 1K	1	
R2071	ERJ6GEYJ221	M.RESISTOR CH1/16W 220	1	
R2073	ERJ3GEY0R00	M.RESISTOR CH 1/16W 0	1	
R2075	ERJ3GEYJ103	M.RESISTOR CH 3W 10K	1	
R2076	ERJ3GEYJ184	M.RESISTOR CH 3W 180K	1	
R2077,78	ERJ3GEYJ823	M.RESISTOR CH 3W 82K	2	
R2079	ERJ3GEYJ102	M.RESISTOR CH 3W 1K	1	
R2083	ERJ6GEYJ221	M.RESISTOR CH1/16W 220	1	
R2084	ERJ3GEYJ104	M.RESISTOR CH 3W 100K	1	
R2085	ERJ3GEYJ223	M.RESISTOR CH 3W 22K	1	
R2086	VRE0034E563	M.RESISTOR CH 1/10W 56K	1	
R2087	VRE0034E223	M.RESISTOR CH 1/10W 22K	1	
R2088	ERJ3GEYJ102	M.RESISTOR CH 3W 1K	1	
R2089	ERJ3GEYJ394	M.RESISTOR CH 3W 390K	1	
R2090,91	ERJ3GEYJ104	M.RESISTOR CH 3W 100K	2	
R2092	ERJ3GEYJ334	M.RESISTOR CH 3W 330K	1	
R2093	ERJ3GEYJ102	M.RESISTOR CH 3W 1K	1	
R2094	ERJ3GEYJ124	M.RESISTOR CH 3W 120K	1	
R2095	ERJ3GEYJ824	M.RESISTOR CH 3W 820K	1	
R2096	ERJ3GEYJ124	M.RESISTOR CH 3W 120K	1	
R2097,98	ERJ3GEYJ183	M.RESISTOR CH 3W 18K	2	
R2099	ERJ3GEY0R00	M.RESISTOR CH 1/16W 0	1	
T1002	VTP0358	TRANSFORMER	1	
VR1001-06	EVM7JGA00B23	V.RESISTOR	6	
**********	VEP03B01B	P.C.BOARD W/COMPONENT		
		VIDEO		
	VEP00U81A	P.C.BOARD W/COMPONENT		ON VEP03B01B
		VIDEO SUB		
		CAPACITORS		
C1	ECEV1AA221	E.CAPACITOR 10V 220U	1	
C2,C3	ECUM1H103ZFN	C.CAPACITOR CH 50V 0.01U	2	
C4	ECUM1H104ZFN	C.CAPACITOR CH 50V 0.1U	1	
C5	ECEV0JV330S	E.CAPACITOR 6.3V 33U	1	
C6	ECUM1H103ZFN	C.CAPACITOR CH 50V 0.01U	1	
C3002	ECEV0GV470	E.CAPACITOR 4V 47U	1	

Ref.No.	Part No.	Part Name & Description	Pcs	Remarks
C3005	ECUX1H150JCV	C.CAPACITOR CH 50V 15P	1	
C3006	ECUX1H271JCV	C.CAPACITOR CH 50V 270P	1	
C3007	ECUX1H820JCV	C.CAPACITOR CH 50V 82P	1	
C3008	ECUX1H271JCV	C.CAPACITOR CH 50V 270P	1	
C3009	ECUX1H221JCV	C.CAPACITOR CH 50V 220P	1	
C3010	ECUX1H271JCV	C.CAPACITOR CH 50V 270P	1	
C3011,12	ECST1AY475Z	T.CAPACITOR 10V 4.7U	2	
C3013	ECEV0JV330	E.CAPACITOR 6.3V 33U	1	
C3014	ECUX1H103KBV	C.CAPACITOR CH 50V 0.01P	1	
C3023	ECUX1H103KBV	C.CAPACITOR CH 50V 0.01P	1	
C3024	ECEV0JV101	E.CAPACITOR 6.3V 100U	1	
C3025,26	ECUX1E104ZFV	C.CAPACITOR CH 25V 0.001U	2	
C3028	ECUM1C105ZFN	C.CAPACITOR CH 16V 1U	1	
C3029	ECUX1H390JCV	C.CAPACITOR CH 50V 39P	1	
C3030	ECUX1H221JCV	C.CAPACITOR CH 50V 220P	1	
C3031	ECUX1H820JCV	C.CAPACITOR CH 50V 82P	1	
C3033,34	ECUX1H103KBV	C.CAPACITOR CH 50V 0.01P	2	
C3036	ECUX1H330JCV	C.CAPACITOR CH 50V 33P	1	
C3037	ECUX1H390JCV	C.CAPACITOR CH 50V 39P	1	
C3042	ECUX1H560JCV	C.CAPACITOR CH 50V 56P	1	
C3043	ECUX1H220JCV	C.CAPACITOR CH 50V 22P	1	
C3045	ECUX1H150JCV	C.CAPACITOR CH 50V 15P	1	
C3047	ECST0JX156Z	T.CAPACITOR 6.3V 15U	1	
C3053	ECUX1H103KBV	C.CAPACITOR CH 50V 0.01P	1	
C3055	ECUX1E104ZFV	C.CAPACITOR CH 25V 0.001U	1	
C3059	ECUX1H472KBV	C.CAPACITOR CH 50V 4700P	1	
C3061	ECUX1H150JCV	C.CAPACITOR CH 50V 15P	1	
C3062	ECUX1H390JCV	C.CAPACITOR CH 50V 39P	1	
C3065	ECUX1H103KBV	C.CAPACITOR CH 50V 0.01P	1	
C3071	ECUX1H820JCV	C.CAPACITOR CH 50V 82P	1	
C3072	ECUX1H103KBV	C.CAPACITOR CH 50V 0.01P	1	
C3075	ECEV0JA331	E.CAPACITOR 6.3V 330U	1	
C3076	ECEV1EN4R7	E.CAPACITOR 25V 4.7U	1	
C3080	ECUX1H820JCV	C.CAPACITOR CH 50V 82P	1	
C3081	ECUX1H220JCV	C.CAPACITOR CH 50V 22P	1	
C3085	ECUX1H820JCV	C.CAPACITOR CH 50V 82P	1	
C3086	ECUX1H680JCV	C.CAPACITOR CH 50V 68P	1	
C3087	ECUX1E104ZFV	C.CAPACITOR CH 25V 0.001U	1	
C3201	ECUX1H560JCV	C.CAPACITOR CH 50V 56P	1	
C3203	ECUX1H680JCV	C.CAPACITOR CH 50V 68P	1	
C3208	ECUX1E104ZFV	C.CAPACITOR CH 25V 0.001U	1	
C3212	ECUX1H103KBV	C.CAPACITOR CH 50V 0.01P	1	
C3218	ECEV1CV100	E.CAPACITOR 16V 10U	1	
C3220	ECUX1E104ZFV	C.CAPACITOR CH 25V 0.001U	1	
C3221	ECEV1CV100	E.CAPACITOR 16V 10U	1	
C3223	ECEV1EN4R7	E.CAPACITOR 25V 4.7U	1	
C3224	ECEV0JV470	E.CAPACITOR 6.3V 47U	1	
C3225	ECEV0JN100Q	E.CAPACITOR 6.3V 10U	1	
C3300	ECUX1E104ZFV	C.CAPACITOR CH 25V 0.001U	1	
C3301	ECEV0JV330	E.CAPACITOR 6.3V 33U	1	
C3305	ECUX1E104ZFV	C.CAPACITOR CH 25V 0.001U	1	
C3306	ECEV0GV470	E.CAPACITOR 4V 47U	1	
C3307	ECUX1H103KBV	C.CAPACITOR CH 50V 0.01P	1	
C3308	ECUX1E104ZFV	C.CAPACITOR CH 25V 0.001U	1	
C3309	ECEV0JV330	E.CAPACITOR 6.3V 33U	1	
C3311-13	ECEV0JN470	E.CAPACITOR 6.3V 47U	3	
C3318	ECUX1H270JCV	C.CAPACITOR CH 50V 27P	1	
C3319,20	ECEV0JV330	E.CAPACITOR 6.3V 33U	2	
C3322	ECEV0JN470	E.CAPACITOR 6.3V 47U	1	
C3324	ECEV0JA331	E.CAPACITOR 6.3V 330U	1	
C3325,26	ECUX1E104ZFV	C.CAPACITOR CH 25V 0.001U	2	
C3327	ECUX1H103KBV	C.CAPACITOR CH 50V 0.01P	1	
C3328	ECUX1E104ZFV	C.CAPACITOR CH 25V 0.001U	1	
C3330	ECUX1H271JCV	C.CAPACITOR CH 50V 270P	1	
C3331	ECUX1H391JCV	C.CAPACITOR CH 50V 390P	1	
C3333	ECUX1H103KBV	C.CAPACITOR CH 50V 0.01P	1	
C3337	ECUX1H820JCV	C.CAPACITOR CH 50V 82P	1	
C3338	ECUX1H181JCV	C.CAPACITOR CH 50V 180P	1	
C3340	ECUX1H103KBV	C.CAPACITOR CH 50V 0.01P	1	
C3341	ECUX1E104ZFV	C.CAPACITOR CH 25V 0.001U	1	
C3342	ECEV1CV470	E.CAPACITOR 16V 47U	1	
C3347	ECUX1E104ZFV	C.CAPACITOR CH 25V 0.001U	1	
C3348	ECEV1CV470	E.CAPACITOR 16V 47U	1	
C3352,53	ECUX1E104ZFV	C.CAPACITOR CH 25V 0.001U	2	
C3354	ECEA0JKA101	E.CAPACITOR 6.3V 100U	1	

Ref.No.	Part No.	Part Name & Description	Pcs	Remarks
C3355	ECUX1E104ZFV	C.CAPACITOR CH 25V 0.001U	1	
C5001	ECEV0GV470	E.CAPACITOR 4V 47U	1	
C5002,03	ECUX1H103KBV	C.CAPACITOR CH 50V 0.01P	2	
C5004-11	ECUX1E104ZFV	C.CAPACITOR CH 25V 0.001U	8	
C5012-15	ECUX1H220JCV	C.CAPACITOR CH 50V 22P	4	
C5016-23	ECUM1C224ZFN	C.CAPACITOR CH 16V 0.22U	8	
C5024	ECEV1CV100	E.CAPACITOR 16V 10U	1	
C5025-27	ECUX1H103KBV	C.CAPACITOR CH 50V 0.01P	3	
C5028	ECUM1H273KBN	C.CAPACITOR CH 50V 0.027U	1	
C5029	ECUX1H822KBV	C.CAPACITOR CH 50V 8200P	1	
C5030,31	ECUX1H103KBV	C.CAPACITOR CH 50V 0.01P	2	
C5032	ECEV0JV330	E.CAPACITOR 6.3V 33U	1	
C5033	ECUX1H103KBV	C.CAPACITOR CH 50V 0.01P	1	
C5034	ECEV1CV100	E.CAPACITOR 16V 10U	1	
C5035	ECUX1E104ZFV	C.CAPACITOR CH 25V 0.001U	1	
C5036-39	ECUX1H103KBV	C.CAPACITOR CH 50V 0.01P	4	
C5040-43	ECUX1H121JCV	C.CAPACITOR CH 50V 120P	4	
C5044-47	ECUX1E104ZFV	C.CAPACITOR CH 25V 0.001U	4	
C5048-51	ECUX1H103KBV	C.CAPACITOR CH 50V 0.01P	4	
C5052	ECUX1H121JCV	C.CAPACITOR CH 50V 120P	1	
C5053	ECUX1H151JCV	C.CAPACITOR CH 50V 150P	1	
C5054	ECUX1H270JCV	C.CAPACITOR CH 50V 27P	1	
C5055,56	ECUX1E104ZFV	C.CAPACITOR CH 25V 0.001U	2	
C5062-65	ECUX1E104ZFV	C.CAPACITOR CH 25V 0.001U	4	
C5066	ECEV0JV330	E.CAPACITOR 6.3V 33U	1	
C5067	ECUX1H103KBV	C.CAPACITOR CH 50V 0.01P	1	
C5072	ECUM1H123KBV	C.CAPACITOR CH 50V 0.012U	1	
C5073	ECUM1E683KBN	C.CAPACITOR CH 25V 0.068U	1	
C5080	ECEV0GV470	E.CAPACITOR 4V 47U	1	
C5081	ECUX1H103KBV	C.CAPACITOR CH 50V 0.01P	1	
C5082	ECUX1E104ZFV	C.CAPACITOR CH 25V 0.001U	1	
C5083	ECEV0JV470	E.CAPACITOR 6.3V 47U	1	
C5084	ECUX1H103KBV	C.CAPACITOR CH 50V 0.01P	1	
C5085	ECEV1CV100	E.CAPACITOR 16V 10U	1	
C5086	ECUX1E104ZFV	C.CAPACITOR CH 25V 0.001U	1	
C5087	ECUX1H103KBV	C.CAPACITOR CH 50V 0.01P	1	
C5088	ECEV1CV100	E.CAPACITOR 16V 10U	1	
C8001	ECUX1H103KBV	C.CAPACITOR CH 50V 0.01P	1	
C8002	ECUX1H060DCV	C.CAPACITOR CH 50V 6P	1	
C8003	ECUX1H100DCV	C.CAPACITOR CH 50V 10P	1	
C8004	ECEV0JV330	E.CAPACITOR 6.3V 33U	1	
C8005	ECUX1E104ZFV	C.CAPACITOR CH 25V 0.001U	1	
C8015	ECUX1E104ZFV	C.CAPACITOR CH 25V 0.001U	1	
C8016	ECUX1H103KBV	C.CAPACITOR CH 50V 0.01P	1	
C8017	ECEV0JA331	E.CAPACITOR 6.3V 330U	1	
C8018	ECUX1E104ZFV	C.CAPACITOR CH 25V 0.001U	1	
C8040	ECUX1H390JCV	C.CAPACITOR CH 50V 39P	1	
C8048	ECUX1H332KBV	C.CAPACITOR CH 50V 3300P	1	
C8049	ECEV1EV4R7	E.CAPACITOR 25V 4.7U	1	
C8062,63	ECUX1H181JCV	C.CAPACITOR CH 50V 180P	2	
C8065	ECUM1C105ZFN	C.CAPACITOR CH 16V 1U	1	
C8066	ECUX1H102JV	C.CAPACITOR CH 50V 1000P	1	
C8071	ECUX1H182KBV	C.CAPACITOR CH 50V 1800P	1	
C8072	ECUX1E104ZFV	C.CAPACITOR CH 25V 0.001U	1	
C8074	ECUM1C105ZFN	C.CAPACITOR CH 16V 1U	1	
C8076	ECUM1C105ZFN	C.CAPACITOR CH 16V 1U	1	
C8081	ECUX1H820JCV	C.CAPACITOR CH 50V 82P	1	
C8101	ECUX1E104ZFV	C.CAPACITOR CH 25V 0.001U	1	
C8102	ECUX1H330JCV	C.CAPACITOR CH 50V 33P	1	
C8103	ECUX1H120JCV	C.CAPACITOR CH 50V 12P	1	
C8104	ECUX1H391JCV	C.CAPACITOR CH 50V 390P	1	
C8105	ECUX1H470JCV	C.CAPACITOR CH 50V 47P	1	
C8106	ECEV0JV330	E.CAPACITOR 6.3V 33U	1	
C8107	ECUX1H470JCV	C.CAPACITOR CH 50V 47P	1	
C8109	ECUX1H680JCV	C.CAPACITOR CH 50V 68P	1	
C8110-12	ECUX1E104ZFV	C.CAPACITOR CH 25V 0.001U	3	
C8113	ECUX1H331JCV	C.CAPACITOR CH 50V 330P	1	
C8115-17	ECUX1E104ZFV	C.CAPACITOR CH 25V 0.001U	3	
C8119	ECUX1H121JCV	C.CAPACITOR CH 50V 120P	1	
C8120	ECUX1E104ZFV	C.CAPACITOR CH 25V 0.001U	1	
C8201	ECCF1H680JC	C.CAPACITOR 50V 68P	1	
C8301,02	ECUX1H103KBV	C.CAPACITOR CH 50V 0.01P	2	
C8303	ECUX1H121JCV	C.CAPACITOR CH 50V 120P	1	
C8304	ECUX1H103KBV	C.CAPACITOR CH 50V 0.01P	1	
C8305	ECEV1EN4R7	E.CAPACITOR 25V 4.7U	1	

Ref.No.	Part No.	Part Name & Description	Pcs	Remarks
C8306	ECUX1H471JCV	C.CAPACITOR CH 50V 470P	1	
C8307	ECUX1H103KBV	C.CAPACITOR CH 50V 0.01P	1	
C8308	ECUX1H330JCV	C.CAPACITOR CH 50V 33P	1	
C8309,10	ECUX1H103KBV	C.CAPACITOR CH 50V 0.01P	2	
C8311	ECEV0JV330	E.CAPACITOR 6.3V 33U	1	
C8312,13	ECUX1H103KBV	C.CAPACITOR CH 50V 0.01P	2	
C8314	ECUX1H820JCV	C.CAPACITOR CH 50V 82P	1	
C8315	ECUX1H180JCV	C.CAPACITOR CH 50V 18P	1	
C8316	ECUM1C105ZFN	C.CAPACITOR CH 16V 1U	1	
C8317	ECEA1HKA2R2	E.CAPACITOR 50V 2.2U	1	
C8318	ECUM1C105ZFN	C.CAPACITOR CH 16V 1U	1	
C8319	ECEV0JV330	E.CAPACITOR 6.3V 33U	1	
C8320	ECUX1H180JCV	C.CAPACITOR CH 50V 18P	1	
C8321-23	ECUX1H103KBV	C.CAPACITOR CH 50V 0.01P	3	
C8401,02	ECUX1H103KBV	C.CAPACITOR CH 50V 0.01P	2	
CN3001	VJP3507A080	CONNECTOR (MALE)	1	
D3201,02	MA729	DIODE	2	<R>
D5001	MA159	DIODE	1	<R>
D5002	MA142WA	DIODE	1	<R>
D5003	MA159	DIODE	1	<R>
D5004	MA142WA	DIODE	1	<R>
D5005	MA143	DIODE	1	<R>
D5006-09	MA728	DIODE	4	<R>
D8001	MA142WK	DIODE	1	<R>
D8301	MA142WK	DIODE	1	<R>
DL3001	ELB4C560	DELAY	1	
DL8401	VLD0089	DELAY	1	
FL3001,02	VLF0941C223	FILTER	2	
FL8001	VLF0941C223	FILTER	1	
IC1	AN77L05M	IC	1	
IC2	XC62AP3502ML	IC	1	<R>
IC3001	VEFH25D	IC	1	<R>
IC3002	TL8819F	IC	1	<R>
IC3003	AN3298NSB	IC	1	<R>
IC3004	NJM2207M	IC	1	<R>
IC3007	MC14577BF	IC	1	<R>
IC3008	XC62AP3502ML	IC	1	<R>
IC3010	MC14577BF	IC	1	<R>
IC3011,12	TC4W53F	IC	2	<R>
IC3013	MC14577BF	IC	1	<R>
IC5001	AN3350FHP	IC	1	<R>
IC8001	VEFH26B	IC	1	<R>
IC8002	TL8833F	IC	1	<R>
IC8003	TC4W53F	IC	1	<R>
IC8301	AN3497SB	IC	1	<R>
IC8302	TL8819F	IC	1	<R>
L3001	VLQ0319K101	COIL 100UH	1	
L3003	VLQ0163J820	COIL 82UH	1	
L3004	VLQ0319F150	COIL 15UH	1	
L3010	VLQ0426J470	COIL 47UH	1	
L3011	VLQ0163J120	COIL 12UH	1	
L3012	VLQ0426J100	COIL 10UH	1	
L3015	VLQ0426J680	COIL 68UH	1	
L3017	VLQ0426J560	COIL 56UH	1	
L3018,19	VLQ0319K101	COIL 100UH	2	
L3021	VLQ0426J390	COIL 39UH	1	
L3025	VLQ0426J6R8	COIL 6.8UH	1	

Ref.No.	Part No.	Part Name & Description	Pcs	Remarks
L3030	VLQ0426J330	COIL 33UH	1	
L3032	VLQ0319K101	COIL 100UH	1	
L3034	VLQ0319K101	COIL 100UH	1	
L3035,36	VLQ0319K221	COIL 220UH	2	
L3037	VLQ0163J151	COIL 150UH	1	
L3039	VLQ0163J4R7	COIL 4.7UH	1	
L3040	VLQ0163J151	COIL 150UH	1	
L3041	VLQ0163J820	COIL 82UH	1	
L3045	VLQ0163J151	COIL 150UH	1	
L3047,48	VLQ0319K101	COIL 100UH	2	
L5001-03	VLQ0319F150	COIL 15UH	3	
L5004	VLQ0319K101	COIL 100UH	1	
L5005	VLQ0163J120	COIL 12UH	1	
L5006-08	VLQ0319F150	COIL 15UH	3	
L8001	VLQ0426J270	COIL 27UH	1	
L8002,03	VLQ0426J100	COIL 10UH	2	
L8004	VLQ0319K101	COIL 100UH	1	
L8006	VLQ0426J330	COIL 33UH	1	
L8007	VLQ0319K221	COIL 220UH	1	
L8012	VLQ0319K101	COIL 100UH	1	
L8013	VLQ0163J181	COIL 180UH	1	
L8014	VLQ0319K151	COIL 150UH	1	
L8015	VLQ0319F150	COIL 15UH	1	
L8016	VLQ0133J471	COIL 470UH	1	
L8018	VLQ0319K151	COIL 150UH	1	
L8020	VLQ0163J150	COIL 15UH	1	
L8301	VLQ0319K101	COIL 100UH	1	
L8302	VLQ0163J101	COIL 100UH	1	
L8401,02	VLQ0163J150	COIL 15UH	2	
P3010	VJP3125B006	CONNECTOR (MALE)	1	
P3011	VJP3358A012	CONNECTOR (MALE)	1	
P5002	VJS2958B023	CONNECTOR (FEMALE)	1	
Q1	UN2213	TRANSISTOR	1	<R>
Q3001	2SB970X	TRANSISTOR	1	<R>
Q3006	2SD1819A-R	TRANSISTOR	1	<R>
Q3008-10	2SC3931-C	TRANSISTOR	3	<R>
Q3012	2SD1819A-R	TRANSISTOR	1	<R>
Q3014	2SB1218A	TRANSISTOR	1	<R>
Q3016	2SD1819A-R	TRANSISTOR	1	<R>
Q3017	2SB1218A	TRANSISTOR	1	<R>
Q3022	2SB970X	TRANSISTOR	1	<R>
Q3025,26	2SD1819A-R	TRANSISTOR	2	<R>
Q3027,28	2SC3931-C	TRANSISTOR	2	<R>
Q3029	2SD1819A-R	TRANSISTOR	1	<R>
Q3030	2SB1218A	TRANSISTOR	1	<R>
Q3031	2SD1819A-R	TRANSISTOR	1	<R>
Q3032	2SC3931-C	TRANSISTOR	1	<R>
Q3033	2SB1218A	TRANSISTOR	1	<R>
Q3040-42	2SD1819A-R	TRANSISTOR	3	<R>
Q3043	2SB1218A	TRANSISTOR	1	<R>
Q3045	2SD1819A-R	TRANSISTOR	1	<R>
Q3046,47	2SB1218A	TRANSISTOR	2	<R>
Q3048	2SD1819A-R	TRANSISTOR	1	<R>
Q3049	2SD1754APY	TRANSISTOR	1	
Q5001,02	XN4504	TRANSISTOR	2	<R>
Q5003	2SB970X	TRANSISTOR	1	<R>
Q5004,05	2SA812	TRANSISTOR	2	<R>
Q5006,07	XN4504	TRANSISTOR	2	<R>
Q5008,09	2SD1328-R	TRANSISTOR	2	<R>
Q5010,11	2SB970X	TRANSISTOR	2	<R>
Q8001,02	2SD1819A-R	TRANSISTOR	2	<R>
Q8009	2SB1218A	TRANSISTOR	1	<R>
Q8013	2SB1218A	TRANSISTOR	1	<R>
Q8014,15	2SD1819A-R	TRANSISTOR	2	<R>
Q8016	2SC3931-C	TRANSISTOR	1	<R>
Q8017,18	2SD1819A-R	TRANSISTOR	2	<R>
Q8019	2SB1218A	TRANSISTOR	1	<R>
Q8020	2SC3931-C	TRANSISTOR	1	<R>
Q8021	2SD1819A-R	TRANSISTOR	1	<R>

Ref.No.	Part No.	Part Name & Description	Pcs	Remarks
Q8022	2SB1218A	TRANSISTOR	1	<R>
Q8023	2SC3938-R	TRANSISTOR	1	<R>
Q8301-03	2SD1819A-R	TRANSISTOR	3	<R>
Q8304	2SB1218A	TRANSISTOR	1	<R>
Q8401	2SD1819A-R	TRANSISTOR	1	<R>
QR3001	UN5212	TRANSISTOR-RESISTOR	1	<R>
QR3003	UN5212	TRANSISTOR-RESISTOR	1	<R>
QR3009	UN5212	TRANSISTOR-RESISTOR	1	<R>
QR3011	UN5212	TRANSISTOR-RESISTOR	1	<R>
QR3013,14	UN5212	TRANSISTOR-RESISTOR	2	<R>
QR3016	UN5212	TRANSISTOR-RESISTOR	1	<R>
QR3018-20	UN5212	TRANSISTOR-RESISTOR	3	<R>
QR3021	UN5113	TRANSISTOR-RESISTOR	1	<R>
QR3022	UN5211	TRANSISTOR-RESISTOR	1	<R>
QR3023	UN5213	TRANSISTOR	1	<R>
QR5001	UN5213	TRANSISTOR	1	<R>
QR5002	UN5212	TRANSISTOR-RESISTOR	1	<R>
QR5004	XP1213	TRANSISTOR-RESISTOR	1	<R>
QR5005	UN5212	TRANSISTOR-RESISTOR	1	<R>
QR5006	UN5213	TRANSISTOR	1	<R>
QR5007	UN5211	TRANSISTOR-RESISTOR	1	<R>
QR5008,09	UN5213	TRANSISTOR	2	<R>
QR8001	UN5212	TRANSISTOR-RESISTOR	1	<R>
		RESISTORS		
R1	ERJ6GEYJ560	M.RESISTOR CH1/16W 56	1	
R2	ERJ6GEYJ103	M.RESISTOR CH1/16W 10K	1	
R3	ERJ6GEYJ681	M.RESISTOR CH1/16W 680	1	
R4	ERJ6GEYJ101	M.RESISTOR CH1/16W 100	1	
R3001	ERJ3GEYJ222	M.RESISTOR CH 3W 2.2K	1	
R3002	ERJ3GEYJ152	M.RESISTOR CH 3W 1.5K	1	
R3003,04	VRE0034E102	M.RESISTOR CH 1/10W 1K	2	
R3005	VRE0034E471	M.RESISTOR CH 1/10W 470	1	
R3006	VRE0034E332	M.RESISTOR CH 1/10W 3.3K	1	
R3007	VRE0034E152	M.RESISTOR CH 1/10W 1.5K	1	
R3008	VRE0034E332	M.RESISTOR CH 1/10W 3.3K	1	
R3024	ERJ3GEYJ821	M.RESISTOR CH 3W 820	1	
R3025	ERJ3GEYJ102	M.RESISTOR CH 3W 1K	1	
R3026	ERJ3GEYJ182	M.RESISTOR CH 3W 1.8K	1	
R3028	ERJ3GEYJ273	M.RESISTOR CH 3W 27K	1	
R3030	ERJ3GEYJ223	M.RESISTOR CH 3W 22K	1	
R3031	ERJ3GEYJ151	M.RESISTOR CH 3W 150	1	
R3033	ERJ3GEYJ561	M.RESISTOR CH 3W 560	1	
R3036	ERJ3GEYJ473	M.RESISTOR CH 3W 47K	1	
R3037	ERJ3GEYJ102	M.RESISTOR CH 3W 1K	1	
R3041	ERJ3GEYJ473	M.RESISTOR CH 3W 47K	1	
R3042	ERJ3GEYJ102	M.RESISTOR CH 3W 1K	1	
R3044	ERJ3GEYJ821	M.RESISTOR CH 3W 820	1	
R3045	ERJ3GEYJ822	M.RESISTOR CH 3W 8.2K	1	
R3046	ERJ3GEYJ223	M.RESISTOR CH 3W 22K	1	
R3047	ERJ3GEYJ472	M.RESISTOR CH 3W 4.7K	1	
R3049	ERJ3GEYJ101	M.RESISTOR CH 3W 100	1	
R3055	ERJ3GEYJ222	M.RESISTOR CH 3W 2.2K	1	
R3056	ERJ3GEYJ102	M.RESISTOR CH 3W 1K	1	
R3064	ERJ3GEYJ272	M.RESISTOR CH 3W 2.7K	1	
R3068,69	ERJ3GEYJ103	M.RESISTOR CH 3W 10K	2	
R3070	ERJ3GEYJ561	M.RESISTOR CH 3W 560	1	
R3071	ERJ3GEYJ103	M.RESISTOR CH 3W 10K	1	
R3072	ERJ3GEYJ561	M.RESISTOR CH 3W 560	1	
R3073	ERJ3GEYJ122	M.RESISTOR CH 3W 1.2K	1	
R3074	ERJ3GEYJ102	M.RESISTOR CH 3W 1K	1	
R3075	ERJ3GEYJ152	M.RESISTOR CH 3W 1.5K	1	
R3076	ERJ3GEYJ471	M.RESISTOR CH 3W 470	1	
R3077	ERJ3GEYJ122	M.RESISTOR CH 3W 1.2K	1	
R3079	ERJ3GEYJ221	M.RESISTOR CH 3W 220	1	
R3080	ERJ3GEYJ152	M.RESISTOR CH 3W 1.5K	1	
R3090	ERJ3GEYJ153	M.RESISTOR CH 3W 15K	1	
R3091	ERJ3GEYJ332	M.RESISTOR CH 3W 3.3K	1	
R3098	ERJ3GEYJ474	M.RESISTOR CH 3W 470K	1	
R3103	ERJ3GEYJ223	M.RESISTOR CH 3W 22K	1	

Ref.No.	Part No.	Part Name & Description	Pcs	Remarks
R3104	ERJ3GEYJ103	M.RESISTOR CH 3W 10K	1	
R3109	ERJ3GEYJ182	M.RESISTOR CH 3W 1.8K	1	
R3110	ERJ3GEY0R00	M.RESISTOR CH 1/16W 0	1	
R3113	ERJ3GEYJ102	M.RESISTOR CH 3W 1K	1	
R3117,18	ERJ3GEYJ103	M.RESISTOR CH 3W 10K	2	
R3127	ERJ3GEYJ183	M.RESISTOR CH 3W 18K	1	
R3128	ERJ3GEYJ474	M.RESISTOR CH 3W 470K	1	
R3136	ERJ3GEYJ102	M.RESISTOR CH 3W 1K	1	
R3142	ERJ3GEYJ102	M.RESISTOR CH 3W 1K	1	
R3157	ERJ3GEYJ222	M.RESISTOR CH 3W 2.2K	1	
R3160	ERJ3GEYJ152	M.RESISTOR CH 3W 1.5K	1	
R3201	ERJ3GEYJ333	M.RESISTOR CH 3W 33K	1	
R3203	ERJ3GEYJ223	M.RESISTOR CH 3W 22K	1	
R3226	ERJ3GEY0R00	M.RESISTOR CH 1/16W 0	1	
R3227	ERJ3GEYJ681	M.RESISTOR CH 3W 680	1	
R3241	ERJ3GEYJ474	M.RESISTOR CH 3W 470K	1	
R3242	ERJ3GEYJ471	M.RESISTOR CH 3W 470	1	
R3243	ERJ3GEYJ102	M.RESISTOR CH 3W 1K	1	
R3244	ERJ3GEYJ181	M.RESISTOR CH 3W 180	1	
R3245	ERJ3GEYJ272	M.RESISTOR CH 3W 2.7K	1	
R3246	ERJ3GEYJ472	M.RESISTOR CH 3W 4.7K	1	
R3247	ERJ3GEYJ822	M.RESISTOR CH 3W 8.2K	1	
R3251	ERJ3GEYJ332	M.RESISTOR CH 3W 3.3K	1	
R3252	ERJ3GEYJ471	M.RESISTOR CH 3W 470	1	
R3253	ERJ3GEYJ332	M.RESISTOR CH 3W 3.3K	1	
R3254	ERJ3GEYJ153	M.RESISTOR CH 3W 15K	1	
R3255	ERJ3GEYJ152	M.RESISTOR CH 3W 1.5K	1	
R3256	ERJ3GEYJ472	M.RESISTOR CH 3W 4.7K	1	
R3257	ERJ3GEYJ103	M.RESISTOR CH 3W 10K	1	
R3259	ERJ3GEY0R00	M.RESISTOR CH 1/16W 0	1	
R3260	ERJ3GEYJ270	M.RESISTOR CH 3W 27	1	
R3261	ERJ3GEYJ223	M.RESISTOR CH 3W 22K	1	
R3262	ERJ3GEYJ682	M.RESISTOR CH 3W 6.8K	1	
R3263	ERJ3GEYJ270	M.RESISTOR CH 3W 27	1	
R3264	ERJ3GEYJ222	M.RESISTOR CH 3W 2.2K	1	
R3265,66	ERJ3GEYJ472	M.RESISTOR CH 3W 4.7K	2	
R3267	ERJ3GEYJ332	M.RESISTOR CH 3W 3.3K	1	
R3271,72	ERJ3GEYJ222	M.RESISTOR CH 3W 2.2K	2	
R3276,77	ERJ3GEYJ682	M.RESISTOR CH 3W 6.8K	2	
R3278,79	ERJ3GEYJ103	M.RESISTOR CH 3W 10K	2	
R3304	ERJ3GEYJ100	M.RESISTOR CH 3W 10	1	
R3305	ERJ3GEYJ561	M.RESISTOR CH 3W 560	1	
R3316	ERJ3GEYJ103	M.RESISTOR CH 3W 10K	1	
R3317	ERJ3GEYJ153	M.RESISTOR CH 3W 15K	1	
R3318	ERJ3GEYJ561	M.RESISTOR CH 3W 560	1	
R3319	ERJ3GEYJ221	M.RESISTOR CH 3W 220	1	
R3320	ERJ3GEYJ153	M.RESISTOR CH 3W 15K	1	
R3321	ERJ3GEYJ103	M.RESISTOR CH 3W 10K	1	
R3322	ERJ3GEYJ332	M.RESISTOR CH 3W 3.3K	1	
R3323	ERJ3GEYJ471	M.RESISTOR CH 3W 470	1	
R3324,25	ERJ3GEYJ102	M.RESISTOR CH 3W 1K	2	
R3326	ERJ3GEYJ561	M.RESISTOR CH 3W 560	1	
R3327	ERJ3GEYJ151	M.RESISTOR CH 3W 150	1	
R3328	ERJ3GEYJ472	M.RESISTOR CH 3W 4.7K	1	
R3329	ERJ3GEY0R00	M.RESISTOR CH 1/16W 0	1	
R3330	ERJ3GEYJ561	M.RESISTOR CH 3W 560	1	
R3341	ERJ3GEY0R00	M.RESISTOR CH 1/16W 0	1	
R3342	ERJ3GEYJ470	M.RESISTOR CH 3W 47	1	
R3343	ERJ3GEYJ182	M.RESISTOR CH 3W 1.8K	1	
R3344	ERJ3GEYJ470	M.RESISTOR CH 3W 47	1	
R3345	ERJ3GEYJ102	M.RESISTOR CH 3W 1K	1	
R3346	ERJ3GEYJ222	M.RESISTOR CH 3W 2.2K	1	
R3347	ERJ3GEYJ681	M.RESISTOR CH 3W 680	1	
R3348	ERJ3GEYJ391	M.RESISTOR CH 3W 390	1	
R3349	ERJ3GEYJ152	M.RESISTOR CH 3W 1.5K	1	
R3350	ERJ3GEYJ102	M.RESISTOR CH 3W 1K	1	
R3352	ERJ3GEYJ471	M.RESISTOR CH 3W 470	1	
R3353	ERJ3GEYJ221	M.RESISTOR CH 3W 220	1	
R3355,56	ERJ3GEYJ473	M.RESISTOR CH 3W 47K	2	
R3357	ERJ3GEYJ102	M.RESISTOR CH 3W 1K	1	
R3359	ERJ3GEY0R00	M.RESISTOR CH 1/16W 0	1	
R3363	ERJ3GEY0R00	M.RESISTOR CH 1/16W 0	1	
R3364	ERJ3GEYJ102	M.RESISTOR CH 3W 1K	1	
R3365,66	ERJ3GEYJ473	M.RESISTOR CH 3W 47K	2	
R3367,68	ERJ3GEYJ332	M.RESISTOR CH 3W 3.3K	2	

Ref.No.	Part No.	Part Name & Description	Pcs	Remarks
R3370,71	ERJ3GEYJ561	M.RESISTOR CH 3W 560	2	
R3373,74	ERJ3GEYJ561	M.RESISTOR CH 3W 560	2	
R3375,76	ERJ3GEYJ472	M.RESISTOR CH 3W 4.7K	2	
R3377	ERJ3GEYJ152	M.RESISTOR CH 3W 1.5K	1	
R3381	ERJ3GEYJ562	M.RESISTOR CH 3W 5.6K	1	
R3382,83	ERJ3GEYJ102	M.RESISTOR CH 3W 1K	2	
R3384	ERJ3GEYJ470	M.RESISTOR CH 3W 47	1	
R3389	ERJ3GEYJ101	M.RESISTOR CH 3W 100	1	
R5001	ERJ3GEYJ332	M.RESISTOR CH 3W 3.3K	1	
R5002	ERJ3GEYJ222	M.RESISTOR CH 3W 2.2K	1	
R5003	ERJ3GEYJ822	M.RESISTOR CH 3W 8.2K	1	
R5004-07	ERJ3GEYJ471	M.RESISTOR CH 3W 470	4	
R5008-11	ERJ3GEYJ821	M.RESISTOR CH 3W 820	4	
R5012	ERJ3GEYJ472	M.RESISTOR CH 3W 4.7K	1	
R5013	ERJ3GEYJ272	M.RESISTOR CH 3W 2.7K	1	
R5014	ERJ3GEYJ821	M.RESISTOR CH 3W 820	1	
R5015	ERJ3GEYJ472	M.RESISTOR CH 3W 4.7K	1	
R5016-19	ERJ3GEYJ102	M.RESISTOR CH 3W 1K	4	
R5020-23	ERJ3GEYJ391	M.RESISTOR CH 3W 390	4	
R5024	ERJ6GEYJ4R7	M.RESISTOR CH1/16W 4.7	1	
R5025	ERJ3GEYJ391	M.RESISTOR CH 3W 390	1	
R5026	ERJ3GEYJ181	M.RESISTOR CH 3W 180	1	
R5027	ERJ3GEYJ822	M.RESISTOR CH 3W 8.2K	1	
R5028	ERJ3GEYJ183	M.RESISTOR CH 3W 18K	1	
R5029,30	ERJ3GEYJ100	M.RESISTOR CH 3W 10	2	
R5031	ERJ3GEYJ394	M.RESISTOR CH 3W 390K	1	
R5032	ERJ3GEYJ184	M.RESISTOR CH 3W 180K	1	
R5033,34	ERJ3GEYJ103	M.RESISTOR CH 3W 10K	2	
R5035	ERJ3GEYJ391	M.RESISTOR CH 3W 390	1	
R5036	ERJ3GEYJ332	M.RESISTOR CH 3W 3.3K	1	
R5037	ERJ3GEYJ394	M.RESISTOR CH 3W 390K	1	
R5038	ERJ3GEYJ332	M.RESISTOR CH 3W 3.3K	1	
R5039	ERJ3GEYJ183	M.RESISTOR CH 3W 18K	1	
R5040-42	ERJ3GEYJ473	M.RESISTOR CH 3W 47K	3	
R5043-45	ERJ3GEYJ223	M.RESISTOR CH 3W 22K	3	
R5046-48	ERJ3GEYJ103	M.RESISTOR CH 3W 10K	3	
R5049	ERJ3GEYJ104	M.RESISTOR CH 3W 100K	1	
R5050	ERJ3GEYJ474	M.RESISTOR CH 3W 470K	1	
R5051	ERJ3GEYJ104	M.RESISTOR CH 3W 100K	1	
R5052	ERJ3GEYJ473	M.RESISTOR CH 3W 47K	1	
R5066-71	ERJ3GEYJ394	M.RESISTOR CH 3W 390K	6	
R5074	ERJ3GEY0R00	M.RESISTOR CH 1/16W 0	1	
R5075	ERJ3GEYJ332	M.RESISTOR CH 3W 3.3K	1	
R5076	ERJ3GEYJ472	M.RESISTOR CH 3W 4.7K	1	
R5077	ERJ3GEYJ272	M.RESISTOR CH 3W 2.7K	1	
R5078	ERJ3GEYJ472	M.RESISTOR CH 3W 4.7K	1	
R5079	ERJ3GEYJ562	M.RESISTOR CH 3W 5.6K	1	
R5080	ERJ3GEYJ103	M.RESISTOR CH 3W 10K	1	
R8003	ERJ3GEYJ272	M.RESISTOR CH 3W 2.7K	1	
R8014,15	ERJ3GEYJ102	M.RESISTOR CH 3W 1K	2	
R8016	ERJ3GEYJ182	M.RESISTOR CH 3W 1.8K	1	
R8017	ERJ3GEYJ681	M.RESISTOR CH 3W 680	1	
R8044	ERJ3GEYJ222	M.RESISTOR CH 3W 2.2K	1	
R8045	ERJ3GEYJ223	M.RESISTOR CH 3W 22K	1	
R8054	ERJ3GEYJ472	M.RESISTOR CH 3W 4.7K	1	
R8057,58	ERJ3GEYJ474	M.RESISTOR CH 3W 470K	2	
R8062	ERJ3GEYJ152	M.RESISTOR CH 3W 1.5K	1	
R8064	ERJ3GEY0R00	M.RESISTOR CH 1/16W 0	1	
R8067	ERJ3GEYJ102	M.RESISTOR CH 3W 1K	1	
R8070	ERJ3GEYJ681	M.RESISTOR CH 3W 680	1	
R8071	ERJ3GEYJ102	M.RESISTOR CH 3W 1K	1	
R8072	ERJ3GEYJ122	M.RESISTOR CH 3W 1.2K	1	
R8090	ERJ3GEYJ102	M.RESISTOR CH 3W 1K	1	
R8091	ERJ3GEYJ153	M.RESISTOR CH 3W 15K	1	
R8092	ERJ3GEYJ102	M.RESISTOR CH 3W 1K	1	
R8093	ERJ3GEYJ103	M.RESISTOR CH 3W 10K	1	
R8094	ERJ3GEYJ102	M.RESISTOR CH 3W 1K	1	
R8095	ERJ3GEYJ391	M.RESISTOR CH 3W 390	1	
R8099,00	ERJ3GEYJ223	M.RESISTOR CH 3W 22K	2	
R8111	ERJ3GEYJ472	M.RESISTOR CH 3W 4.7K	1	
R8114	ERJ3GEYJ223	M.RESISTOR CH 3W 22K	1	
R8115	ERJ3GEYJ822	M.RESISTOR CH 3W 8.2K	1	
R8116	ERJ3GEYJ561	M.RESISTOR CH 3W 560	1	
R8117	ERJ3GEYJ182	M.RESISTOR CH 3W 1.8K	1	
R8118,19	ERJ3GEYJ102	M.RESISTOR CH 3W 1K	2	

Ref.No.	Part No.	Part Name & Description	Pcs	Remarks
R8120,21	ERJ3GEYJ223	M.RESISTOR CH 3W 22K	2	
R8122	ERJ3GEYJ182	M.RESISTOR CH 3W 1.8K	1	
R8123	ERJ3GEYJ152	M.RESISTOR CH 3W 1.5K	1	
R8124	ERJ3GEYJ102	M.RESISTOR CH 3W 1K	1	
R8125	ERJ3GEY0R00	M.RESISTOR CH 1/16W 0	1	
R8126	ERJ3GEYJ470	M.RESISTOR CH 3W 47	1	
R8127	ERJ3GEYJ222	M.RESISTOR CH 3W 2.2K	1	
R8128	ERJ3GEYJ101	M.RESISTOR CH 3W 100	1	
R8129	ERJ3GEYJ102	M.RESISTOR CH 3W 1K	1	
R8130	ERJ3GEYJ181	M.RESISTOR CH 3W 180	1	
R8131-33	ERJ3GEYJ102	M.RESISTOR CH 3W 1K	3	
R8134	ERJ3GEYJ272	M.RESISTOR CH 3W 2.7K	1	
R8135	ERJ3GEYJ103	M.RESISTOR CH 3W 10K	1	
R8136	ERJ3GEYJ153	M.RESISTOR CH 3W 15K	1	
R8137	ERJ3GEYJ681	M.RESISTOR CH 3W 680	1	
R8138	ERJ3GEYJ102	M.RESISTOR CH 3W 1K	1	
R8142	ERJ3GEYJ102	M.RESISTOR CH 3W 1K	1	
R8143	ERJ3GEYJ472	M.RESISTOR CH 3W 4.7K	1	
R8144	ERJ3GEY0R00	M.RESISTOR CH 1/16W 0	1	
R8145	ERJ3GEYJ152	M.RESISTOR CH 3W 1.5K	1	
R8146	ERJ3GEY0R00	M.RESISTOR CH 1/16W 0	1	
R8148	ERJ3GEYJ473	M.RESISTOR CH 3W 47K	1	
R8149	ERJ3GEYJ103	M.RESISTOR CH 3W 10K	1	
R8150	ERJ3GEYJ182	M.RESISTOR CH 3W 1.8K	1	
R8155	ERJ3GEYJ470	M.RESISTOR CH 3W 47	1	
R8201	ERDS2TJ153	C.RESISTOR 1/4W 15K	1	
R8301	ERJ3GEYJ101	M.RESISTOR CH 3W 100	1	
R8302	ERJ3GEYJ332	M.RESISTOR CH 3W 3.3K	1	
R8303	ERJ3GEYJ223	M.RESISTOR CH 3W 22K	1	
R8304,05	ERJ3GEYJ471	M.RESISTOR CH 3W 470	2	
R8306	ERJ3GEYJ103	M.RESISTOR CH 3W 10K	1	
R8307	ERJ3GEYJ122	M.RESISTOR CH 3W 1.2K	1	
R8308	ERJ3GEYJ152	M.RESISTOR CH 3W 1.5K	1	
R8309	ERJ3GEYJ681	M.RESISTOR CH 3W 680	1	
R8310	ERJ3GEYJ102	M.RESISTOR CH 3W 1K	1	
R8311	ERJ3GEYJ223	M.RESISTOR CH 3W 22K	1	
R8313	ERJ3GEYJ152	M.RESISTOR CH 3W 1.5K	1	
R8314	ERJ3GEYJ102	M.RESISTOR CH 3W 1K	1	
R8315	ERJ3GEYJ222	M.RESISTOR CH 3W 2.2K	1	
R8317	ERJ3GEYJ471	M.RESISTOR CH 3W 470	1	
R8401	ERJ3GEYJ271	M.RESISTOR CH 3W 270	1	
R8402	ERJ3GEYJ122	M.RESISTOR CH 3W 1.2K	1	
R8403,04	ERJ3GEYJ103	M.RESISTOR CH 3W 10K	2	
R8405	ERJ3GEYJ102	M.RESISTOR CH 3W 1K	1	
VR1	EVM7JGA00B22	V.RESISTOR	1	
VR3002,03	EVM7JGA00B13	V.RESISTOR	2	
VR3004	EVM7JGA00B14	V.RESISTOR	1	
VR3005	EVM7JGA00B23	V.RESISTOR	1	
VR3006	EVM7JGA00B14	V.RESISTOR	1	
VR3007	EVM7JGA00B54	V.RESISTOR	1	
VR3009	EVM7JGA00B53	V.RESISTOR	1	
VR3010	EVM7JGA00B13	V.RESISTOR	1	
VR3011	EVM7JGA00B23	V.RESISTOR	1	
VR3012-14	EVM7JGA00B13	V.RESISTOR	3	
VR8001	EVM7JGA00B54	V.RESISTOR	1	
VR8002	EVM7JGA00B23	V.RESISTOR	1	
VR8003,04	EVM7JGA00B54	V.RESISTOR	2	
VR8006,07	EVM7JGA00B33	V.RESISTOR	2	
VR8301	EVM7JGA00B52	V.RESISTOR	1	
VR8302	EVM7JGA00B13	V.RESISTOR	1	
VR8303	EVM7JGA00B53	V.RESISTOR	1	
X8001	VSX0419	CRYSTAL OSCILLATOR	1	<R>
		MISCELLANEOUS		
	VMZ2259	INSULATION SHEET	1	
	VSC4015	SHIELD PLATE	1	
	VSC4016	SHIELD PLATE	1	

Ref.No.	Part No.	Part Name & Description	Pcs	Remarks
**********	VEP04442C	P.C.BOARD W/COMPONENT		
		AUDIO & SYSCON		
		CAPACITORS		
C4101,02	ECUM1C105KBM	C.CAPACITOR CH 16V 1U	2	
C4103	ECEV0JV220	E.CAPACITOR 6.3V 22U	1	
C4104,05	ECUM1C105ZFN	C.CAPACITOR CH 16V 1U	2	
C4106	ECST1AY106Z	T.CAPACITOR 10V 10U	1	
C4107	ECUM1C105KBM	C.CAPACITOR CH 16V 1U	1	
C4108	ECEV0JV220	E.CAPACITOR 6.3V 22U	1	
C4109	ECUM1C105ZFN	C.CAPACITOR CH 16V 1U	1	
C4110	ECEV1CV100	E.CAPACITOR 16V 10U	1	
C4111,12	ECUM1C105ZFN	C.CAPACITOR CH 16V 1U	2	
C4113	ECHU1H152JB	P.CAPACITOR 50V 1500P	1	
C4114,15	ECUM1C105ZFN	C.CAPACITOR CH 16V 1U	2	
C4117	ECEV1EV220	E.CAPACITOR 25V 22U	1	
C4118	ECHU1C103J	P.CAPACITOR 0.01U	1	
C4119,20	ECUM1C105ZFN	C.CAPACITOR CH 16V 1U	2	
C4121,22	ECQB1H123JZ	P.CAPACITOR 50V 0.012U	2	
C4123	ECEV1CV100	E.CAPACITOR 16V 10U	1	
C4124	ECEV1CV470	E.CAPACITOR 16V 47U	1	
C4125	ECEV1CV220	E.CAPACITOR 16V 22U	1	
C4126	ECUX1E104ZFV	C.CAPACITOR CH 25V 0.001U	1	
C4127	ECEV1CV220	E.CAPACITOR 16V 22U	1	
C4129	ECEV1CV100	E.CAPACITOR 16V 10U	1	
C4130	ECST1VY684Z	T.CAPACITOR 35V 0.68U	1	
C4131	ECEV1CV100	E.CAPACITOR 16V 10U	1	
C4134	VCC0039	C.CAPACITOR	1	
C4135	ECUM1C105KBM	C.CAPACITOR CH 16V 1U	1	
C4201,02	ECUM1C105KBM	C.CAPACITOR CH 16V 1U	2	
C4203	ECEV0JV220	E.CAPACITOR 6.3V 22U	1	
C4204,05	ECUM1C105ZFN	C.CAPACITOR CH 16V 1U	2	
C4206	ECST1AY106Z	T.CAPACITOR 10V 10U	1	
C4207	ECUM1C105KBM	C.CAPACITOR CH 16V 1U	1	
C4208	ECEV0JV220	E.CAPACITOR 6.3V 22U	1	
C4209	ECUM1C105ZFN	C.CAPACITOR CH 16V 1U	1	
C4210	ECEV1CV100	E.CAPACITOR 16V 10U	1	
C4211,12	ECUM1C105ZFN	C.CAPACITOR CH 16V 1U	2	
C4213	ECHU1H152JB	P.CAPACITOR 50V 1500P	1	
C4214,15	ECUM1C105ZFN	C.CAPACITOR CH 16V 1U	2	
C4217	ECEV1EV220	E.CAPACITOR 25V 22U	1	
C4218	ECHU1C103J	P.CAPACITOR 0.01U	1	
C4219,20	ECUM1C105ZFN	C.CAPACITOR CH 16V 1U	2	
C4221,22	ECQB1H123JZ	P.CAPACITOR 50V 0.012U	2	
C4223	ECEV1CV100	E.CAPACITOR 16V 10U	1	
C4224	ECEV1CV470	E.CAPACITOR 16V 47U	1	
C4225	ECEV1CV220	E.CAPACITOR 16V 22U	1	
C4226	ECUX1E104ZFV	C.CAPACITOR CH 25V 0.001U	1	
C4227	ECEV0JN220Q	E.CAPACITOR 6.3V 22U	1	
C4228	ECEV0JV470	E.CAPACITOR 6.3V 47U	1	
C4229	ECEV1CV100	E.CAPACITOR 16V 10U	1	
C4230	ECST1VY684Z	T.CAPACITOR 35V 0.68U	1	
C4231	ECEV1CV100	E.CAPACITOR 16V 10U	1	
C4232,33	ECUM1C105ZFN	C.CAPACITOR CH 16V 1U	2	
C4234	VCC0039	C.CAPACITOR	1	
C4235	ECUM1C105KBM	C.CAPACITOR CH 16V 1U	1	
C4302	ECEV1EN4R7	E.CAPACITOR 25V 4.7U	1	
C4303	ECUM1C105ZFN	C.CAPACITOR CH 16V 1U	1	
C4304	ECUM1C105KBM	C.CAPACITOR CH 16V 1U	1	
C4305	ECUX1H102JV	C.CAPACITOR CH 50V 1000P	1	
C4306	ECHU1C684J	P.CAPACITOR 0.68U	1	
C4307	ECHU1C223J	P.CAPACITOR 0.022U	1	
C4308	ECEV1CV100	E.CAPACITOR 16V 10U	1	
C4309	ECEV1EV4R7	E.CAPACITOR 25V 4.7U	1	
C4310	ECHU1C223J	P.CAPACITOR 0.022U	1	
C4311	ECEV0JV470	E.CAPACITOR 6.3V 47U	1	
C4312	ECHU1C103J	P.CAPACITOR 0.01U	1	
C4313	ECUX1H332KBV	C.CAPACITOR CH 50V 3300P	1	

Ref.No.	Part No.	Part Name & Description	Pcs	Remarks
C4314	ECUX1H102JV	C.CAPACITOR CH 50V 1000P	1	
C4315	ECUX1H122KBV	C.CAPACITOR CH 50V 1200P	1	
C4316	ECUX1H102JV	C.CAPACITOR CH 50V 1000P	1	
C4317	ECEV1EN4R7	E.CAPACITOR 25V 4.7U	1	
C4319	ECUX1H103KBV	C.CAPACITOR CH 50V 0.01P	1	
C4320	ECUX1H101JCV	C.CAPACITOR CH 50V 100P	1	
C4321,22	ECUX1H103KBV	C.CAPACITOR CH 50V 0.01P	2	
C4323	ECUX1H330JCV	C.CAPACITOR CH 50V 33P	1	
C4324	ECUX1H181JCV	C.CAPACITOR CH 50V 180P	1	
C4325	ECUX1H102JV	C.CAPACITOR CH 50V 1000P	1	
C4326	ECUM1C105ZFN	C.CAPACITOR CH 16V 1U	1	
C4327	ECEV1CV100	E.CAPACITOR 16V 10U	1	
C4328	ECUM1C105ZFN	C.CAPACITOR CH 16V 1U	1	
C4329	ECUM1C105KBM	C.CAPACITOR CH 16V 1U	1	
C4331	ECEV1EN4R7	E.CAPACITOR 25V 4.7U	1	
C4332	ECUX1H152KBV	C.CAPACITOR CH 50V 1500P	1	
C4402	ECEV1EN4R7	E.CAPACITOR 25V 4.7U	1	
C4403	ECUM1C105ZFN	C.CAPACITOR CH 16V 1U	1	
C4404	ECUM1C105KBM	C.CAPACITOR CH 16V 1U	1	
C4405	ECUX1H102JV	C.CAPACITOR CH 50V 1000P	1	
C4406	ECHU1C682J	P.CAPACITOR 0.68U	1	
C4407	ECHU1C223J	P.CAPACITOR 0.022U	1	
C4408	ECEV1CV100	E.CAPACITOR 16V 10U	1	
C4409	ECEV1EV4R7	E.CAPACITOR 25V 4.7U	1	
C4410	ECHU1C223J	P.CAPACITOR 0.022U	1	
C4411	ECEV0JV470	E.CAPACITOR 6.3V 47U	1	
C4412	ECHU1C103J	P.CAPACITOR 0.01U	1	
C4413	ECUX1H332KBV	C.CAPACITOR CH 50V 3300P	1	
C4414	ECUX1H102JV	C.CAPACITOR CH 50V 1000P	1	
C4415	ECUX1H122KBV	C.CAPACITOR CH 50V 1200P	1	
C4416	ECUX1H102JV	C.CAPACITOR CH 50V 1000P	1	
C4417	ECEV1EN4R7	E.CAPACITOR 25V 4.7U	1	
C4419	ECUX1H103KBV	C.CAPACITOR CH 50V 0.01P	1	
C4420	ECUX1H101JCV	C.CAPACITOR CH 50V 100P	1	
C4421,22	ECUX1H103KBV	C.CAPACITOR CH 50V 0.01P	2	
C4423	ECUX1H220JCV	C.CAPACITOR CH 50V 22P	1	
C4424,25	ECUX1H391JCV	C.CAPACITOR CH 50V 390P	2	
C4426	ECUM1C105ZFN	C.CAPACITOR CH 16V 1U	1	
C4427	ECEV1CV100	E.CAPACITOR 16V 10U	1	
C4428	ECUM1C105ZFN	C.CAPACITOR CH 16V 1U	1	
C4429	ECUM1C105KBM	C.CAPACITOR CH 16V 1U	1	
C4431	ECEV1EN4R7	E.CAPACITOR 25V 4.7U	1	
C4432	ECUX1H152KBV	C.CAPACITOR CH 50V 1500P	1	
C4501	ECEV1CV470	E.CAPACITOR 16V 47U	1	
C4502	ECUX1E104ZFV	C.CAPACITOR CH 25V 0.001U	1	
C4503	ECUM1C105ZFN	C.CAPACITOR CH 16V 1U	1	
C4504	ECEV0JV470	E.CAPACITOR 6.3V 47U	1	
C4505	ECEV1CV470	E.CAPACITOR 16V 47U	1	
C4506	ECUM1C105KBM	C.CAPACITOR CH 16V 1U	1	
C4507	ECEV1CV100	E.CAPACITOR 16V 10U	1	
C4508	ECEV0JV101	E.CAPACITOR 6.3V 100U	1	
C4509	ECUX1E104ZFV	C.CAPACITOR CH 25V 0.001U	1	
C4510	ECEV1CV470	E.CAPACITOR 16V 47U	1	
C4511,12	ECUM1C105ZFN	C.CAPACITOR CH 16V 1U	2	
C4513	ECUM1C105KBM	C.CAPACITOR CH 16V 1U	1	
C4514	ECUM1H223KBM	C.CAPACITOR CH 50V 0.022U	1	
C4515	ECUX1H102JV	C.CAPACITOR CH 50V 1000P	1	
C4516	ECEV1CV100	E.CAPACITOR 16V 10U	1	
C4517	VCC0040	C.CAPACITOR	1	
C4518	ECUX1E104ZFV	C.CAPACITOR CH 25V 0.001U	1	
C4519	ECEV0JA331	E.CAPACITOR 6.3V 330U	1	
C4520	ECEV0JV101	E.CAPACITOR 6.3V 100U	1	
C4521	ECEV1EV4R7	E.CAPACITOR 25V 4.7U	1	
C4601	ECEV1CV470	E.CAPACITOR 16V 47U	1	
C4602	ECUX1E104ZFV	C.CAPACITOR CH 25V 0.001U	1	
C4603	ECEV0JV470	E.CAPACITOR 6.3V 47U	1	
C4607	ECUX1H331JCV	C.CAPACITOR CH 50V 330P	1	
C4608	ECUM1E104KBM	C.CAPACITOR CH 25V 0.1U	1	
C4609,10	ECHU1C104J	P.CAPACITOR 0.001U	2	
C4611	ECUX1H103KBV	C.CAPACITOR CH 50V 0.01P	1	
C4612	ECEV0JV101	E.CAPACITOR 6.3V 100U	1	
C4613	ECUX1E104ZFV	C.CAPACITOR CH 25V 0.001U	1	
C4614,15	ECUX1H103KBV	C.CAPACITOR CH 50V 0.01P	2	
C4616	ECEV1CV100	E.CAPACITOR 16V 10U	1	
C4617-19	ECEV1CV470	E.CAPACITOR 16V 47U	3	

Ref.No.	Part No.	Part Name & Description	Pcs	Remarks
C4620	ECEV1CV100	E.CAPACITOR 16V 10U	1	
C4621	ECEV1CV220	E.CAPACITOR 16V 22U	1	
C4622	ECUX1E104ZFV	C.CAPACITOR CH 25V 0.001U	1	
C4623	ECEV1CV100	E.CAPACITOR 16V 10U	1	
C4624	ECUX1E104ZFV	C.CAPACITOR CH 25V 0.001U	1	
C4625	ECEV1CV220	E.CAPACITOR 16V 22U	1	
C4626	ECUX1E104ZFV	C.CAPACITOR CH 25V 0.001U	1	
C4627	ECUX1H103KBV	C.CAPACITOR CH 50V 0.01P	1	
C4628	ECUX1H050CCV	C.CAPACITOR CH 50V 5P	1	
C4629	ECHU1C683JB	P.CAPACITOR 16V 0.068U	1	
C4701,02	ECEV0JV470	E.CAPACITOR 6.3V 47U	2	
C4703	ECUX1E104ZFV	C.CAPACITOR CH 25V 0.001U	1	
C4704	ECUX1H822KBV	C.CAPACITOR CH 50V 8200P	1	
C4705	ECUX1H102JV	C.CAPACITOR CH 50V 1000P	1	
C4706	ECUX1E104ZFV	C.CAPACITOR CH 25V 0.001U	1	
C4707	ECUM1C105KBM	C.CAPACITOR CH 16V 1U	1	
C6002	ECUM1C105ZFN	C.CAPACITOR CH 16V 1U	1	
C6003	ECUX1E104ZFV	C.CAPACITOR CH 25V 0.001U	1	
C6004	ECUX1H120JCV	C.CAPACITOR CH 50V 12P	1	
C6005,06	ECUM1C105ZFN	C.CAPACITOR CH 16V 1U	2	
C6010	ECUM1H273KBN	C.CAPACITOR CH 50V 0.027U	1	
C6011	ECUX1H102JV	C.CAPACITOR CH 50V 1000P	1	
C6014	ECEV0JV330	E.CAPACITOR 6.3V 33U	1	
C6017	ECEV0JV330	E.CAPACITOR 6.3V 33U	1	
C6018,19	ECUM1C105KBM	C.CAPACITOR CH 16V 1U	2	
C6020,21	ECEV1CV100	E.CAPACITOR 16V 10U	2	
C6022	ECUM1H223KBN	C.CAPACITOR CH 50V 0.022U	1	
C6024	ECUX1H561JCV	C.CAPACITOR CH 50V 560P	1	
C6025	ECUX1H120JCV	C.CAPACITOR CH 50V 12P	1	
C6026-28	ECUX1H103KBV	C.CAPACITOR CH 50V 0.01P	3	
C6031	ECUM1C105ZFN	C.CAPACITOR CH 16V 1U	1	
C6032	ECEV0JV330	E.CAPACITOR 6.3V 33U	1	
C6035	ECUX1H103KBV	C.CAPACITOR CH 50V 0.01P	1	
C6036	ECUM1E104KBN	C.CAPACITOR CH 25V 0.1U	1	
C6037	ECEV1CV100	E.CAPACITOR 16V 10U	1	
C6038	ECEV1CV470	E.CAPACITOR 16V 47U	1	
C6040	ECUX1H103KBV	C.CAPACITOR CH 50V 0.01P	1	
C6042	ECEV1CV100	E.CAPACITOR 16V 10U	1	
C6501,02	ECUX1H330JCV	C.CAPACITOR CH 50V 33P	2	
C6503-05	ECUX1E104ZFV	C.CAPACITOR CH 25V 0.001U	3	
C6506,07	ECUX1H120JCV	C.CAPACITOR CH 50V 12P	2	
C6508	ECUX1E104ZFV	C.CAPACITOR CH 25V 0.001U	1	
C6509	ECUX1H330JCV	C.CAPACITOR CH 50V 33P	1	
C6511	ECUX1H050CCV	C.CAPACITOR CH 50V 5P	1	
C6512	ECUX1E104ZFV	C.CAPACITOR CH 25V 0.001U	1	
C6514	ECUX1E104ZFV	C.CAPACITOR CH 25V 0.001U	1	
C6516-22	ECUX1E104ZFV	C.CAPACITOR CH 25V 0.001U	7	
C6523	ECEV0JV330	E.CAPACITOR 6.3V 33U	1	
C6524	ECEV1CV100	E.CAPACITOR 16V 10U	1	
C6525	ECUM1E104KBN	C.CAPACITOR CH 25V 0.1U	1	
C6527-30	ECUX1E104ZFV	C.CAPACITOR CH 25V 0.001U	4	
C6531,32	ECUX1H221JCV	C.CAPACITOR CH 50V 220P	2	
C6534-37	ECUX1H103KBV	C.CAPACITOR CH 50V 0.01P	4	
C6801	ECUX1H060DCV	C.CAPACITOR CH 50V 6P	1	
C6803	ECUX1H050CCV	C.CAPACITOR CH 50V 5P	1	
C6804	ECUX1H270JCV	C.CAPACITOR CH 50V 27P	1	
C6805	ECUX1H220JCV	C.CAPACITOR CH 50V 22P	1	
C6806-11	ECUX1E104ZFV	C.CAPACITOR CH 25V 0.001U	6	
C6812,13	ECUX1H100DCV	C.CAPACITOR CH 50V 10P	2	
C6814	ECUX1H103KBV	C.CAPACITOR CH 50V 0.01P	1	
C6815	ECUX1E104ZFV	C.CAPACITOR CH 25V 0.001U	1	
C6816	ECEV1CV100	E.CAPACITOR 16V 10U	1	
C6817	ECUX1H103KBV	C.CAPACITOR CH 50V 0.01P	1	
C6818	ECEV0JV470	E.CAPACITOR 6.3V 47U	1	
C6819	ECUX1H103KBV	C.CAPACITOR CH 50V 0.01P	1	
C6820	ECEV0JV470	E.CAPACITOR 6.3V 47U	1	
C6822	ECUX1E104ZFV	C.CAPACITOR CH 25V 0.001U	1	
C6826	ECUM1C105KBM	C.CAPACITOR CH 16V 1U	1	
C6827	ECUM1E104KBN	C.CAPACITOR CH 25V 0.1U	1	
C6828	ECUX1H102JV	C.CAPACITOR CH 50V 1000P	1	
CN6001	VJP3507A080	CONNECTOR (MALE)	1	

Ref.No.	Part No.	Part Name & Description	Pcs	Remarks
D4101,02	MA728	DIODE	2	<R>
D4201,02	MA728	DIODE	2	<R>
D4301	MA143	DIODE	1	<R>
D4401	MA143	DIODE	1	<R>
D4501	MA142WA	DIODE	1	<R>
D4502	MA143	DIODE	1	<R>
D4503	MA141K	DIODE	1	<R>
D4601	MA143	DIODE	1	<R>
D4602,03	MA142WK	DIODE	2	<R>
D4604,05	MA141K	DIODE	2	<R>
D4701	MA143	DIODE	1	<R>
D6001	MA141K	DIODE	1	<R>
D6003,04	MA141K	DIODE	2	<R>
D6006,07	MA141K	DIODE	2	<R>
D6504	MA728	DIODE	1	<R>
D6506-08	MA728	DIODE	3	<R>
D6511-14	MA728	DIODE	4	<R>
D6515	MA143	DIODE	1	<R>
D6801,02	MA141K	DIODE	2	<R>
D6803	MA8024	DIODE	1	<R>
D6804	MA143	DIODE	1	<R>
FL4101	VLF1069	FILTER	1	
FL4102	VLF1070	FILTER	1	
FL4201	VLF1069	FILTER	1	
FL4202	VLF1070	FILTER	1	
FL4301	VLF0934	FILTER	1	
FL4401	VLF0935	FILTER	1	
FL4501	VLT0729	FILTER	1	
IC4101	LA7285M	IC	1	
IC4102	UPC4558G2	IC	1	<R>
IC4201	LA7285M	IC	1	
IC4202	UPC4558G2	IC	1	<R>
IC4501	UPC5021GA069	IC	1	<R>
IC4502	CXA1102M	IC	1	<R>
IC4503	MC14053BF	IC	1	<R>
IC4601	BA7703K1	IC	1	<R>
IC4602	NJM2123V	IC	1	<R>
IC4603	UPC4558G2	IC	1	<R>
IC4604	MC14577BF	IC	1	<R>
IC4701	UPC4558G2	IC	1	<R>
IC6001	VSI1653A	IC	1	
IC6002	MN12821R	IC	1	<R>
IC6004	UPC393G2	IC	1	<R>
IC6501	VSI1424A	IC	1	<R>
IC6502	S8420BF	IC	1	<R>
IC6503	UPD6456T611Y	IC	1	<R>
IC6505	TC7W04F	IC	1	<R>
IC6506	TC7S08F	IC	1	<R>
IC6801	MN51040VPI	IC	1	<R>
IC6803	UPC319G2	IC	1	<R>
IC6804	UPC393G2	IC	1	<R>
L4101	VLQ0423J153	COIL 15000UH	1	
L4201	VLQ0423J153	COIL 15000UH	1	
L4301	VLQ0319K101	COIL 100UH	1	
L4401	VLQ0319K101	COIL 100UH	1	
L4402	VLQ0426J560	COIL 56UH	1	
L4502,03	VLQ0319K101	COIL 100UH	2	
L4601	VLQ0319K101	COIL 100UH	1	
L4602	MA178	COIL	1	
L4603,04	VLQ0319K101	COIL 100UH	2	
L4701	VLQ0319K470	COIL 47UH	1	
L6001	VLQ0319K470	COIL 47UH	1	
L6002	VLQ0319K100	COIL 10UH	1	
L6003	VLQ0319K470	COIL 47UH	1	

Ref.No.	Part No.	Part Name & Description	Pcs	Remarks
L6502	VLQ0163J330	COIL 33UH	1	
L6801	VLQ0163J221	COIL 220UH	1	
L6802	VLQ0163J470	COIL 47UH	1	
L6803	VLQ0319K101	COIL 100UH	1	
P4001	VJS29590010	CONNECTOR (FEMALE)	1	
P6002-04	VJS3406D026	CONNECTOR (FEMALE)	3	
Q4101-04	2SD1819A-R	TRANSISTOR	4	<R>
Q4105,06	2SD1824	TRANSISTOR	2	<R>
Q4107	2SB1220-R	TRANSISTOR	1	<R>
Q4108	2SB1219A-R	TRANSISTOR	1	<R>
Q4201-04	2SD1819A-R	TRANSISTOR	4	<R>
Q4205,06	2SD1824	TRANSISTOR	2	<R>
Q4207	2SB1220-R	TRANSISTOR	1	<R>
Q4208	2SB1219A-R	TRANSISTOR	1	<R>
Q4301	2SD1979	TRANSISTOR	1	<R>
Q4401	2SD1979	TRANSISTOR	1	<R>
Q4501,02	2SB970X	TRANSISTOR	2	<R>
Q4503	2SD874-R	TRANSISTOR	1	<R>
Q4504	2SD1819A-R	TRANSISTOR	1	<R>
Q4601	2SD1819A-R	TRANSISTOR	1	<R>
Q4603	2SB1219A-R	TRANSISTOR	1	<R>
Q4604	2SD1819A-R	TRANSISTOR	1	<R>
Q4605,06	2SB970X	TRANSISTOR	2	<R>
Q4701	2SD1819A-R	TRANSISTOR	1	<R>
Q6001	2SD1819A-R	TRANSISTOR	1	<R>
Q6003	2SD1820-R	TRANSISTOR	1	<R>
Q6501	2SD1819A-R	TRANSISTOR	1	<R>
QR4101,02	UN5215	TRANSISTOR-RESISTOR	2	<R>
QR4103	UN5213	TRANSISTOR	1	<R>
QR4201,02	UN5215	TRANSISTOR-RESISTOR	2	<R>
QR4203	UN5213	TRANSISTOR	1	<R>
QR4501	UN5213	TRANSISTOR	1	<R>
QR4502	UN5115	TRANSISTOR-RESISTOR	1	
QR4503-07	UN5213	TRANSISTOR	5	<R>
QR4508	UN5113	TRANSISTOR-RESISTOR	1	<R>
QR4510	UN5213	TRANSISTOR	1	<R>
QR4511	UN511F	TRANSISTOR-RESISTOR	1	<R>
QR4512,13	UN5213	TRANSISTOR	2	<R>
QR4601	UN5213	TRANSISTOR	1	<R>
QR4603	UN5213	TRANSISTOR	1	<R>
QR4604	UN5211	TRANSISTOR-RESISTOR	1	<R>
QR4605,06	UN5213	TRANSISTOR	2	<R>
QR4607	UN5211	TRANSISTOR-RESISTOR	1	<R>
QR4701-04	UN5213	TRANSISTOR	4	<R>
QR6001	UN5213	TRANSISTOR	1	<R>
QR6002,03	UN5114	TRANSISTOR-RESISTOR	2	<R>
QR6501,02	UN5213	TRANSISTOR	2	<R>
QR6503-05	UN5114	TRANSISTOR-RESISTOR	3	<R>
QR6512	UN5211	TRANSISTOR-RESISTOR	1	<R>
QR6513-16	UN5114	TRANSISTOR-RESISTOR	4	<R>
QR6517	UN5213	TRANSISTOR	1	<R>
		RESISTORS		
R4101	ERJ3GEYJ104	M.RESISTOR CH 3W 100K	1	
R4102	ERJ3GEYJ103	M.RESISTOR CH 3W 10K	1	
R4103	ERJ3GEYJ470	M.RESISTOR CH 3W 47	1	
R4104	ERJ3GEYJ155	M.RESISTOR CH 3W 1.5M	1	
R4105	ERJ3GEYJ472	M.RESISTOR CH 3W 4.7K	1	
R4106	ERJ3GEYJ183	M.RESISTOR CH 3W 18K	1	
R4107	ERJ3GEYJ123	M.RESISTOR CH 3W 12K	1	
R4108	ERJ3GEYJ820	M.RESISTOR CH 3W 82	1	
R4109	ERJ3GEYJ103	M.RESISTOR CH 3W 10K	1	
R4110	ERJ3GEYJ470	M.RESISTOR CH 3W 47	1	
R4111	ERJ3GEYJ104	M.RESISTOR CH 3W 100K	1	

Ref.No.	Part No.	Part Name & Description	Pcs	Remarks
R4112	ERJ3GEY0R00	M.RESISTOR CH 1/16W 0	1	
R4113	ERJ3GEYJ103	M.RESISTOR CH 3W 10K	1	
R4114	ERJ3GEYJ822	M.RESISTOR CH 3W 8.2K	1	
R4115	VRE0034E562	M.RESISTOR CH 1/10W 5.6K	1	
R4116	VRE0034E152	M.RESISTOR CH 1/10W 1.5K	1	
R4117	ERJ3GEYJ100	M.RESISTOR CH 3W 10	1	
R4118	ERJ3GEYJ683	M.RESISTOR CH 3W 68K	1	
R4119	ERJ3GEYJ121	M.RESISTOR CH 3W 120	1	
R4120	ERJ3GEYJ334	M.RESISTOR CH 3W 330K	1	
R4121	ERJ3GEYJ472	M.RESISTOR CH 3W 4.7K	1	
R4122	ERJ3GEYJ683	M.RESISTOR CH 3W 68K	1	
R4123	ERJ3GEYJ102	M.RESISTOR CH 3W 1K	1	
R4124	ERJ3GEYJ104	M.RESISTOR CH 3W 100K	1	
R4125	ERJ3GEYJ222	M.RESISTOR CH 3W 2.2K	1	
R4126	ERJ3GEY0R00	M.RESISTOR CH 1/16W 0	1	
R4127,28	ERJ3GEYJ104	M.RESISTOR CH 3W 100K	2	
R4129	ERJ3GEYJ101	M.RESISTOR CH 3W 100	1	
R4130	ERJ3GEYJ221	M.RESISTOR CH 3W 220	1	
R4131	ERJ3GEY0R00	M.RESISTOR CH 1/16W 0	1	
R4132	ERJ3GEYJ153	M.RESISTOR CH 3W 15K	1	
R4133	ERJ3GEYJ223	M.RESISTOR CH 3W 22K	1	
R4136	ERJ3GEYJ222	M.RESISTOR CH 3W 2.2K	1	
R4137	ERJ3GEYJ392	M.RESISTOR CH 3W 3.9K	1	
R4138	ERJ3GEYJ331	M.RESISTOR CH 3W 330	1	
R4139	ERJ3GEYJ223	M.RESISTOR CH 3W 22K	1	
R4140	ERJ3GEY0R00	M.RESISTOR CH 1/16W 0	1	
R4141	ERJ3GEYJ221	M.RESISTOR CH 3W 220	1	
R4146	ERJ3GEYJ102	M.RESISTOR CH 3W 1K	1	
R4148	ERJ3GEYJ472	M.RESISTOR CH 3W 4.7K	1	
R4149	ERJ3GEYJ561	M.RESISTOR CH 3W 560	1	
R4150-52	ERJ3GEYJ103	M.RESISTOR CH 3W 10K	3	
R4153,54	ERJ3GEYJ104	M.RESISTOR CH 3W 100K	2	
R4155	ERJ3GEYJ471	M.RESISTOR CH 3W 470	1	
R4201	ERJ3GEYJ104	M.RESISTOR CH 3W 100K	1	
R4202	ERJ3GEYJ103	M.RESISTOR CH 3W 10K	1	
R4203	ERJ3GEYJ470	M.RESISTOR CH 3W 47	1	
R4204	ERJ3GEYJ155	M.RESISTOR CH 3W 1.5M	1	
R4205	ERJ3GEYJ472	M.RESISTOR CH 3W 4.7K	1	
R4206	ERJ3GEYJ183	M.RESISTOR CH 3W 18K	1	
R4207	ERJ3GEYJ123	M.RESISTOR CH 3W 12K	1	
R4208	ERJ3GEYJ820	M.RESISTOR CH 3W 82	1	
R4209	ERJ3GEYJ103	M.RESISTOR CH 3W 10K	1	
R4210	ERJ3GEYJ470	M.RESISTOR CH 3W 47	1	
R4211	ERJ3GEYJ104	M.RESISTOR CH 3W 100K	1	
R4212	ERJ3GEY0R00	M.RESISTOR CH 1/16W 0	1	
R4213	ERJ3GEYJ103	M.RESISTOR CH 3W 10K	1	
R4214	ERJ3GEYJ822	M.RESISTOR CH 3W 8.2K	1	
R4215	VRE0034E562	M.RESISTOR CH 1/10W 5.6K	1	
R4216	VRE0034E152	M.RESISTOR CH 1/10W 1.5K	1	
R4217	ERJ3GEYJ100	M.RESISTOR CH 3W 10	1	
R4218	ERJ3GEYJ683	M.RESISTOR CH 3W 68K	1	
R4219	ERJ3GEYJ121	M.RESISTOR CH 3W 120	1	
R4220	ERJ3GEYJ334	M.RESISTOR CH 3W 330K	1	
R4221	ERJ3GEYJ472	M.RESISTOR CH 3W 4.7K	1	
R4222	ERJ3GEYJ683	M.RESISTOR CH 3W 68K	1	
R4223	ERJ3GEYJ102	M.RESISTOR CH 3W 1K	1	
R4224	ERJ3GEYJ104	M.RESISTOR CH 3W 100K	1	
R4225	ERJ3GEYJ222	M.RESISTOR CH 3W 2.2K	1	
R4226	ERJ3GEY0R00	M.RESISTOR CH 1/16W 0	1	
R4227,28	ERJ3GEYJ104	M.RESISTOR CH 3W 100K	2	
R4229	ERJ3GEYJ101	M.RESISTOR CH 3W 100	1	
R4230	ERJ3GEYJ221	M.RESISTOR CH 3W 220	1	
R4231	ERJ3GEY0R00	M.RESISTOR CH 1/16W 0	1	
R4232	ERJ3GEYJ153	M.RESISTOR CH 3W 15K	1	
R4233	ERJ3GEYJ223	M.RESISTOR CH 3W 22K	1	
R4234,35	ERJ3GEYJ104	M.RESISTOR CH 3W 100K	2	
R4236	ERJ3GEYJ222	M.RESISTOR CH 3W 2.2K	1	
R4237	ERJ3GEYJ392	M.RESISTOR CH 3W 3.9K	1	
R4238	ERJ3GEYJ331	M.RESISTOR CH 3W 330	1	
R4239	ERJ3GEYJ223	M.RESISTOR CH 3W 22K	1	
R4240	ERJ3GEY0R00	M.RESISTOR CH 1/16W 0	1	
R4241	ERJ3GEYJ221	M.RESISTOR CH 3W 220	1	
R4243-45	ERJ3GEYJ104	M.RESISTOR CH 3W 100K	3	
R4246	ERJ3GEYJ102	M.RESISTOR CH 3W 1K	1	
R4248	ERJ3GEYJ472	M.RESISTOR CH 3W 4.7K	1	

Ref.No.	Part No.	Part Name & Description	Pcs	Remarks
R4249	ERJ3GEYJ561	M.RESISTOR CH 3W 560	1	
R4250-52	ERJ3GEYJ103	M.RESISTOR CH 3W 10K	3	
R4253,54	ERJ3GEYJ104	M.RESISTOR CH 3W 100K	2	
R4255	ERJ3GEYJ471	M.RESISTOR CH 3W 470	1	
R4301,02	ERJ3GEY0R00	M.RESISTOR CH 1/16W 0	2	
R4303	VRE0034E821	M.RESISTOR CH 1/10W 820	1	
R4304	VRE0034E681	M.RESISTOR CH 1/10W 680	1	
R4305	VRE0034E821	M.RESISTOR CH 1/10W 820	1	
R4306	VRE0034E112	M.RESISTOR CH 1/10W 1.1K	1	
R4307	VRE0034E103	M.RESISTOR CH 1/10W 10K	1	
R4308	VRE0034E183	M.RESISTOR CH 1/10W 18K	1	
R4309	VRE0034E562	M.RESISTOR CH 1/10W 5.6K	1	
R4310	ERJ3GEYJ104	M.RESISTOR CH 3W 100K	1	
R4311	VRE0034E303	M.RESISTOR CH 1/10W 30K	1	
R4312	VRE0034E123	M.RESISTOR CH 1/10W 12K	1	
R4313	ERJ3GEYJ103	M.RESISTOR CH 3W 10K	1	
R4314,15	ERJ3GEYJ102	M.RESISTOR CH 3W 1K	2	
R4316,17	ERJ3GEYJ104	M.RESISTOR CH 3W 100K	2	
R4318	ERJ3GEYJ103	M.RESISTOR CH 3W 10K	1	
R4319	ERJ3GEYJ272	M.RESISTOR CH 3W 2.7K	1	
R4320	ERJ3GEYJ220	M.RESISTOR CH 3W 22	1	
R4321	ERJ3GEYJ331	M.RESISTOR CH 3W 330	1	
R4322	ERJ3GEYJ223	M.RESISTOR CH 3W 22K	1	
R4323	ERJ3GEYJ102	M.RESISTOR CH 3W 1K	1	
R4324	ERJ3GEYG103	M.RESISTOR CH 3W 10K	1	
R4325	ERJ3GEYG823	M.RESISTOR CH 3W 82K	1	
R4326	ERJ3GEYG683	M.RESISTOR CH 3W 68K	1	
R4327	ERJ3GEYJ393	M.RESISTOR CH 3W 39K	1	
R4401,02	ERJ3GEY0R00	M.RESISTOR CH 1/16W 0	2	
R4403	VRE0034E821	M.RESISTOR CH 1/10W 820	1	
R4404	VRE0034E681	M.RESISTOR CH 1/10W 680	1	
R4405	VRE0034E821	M.RESISTOR CH 1/10W 820	1	
R4406	VRE0034E112	M.RESISTOR CH 1/10W 1.1K	1	
R4407	VRE0034E103	M.RESISTOR CH 1/10W 10K	1	
R4408	VRE0034E183	M.RESISTOR CH 1/10W 18K	1	
R4409	VRE0034E562	M.RESISTOR CH 1/10W 5.6K	1	
R4410	ERJ3GEYJ104	M.RESISTOR CH 3W 100K	1	
R4411	VRE0034E303	M.RESISTOR CH 1/10W 30K	1	
R4412	VRE0034E822	M.RESISTOR CH 1/10W 8.2K	1	
R4413	ERJ3GEYJ332	M.RESISTOR CH 3W 3.3K	1	
R4414,15	ERJ3GEYJ102	M.RESISTOR CH 3W 1K	2	
R4416,17	ERJ3GEYJ104	M.RESISTOR CH 3W 100K	2	
R4418	ERJ3GEYJ103	M.RESISTOR CH 3W 10K	1	
R4419	ERJ3GEYJ272	M.RESISTOR CH 3W 2.7K	1	
R4420	ERJ3GEYJ220	M.RESISTOR CH 3W 22	1	
R4421	ERJ3GEYJ331	M.RESISTOR CH 3W 330	1	
R4422	ERJ3GEYJ223	M.RESISTOR CH 3W 22K	1	
R4423	ERJ3GEYJ102	M.RESISTOR CH 3W 1K	1	
R4424	ERJ3GEYG103	M.RESISTOR CH 3W 10K	1	
R4425	ERJ3GEYG823	M.RESISTOR CH 3W 82K	1	
R4426	ERJ3GEYG683	M.RESISTOR CH 3W 68K	1	
R4427	ERJ3GEYJ393	M.RESISTOR CH 3W 39K	1	
R4501	ERJ3GEYJ103	M.RESISTOR CH 3W 10K	1	
R4502	ERJ3GEYJ224	M.RESISTOR CH 3W 220K	1	
R4503	ERJ3GEYJ333	M.RESISTOR CH 3W 33K	1	
R4504	ERJ3GEYJ103	M.RESISTOR CH 3W 10K	1	
R4505	ERJ3GEYJ332	M.RESISTOR CH 3W 3.3K	1	
R4506	ERJ3GEYJ472	M.RESISTOR CH 3W 4.7K	1	
R4507	ERJ3GEYJ562	M.RESISTOR CH 3W 5.6K	1	
R4508	ERJ3GEYJ473	M.RESISTOR CH 3W 47K	1	
R4509	ERJ3GEYJ472	M.RESISTOR CH 3W 4.7K	1	
R4510	ERJ3GEYJ104	M.RESISTOR CH 3W 100K	1	
R4512	ERJ3GEY0R00	M.RESISTOR CH 1/16W 0	1	
R4513	VRE0034E433	M.RESISTOR CH 1/10W 43K	1	
R4514	ERJ3GEYJ562	M.RESISTOR CH 3W 5.6K	1	
R4515	ERJ3GEYJ473	M.RESISTOR CH 3W 47K	1	
R4516	ERJ3GEYJ103	M.RESISTOR CH 3W 10K	1	
R4517	ERJ3GEYJ153	M.RESISTOR CH 3W 15K	1	
R4518	ERJ3GEYJ104	M.RESISTOR CH 3W 100K	1	
R4519	ERJ3GEYJ473	M.RESISTOR CH 3W 47K	1	
R4520	ERJ3GEYJ394	M.RESISTOR CH 3W 390K	1	
R4521	ERJ3GEYJ104	M.RESISTOR CH 3W 100K	1	
R4522	ERJ3GEYJ103	M.RESISTOR CH 3W 10K	1	
R4523	ERJ3GEYJ152	M.RESISTOR CH 3W 1.5K	1	
R4524	ERJ3GEYJ103	M.RESISTOR CH 3W 10K	1	

Ref.No.	Part No.	Part Name & Description	Pcs	Remarks
R4525	ERJ8GCYJ1R0	M.RESISTOR CH 1/8W 1.0	1	
R4526	ERJ3GEYJ183	M.RESISTOR CH 3W 18K	1	
R4527	ERJ3GEYJ390	M.RESISTOR CH 3W 39	1	
R4529	ERJ3GEYJ104	M.RESISTOR CH 3W 100K	1	
R4530	ERJ3GEYJ153	M.RESISTOR CH 3W 15K	1	
R4601	ERJ3GEYJ223	M.RESISTOR CH 3W 22K	1	
R4604	ERJ3GEYJ104	M.RESISTOR CH 3W 100K	1	
R4605	VRE0034E682	M.RESISTOR CH 1/10W 6.8K	1	
R4606	VRE0034E163	M.RESISTOR CH 1/10W 16K	1	
R4607	ERJ3GEYJ105	M.RESISTOR CH 3W 1M	1	
R4609	ERJ3GEYJ223	M.RESISTOR CH 3W 22K	1	
R4610,11	ERJ3GEYJ562	M.RESISTOR CH 3W 5.6K	2	
R4612	ERJ3GEY0R00	M.RESISTOR CH 1/16W 0	1	
R4613	ERJ3GEYJ102	M.RESISTOR CH 3W 1K	1	
R4614	ERJ3GEYJ220	M.RESISTOR CH 3W 22	1	
R4615	ERJ3GEY0R00	M.RESISTOR CH 1/16W 0	1	
R4616	ERJ3GEYJ102	M.RESISTOR CH 3W 1K	1	
R4617	ERJ3GEYJ562	M.RESISTOR CH 3W 5.6K	1	
R4618	ERJ3GEYJ563	M.RESISTOR CH 3W 56K	1	
R4619	ERJ3GEYJ104	M.RESISTOR CH 3W 100K	1	
R4621	VRE0034E682	M.RESISTOR CH 1/10W 6.8K	1	
R4622	VRE0034E912	M.RESISTOR CH 1/10W 9.1K	1	
R4623	ERJ3GEYJ392	M.RESISTOR CH 3W 3.9K	1	
R4626	ERJ3GEYJ822	M.RESISTOR CH 3W 8.2K	1	
R4627,28	ERJ3GEYJ103	M.RESISTOR CH 3W 10K	2	
R4629	ERJ3GEYJ222	M.RESISTOR CH 3W 2.2K	1	
R4630	ERJ3GEYJ152	M.RESISTOR CH 3W 1.5K	1	
R4631,32	ERJ3GEYJ103	M.RESISTOR CH 3W 10K	2	
R4633	ERJ3GEYJ562	M.RESISTOR CH 3W 5.6K	1	
R4634	ERJ3GEYJ392	M.RESISTOR CH 3W 3.9K	1	
R4635	ERJ3GEY0R00	M.RESISTOR CH 1/16W 0	1	
R4703	ERJ3GEYJ103	M.RESISTOR CH 3W 10K	1	
R4704	ERJ3GEYJ472	M.RESISTOR CH 3W 4.7K	1	
R4705	ERJ3GEYJ103	M.RESISTOR CH 3W 10K	1	
R4706	ERJ3GEYJ221	M.RESISTOR CH 3W 220	1	
R4707	ERJ3GEYJ562	M.RESISTOR CH 3W 5.6K	1	
R4708	ERJ3GEYJ330	M.RESISTOR CH 3W 33	1	
R4709	ERJ3GEYJ562	M.RESISTOR CH 3W 5.6K	1	
R4710	ERJ3GEYJ101	M.RESISTOR CH 3W 100	1	
R4711	ERJ3GEYJ104	M.RESISTOR CH 3W 100K	1	
R4712	ERJ3GEYJ102	M.RESISTOR CH 3W 1K	1	
R4713	ERJ3GEYJ823	M.RESISTOR CH 3W 82K	1	
R4714	ERJ3GEYJ183	M.RESISTOR CH 3W 18K	1	
R4715	ERJ3GEYJ334	M.RESISTOR CH 3W 330K	1	
R4716	ERJ3GEYJ103	M.RESISTOR CH 3W 10K	1	
R4720	ERJ3GEY0R00	M.RESISTOR CH 1/16W 0	1	
R4722	ERJ3GEYJ103	M.RESISTOR CH 3W 10K	1	
R6001	ERJ3GEYJ184	M.RESISTOR CH 3W 180K	1	
R6003	ERJ3GEYJ103	M.RESISTOR CH 3W 10K	1	
R6004	ERJ3GEYJ222	M.RESISTOR CH 3W 2.2K	1	
R6005	ERJ3GEYJ103	M.RESISTOR CH 3W 10K	1	
R6006	ERJ3GEYJ562	M.RESISTOR CH 3W 5.6K	1	
R6007,08	ERJ3GEY0R00	M.RESISTOR CH 1/16W 0	2	
R6011-13	ERJ3GEYJ683	M.RESISTOR CH 3W 68K	3	
R6016	ERJ3GEYJ104	M.RESISTOR CH 3W 100K	1	
R6017,18	ERJ3GEYJ683	M.RESISTOR CH 3W 68K	2	
R6019	ERJ3GEYJ102	M.RESISTOR CH 3W 1K	1	
R6020,21	ERJ3GEYJ103	M.RESISTOR CH 3W 10K	2	
R6022	ERJ3GEYJ102	M.RESISTOR CH 3W 1K	1	
R6023	ERJ3GEYJ104	M.RESISTOR CH 3W 100K	1	
R6024	ERJ3GEYJ683	M.RESISTOR CH 3W 68K	1	
R6027	ERJ3GEYJ223	M.RESISTOR CH 3W 22K	1	
R6028	ERJ3GEYJ114	M.RESISTOR CH 3W 110K	1	
R6029	ERJ3GEYJ181	M.RESISTOR CH 3W 180	1	
R6031,32	ERJ3GEY0R00	M.RESISTOR CH 1/16W 0	2	
R6033,34	ERJ3GEYJ222	M.RESISTOR CH 3W 2.2K	2	
R6036	ERJ3GEYJ103	M.RESISTOR CH 3W 10K	1	
R6040,41	ERJ3GEYJ104	M.RESISTOR CH 3W 100K	2	
R6045-47	ERJ3GEYJ102	M.RESISTOR CH 3W 1K	3	
R6050	ERJ3GEYJ102	M.RESISTOR CH 3W 1K	1	
R6054,55	ERJ3GEYJ104	M.RESISTOR CH 3W 100K	2	
R6057	ERJ3GEYJ103	M.RESISTOR CH 3W 10K	1	
R6059	ERJ8GCYJ271	M.RESISTOR CH 1/8W 270	1	
R6060	ERJ3GEYJ393	M.RESISTOR CH 3W 39K	1	
R6061	ERJ3GEYJ184	M.RESISTOR CH 3W 180K	1	

Ref.No.	Part No.	Part Name & Description	Pcs	Remarks
R6062	ERJ3GEYJ471	M.RESISTOR CH 3W 470	1	
R6063,64	ERJ8GCYJ101	COIL	2	
R6065	ERJ3GEYJ103	M.RESISTOR CH 3W 10K	1	
R6066-68	ERJ8GCYG151	M.RESISTOR CH 1/8W 150	3	
R6070-72	ERJ3GEYJ102	M.RESISTOR CH 3W 1K	3	
R6073	ERJ3GEY0R00	M.RESISTOR CH 1/16W 0	1	
R6076	ERJ3GEY0R00	M.RESISTOR CH 1/16W 0	1	
R6081	ERJ3GEYJ683	M.RESISTOR CH 3W 68K	1	
R6082	ERJ3GEYJ104	M.RESISTOR CH 3W 100K	1	
R6083	ERJ3GEYJ102	M.RESISTOR CH 3W 1K	1	
R6085,86	ERJ3GEY0R00	M.RESISTOR CH 1/16W 0	2	
R6088,89	ERJ3GEYJ103	M.RESISTOR CH 3W 10K	2	
R6090	ERJ3GEYJ102	M.RESISTOR CH 3W 1K	1	
R6091,92	ERJ3GEYJ104	M.RESISTOR CH 3W 100K	2	
R6501-05	ERJ3GEYJ102	M.RESISTOR CH 3W 1K	5	
R6506	ERJ3GEYJ272	M.RESISTOR CH 3W 2.7K	1	
R6507	ERJ3GEYJ101	M.RESISTOR CH 3W 100	1	
R6509	ERJ3GEYJ222	M.RESISTOR CH 3W 2.2K	1	
R6510	ERJ3GEYJ103	M.RESISTOR CH 3W 10K	1	
R6511,12	ERJ3GEYJ222	M.RESISTOR CH 3W 2.2K	2	
R6513	ERJ3GEYJ683	M.RESISTOR CH 3W 68K	1	
R6514	ERJ3GEYJ473	M.RESISTOR CH 3W 47K	1	
R6515	ERJ3GEYJ104	M.RESISTOR CH 3W 100K	1	
R6517-19	ERJ3GEYJ102	M.RESISTOR CH 3W 1K	3	
R6520,21	ERJ3GEYJ683	M.RESISTOR CH 3W 68K	2	
R6522-26	ERJ3GEYJ102	M.RESISTOR CH 3W 1K	5	
R6527-32	ERJ3GEYJ683	M.RESISTOR CH 3W 68K	6	
R6535	ERJ3GEYJ101	M.RESISTOR CH 3W 100	1	
R6536	ERJ3GEYJ102	M.RESISTOR CH 3W 1K	1	
R6537	ERJ3GEYJ472	M.RESISTOR CH 3W 4.7K	1	
R6538	ERJ3GEYJ101	M.RESISTOR CH 3W 100	1	
R6539,40	ERJ3GEYJ102	M.RESISTOR CH 3W 1K	2	
R6541	ERJ3GEYJ223	M.RESISTOR CH 3W 22K	1	
R6542	ERJ3GEYJ104	M.RESISTOR CH 3W 100K	1	
R6543,44	ERJ3GEYJ473	M.RESISTOR CH 3W 47K	2	
R6545	ERJ3GEYJ103	M.RESISTOR CH 3W 10K	1	
R6546	ERJ3GEYJ102	M.RESISTOR CH 3W 1K	1	
R6547	ERJ3GEY0R00	M.RESISTOR CH 1/16W 0	1	
R6548	ERJ3GEYJ101	M.RESISTOR CH 3W 100	1	
R6549	ERJ3GEYJ394	M.RESISTOR CH 3W 390K	1	
R6550	ERJ3GEYJ472	M.RESISTOR CH 3W 4.7K	1	
R6551	VRE0034E433	M.RESISTOR CH 1/10W 43K	1	
R6552	VRE0034E123	M.RESISTOR CH 1/10W 12K	1	
R6553	ERJ3GEYJ472	M.RESISTOR CH 3W 4.7K	1	
R6554	ERJ3GEYJ102	M.RESISTOR CH 3W 1K	1	
R6555	ERJ3GEYJ472	M.RESISTOR CH 3W 4.7K	1	
R6556	ERJ3GEYJ564	M.RESISTOR CH 3W 560K	1	
R6558	ERJ3GEYJ101	M.RESISTOR CH 3W 100	1	
R6559	ERJ3GEYJ472	M.RESISTOR CH 3W 4.7K	1	
R6560-62	ERJ3GEYJ102	M.RESISTOR CH 3W 1K	3	
R6563,64	ERJ3GEYJ683	M.RESISTOR CH 3W 68K	2	
R6565	ERJ3GEYJ102	M.RESISTOR CH 3W 1K	1	
R6566	ERJ3GEYJ101	M.RESISTOR CH 3W 100	1	
R6568	ERJ3GEYJ102	M.RESISTOR CH 3W 1K	1	
R6569	ERJ3GEYJ104	M.RESISTOR CH 3W 100K	1	
R6570	ERJ3GEYJ223	M.RESISTOR CH 3W 22K	1	
R6571	ERJ3GEYJ224	M.RESISTOR CH 3W 220K	1	
R6577,78	ERJ3GEYJ102	M.RESISTOR CH 3W 1K	2	
R6579,80	ERJ3GEYJ104	M.RESISTOR CH 3W 100K	2	
R6581-84	ERJ6GEYJ271	M.RESISTOR CH1/16W 270	4	
R6585	ERJ3GEYJ473	M.RESISTOR CH 3W 47K	1	
R6586	ERJ3GEYJ394	M.RESISTOR CH 3W 390K	1	
R6588	ERJ3GEYJ103	M.RESISTOR CH 3W 10K	1	
R6589	ERJ3GEYJ104	M.RESISTOR CH 3W 100K	1	
R6593	ERJ3GEYJ223	M.RESISTOR CH 3W 22K	1	
R6597	ERJ3GEYJ103	M.RESISTOR CH 3W 10K	1	
R6801	ERJ3GEYJ332	M.RESISTOR CH 3W 3.3K	1	
R6802,03	ERJ3GEYJ272	M.RESISTOR CH 3W 2.7K	2	
R6806	ERJ3GEY0R00	M.RESISTOR CH 1/16W 0	1	
R6808-11	ERJ3GEYJ224	M.RESISTOR CH 3W 220K	4	
R6815	ERJ3GEYJ224	M.RESISTOR CH 3W 220K	1	
R6823	ERJ3GEYJ152	M.RESISTOR CH 3W 1.5K	1	
R6824	ERJ3GEYJ394	M.RESISTOR CH 3W 390K	1	
R6825	ERJ3GEYJ104	M.RESISTOR CH 3W 100K	1	
R6826	ERJ3GEYJ122	M.RESISTOR CH 3W 1.2K	1	

Ref.No.	Part No.	Part Name & Description	Pcs	Remarks
R6827	ERJ3GEYJ104	M.RESISTOR CH 3W 100K	1	
R6828	ERJ3GEYJ103	M.RESISTOR CH 3W 10K	1	
R6829	VRE0034E332	M.RESISTOR CH 1/10W 3.3K	1	
R6830	VRE0034E821	M.RESISTOR CH 1/10W 820	1	
R6831	VRE0034E562	M.RESISTOR CH 1/10W 5.6K	1	
R6842	ERJ3GEYJ222	M.RESISTOR CH 3W 2.2K	1	
R6843	ERJ3GEYJ104	M.RESISTOR CH 3W 100K	1	
R6844	ERJ3GEYJ102	M.RESISTOR CH 3W 1K	1	
R6845	ERJ3GEYJ153	M.RESISTOR CH 3W 15K	1	
R6846	ERJ3GEYJ561	M.RESISTOR CH 3W 560	1	
R6847	ERJ3GEYJ223	M.RESISTOR CH 3W 22K	1	
R6848	ERJ3GEYJ123	M.RESISTOR CH 3W 12K	1	
R6849	ERJ3GEYJ103	M.RESISTOR CH 3W 10K	1	
R6850	ERJ3GEYJ123	M.RESISTOR CH 3W 12K	1	
R6851	ERJ3GEYJ683	M.RESISTOR CH 3W 68K	1	
R6852,53	ERJ3GEYJ102	M.RESISTOR CH 3W 1K	2	
R6854	ERJ3GEYJ105	M.RESISTOR CH 3W 1M	1	
SW6001	VSS0367-08B	SWITCH	1	
SW6501	VSS0367-08B	SWITCH	1	
VC6501	VCV0048	TRIMMER	1	
VR4101	EVM7JGA00B53	V.RESISTOR	1	
VR4102	EVM7JGA00B24	V.RESISTOR	1	
VR4103,04	EVM7JGA00B14	V.RESISTOR	2	
VR4105	EVM7JGA00B24	V.RESISTOR	1	
VR4106	EVM7JGA00B54	V.RESISTOR	1	
VR4201	EVM7JGA00B53	V.RESISTOR	1	
VR4202	EVM7JGA00B24	V.RESISTOR	1	
VR4203,04	EVM7JGA00B14	V.RESISTOR	2	
VR4205	EVM7JGA00B24	V.RESISTOR	1	
VR4206	EVM7JGA00B54	V.RESISTOR	1	
VR4301,02	EVM7JGA00B14	V.RESISTOR	2	
VR4303	EVM7JGA00B24	V.RESISTOR	1	
VR4401,02	EVM7JGA00B14	V.RESISTOR	2	
VR4403	EVM7JGA00B24	V.RESISTOR	1	
VR4601	EVM7JGA00B53	V.RESISTOR	1	
VR6001	EVM7JGA00B15	V.RESISTOR	1	
X6001	VSX0461	CRYSTAL OSCILLATOR	1	<R>
X6501	VSX0499	CRYSTAL OSCILLATOR	1	<R>
X6502	VSX0602	CRYSTAL OSCILLATOR	1	<R>
X6801	VSX0498	CRYSTAL OSCILLATOR	1	<R>
X6802	VSX0615	CRYSTAL OSCILLATOR	1	<R>
		MISCELLANEOUS		
	VMX1183	WASHER	1	
	VMZ2296	INSULATION SHEET	1	
**********	VEP06957A	P.C.BOARD W/COMPONENT		
		MECHA INTERFACE		
P9001	VJP3125D010	CONNECTOR (MALE)	1	
P9002	VJP3125D004	CONNECTOR (MALE)	1	

Ref.No.	Part No.	Part Name & Description	Pcs	Remarks
P9003	VJP3125B003	CONNECTOR (MALE)	1	
P9004	VJP3125B005	CONNECTOR (MALE)	1	
P9005	VJP3172B002	CONNECTOR (MALE)	1	
P9006	VJP3172B003	CONNECTOR (MALE)	1	
P9007	VJP3172B002	CONNECTOR (MALE)	1	
P9008	VJP3125D002	CONNECTOR (MALE)	1	
P9011,12	VJS2907B026	CONNECTOR (FEMALE)	2	
P9013	VJS3406B012	CONNECTOR (FEMALE)	1	
P9014	VJS3406B022	CONNECTOR (FEMALE)	1	
P9015	VJS2958B010	CONNECTOR (FEMALE)	1	
P9016	VJS3406D014	CONNECTOR (FEMALE)	1	
P9017	VJP3172B004	CONNECTOR (MALE)	1	
P9018	VJP3172B003	CONNECTOR (MALE)	1	
P9019	VJP3172B008	CONNECTOR (MALE)	1	
P9020	VJP3125D010	CONNECTOR (MALE)	1	
P9021	VJP3172B002	CONNECTOR (MALE)	1	
		RESISTORS		
R9001	ERJ6GEYJ103	M.RESISTOR CH1/16W 10K	1	
R9002	ERJ6GEYJ472	M.RESISTOR CH1/16W 4.7K	1	
R9003	ERJ6GEY0R00	M.RESISTOR CH 1/10W 0	1	
W1-W5	ERJ6GEY0R00	M.RESISTOR CH 1/10W 0	5	
		MISCELLANEOUS		
E42	VMX2320	CARD SPACER	1	
E43	VMX2321	CARD SPACER	1	
**********	VEP23198B	P.C.BOARD W/COMPONENT		
		PROCESS		
		CAPACITORS		
C3001	ECEV1CV220Q	E.CAPACITOR 16V 22U	1	
C3002	ECUX1E104ZFV	C.CAPACITOR 25V 0.1U	1	
C3003	ECUX1H180JCV	C.CAPACITOR 50V 18P	1	
C3004	ECUX1H680JCV	C.CAPACITOR 50V 68P	1	
C3005-07	ECUX1E104ZFV	C.CAPACITOR 25V 0.1U	3	
C3008,09	ECUX1H103KBV	C.CAPACITOR 50V 0.01U	2	
C3010	ECUX1H151JCV	C.CAPACITOR 50V 150P	1	
C3011	ECUX1H103KBV	C.CAPACITOR 50V 0.01U	1	
C3012	ECUX1E104ZFV	C.CAPACITOR 25V 0.1U	1	
C3013	ECEV1CV220Q	E.CAPACITOR 16V 22U	1	
C3014	ECUX1H330JCV	C.CAPACITOR 50V 33P	1	
C3015	ECUX1E104ZFV	C.CAPACITOR 25V 0.1U	1	
C3016	ECUX1H180JCV	C.CAPACITOR 50V 18P	1	
C3017	ECUX1H470JCV	C.CAPACITOR 50V 47P	1	
C3018,19	ECUX1H101JCV	C.CAPACITOR 50V 100P	2	
C3020	ECUX1H330JCV	C.CAPACITOR 50V 33P	1	
C3023-25	ECUX1E104ZFV	C.CAPACITOR 25V 0.1U	3	
C3026	ECUX1H103KBV	C.CAPACITOR 50V 0.01U	1	
C3027-29	ECUX1E104ZFV	C.CAPACITOR 25V 0.1U	3	
C3030	ECEV0JV330Q	E.CAPACITOR 6.3V 33U	1	
C3031	ECUX1E104ZFV	C.CAPACITOR 25V 0.1U	1	
C3032	ECEV1HNR47Q	E.CAPACITOR 50V 0.47U	1	
C3033	ECUX1H102JV	C.CAPACITOR 50V 1000P	1	
C3034	ECUX1E104ZFV	C.CAPACITOR 25V 0.1U	1	
C3036	ECEV0JV330Q	E.CAPACITOR 6.3V 33U	1	
C3038-40	ECUX1E104ZFV	C.CAPACITOR 25V 0.1U	3	
C3041	ECUX1H103KBV	C.CAPACITOR 50V 0.01U	1	

Ref.No.	Part No.	Part Name & Description	Pcs	Remarks
C3042	ECUX1E104ZFV	C.CAPACITOR 25V 0.1U	1	
C3043	ECEV1HN010Q	E.CAPACITOR 50V 1U	1	
C3044	ECUX1E104ZFV	C.CAPACITOR 25V 0.1U	1	
C3046	ECEV0JV330Q	E.CAPACITOR 6.3V 33U	1	
C3047,48	ECUX1E104ZFV	C.CAPACITOR 25V 0.1U	2	
C3049	ECEV0JV330Q	E.CAPACITOR 6.3V 33U	1	
C3050-52	ECUX1E104ZFV	C.CAPACITOR 25V 0.1U	3	
C3054	ECUX1H820JCV	C.CAPACITOR 50V 82P	1	
C3055	ECEV1CV220Q	E.CAPACITOR 16V 22U	1	
C3056	ECEV1CN100Q	E.CAPACITOR 16V 10U	1	
C3057	ECUX1E104ZFV	C.CAPACITOR 25V 0.1U	1	
C3058	ECUX1H103KBV	C.CAPACITOR 50V 0.01U	1	
C3059,60	ECUX1E104ZFV	C.CAPACITOR 25V 0.1U	2	
C3061	ECEV1EN3R3Q	E.CAPACITOR 25V 3.3U	1	
C3062	ECUX1E104ZFV	C.CAPACITOR 25V 0.1U	1	
C3063	ECUX1H102JV	C.CAPACITOR 50V 1000P	1	
C3064,65	ECUX1H150JCV	C.CAPACITOR 50V 15P	2	
C3066	ECUX1E104ZFV	C.CAPACITOR 25V 0.1U	1	
C3067	ECEV1CV220Q	E.CAPACITOR 16V 22U	1	
C3068	ECUX1H103KBV	C.CAPACITOR 50V 0.01U	1	
C3070	ECUX1E104ZFV	C.CAPACITOR 25V 0.1U	1	
C3071	ECEV1CN100Q	E.CAPACITOR 16V 10U	1	
C3072-77	ECUX1E104ZFV	C.CAPACITOR 25V 0.1U	6	
C3078	ECUX1H330JCV	C.CAPACITOR 50V 33P	1	
C3079,80	ECUX1E104ZFV	C.CAPACITOR 25V 0.1U	2	
C3083-85	ECUX1E104ZFV	C.CAPACITOR 25V 0.1U	3	
C3087-91	ECUX1E104ZFV	C.CAPACITOR 25V 0.1U	5	
C3093	ECUX1E104ZFV	C.CAPACITOR 25V 0.1U	1	
C3095-98	ECUX1E104ZFV	C.CAPACITOR 25V 0.1U	4	
C3099	ECEV0JV330Q	E.CAPACITOR 6.3V 33U	1	
C3101,02	ECUX1H470JCV	C.CAPACITOR 50V 47P	2	
C3103-06	ECUX1E104ZFV	C.CAPACITOR 25V 0.1U	4	
C3108	ECUX1E104ZFV	C.CAPACITOR 25V 0.1U	1	
C3109	ECUX1H561JCV	C.CAPACITOR 50V 560P	1	
C3110,11	ECUX1E104ZFV	C.CAPACITOR 25V 0.1U	2	
C3112	ECUX1H150JCV	C.CAPACITOR 50V 15P	1	
C3113	ECUX1E104ZFV	C.CAPACITOR 25V 0.1U	1	
C3114	ECEV0JV330Q	E.CAPACITOR 6.3V 33U	1	
C3116	ECUX1E104ZFV	C.CAPACITOR 25V 0.1U	1	
C3118	ECUX1E104ZFV	C.CAPACITOR 25V 0.1U	1	
C3119	ECEV0JV330Q	E.CAPACITOR 6.3V 33U	1	
C3120	ECUX1E104ZFV	C.CAPACITOR 25V 0.1U	1	
C3122	ECUX1E104ZFV	C.CAPACITOR 25V 0.1U	1	
C3123-25	ECEV0JV330Q	E.CAPACITOR 6.3V 33U	3	
C3201	ECUX1E104ZFV	C.CAPACITOR 25V 0.1U	1	
C3202	ECEV1CV220Q	E.CAPACITOR 16V 22U	1	
C3203	ECEV0JV330Q	E.CAPACITOR 6.3V 33U	1	
C3205	ECEV0JV330Q	E.CAPACITOR 6.3V 33U	1	
C3207	ECEV0JV330Q	E.CAPACITOR 6.3V 33U	1	
C3209,10	ECUX1H220JCV	C.CAPACITOR 50V 22P	2	
C3211	ECUX1H270JCV	C.CAPACITOR 50V 27P	1	
C3212	ECEV1HN010Q	E.CAPACITOR 50V 1U	1	
C3213	ECUM1E473KBN	C.CAPACITOR CH 25V 0.047U	1	
C3214	ECEV0JV330Q	E.CAPACITOR 6.3V 33U	1	
C3215	ECUX1H470JCV	C.CAPACITOR 50V 47P	1	
C3216	ECUX1E104ZFV	C.CAPACITOR 25V 0.1U	1	
C3217	ECUX1H103KBV	C.CAPACITOR 50V 0.01U	1	
C3218	ECUX1H220JCV	C.CAPACITOR 50V 22P	1	
C3219	ECUX1H100DCV	C.CAPACITOR 50V 10P	1	
C3220	ECEV1HN010Q	E.CAPACITOR 50V 1U	1	
C3221	ECUM1E473KBN	C.CAPACITOR CH 25V 0.047U	1	
C3222	ECEV0JV330Q	E.CAPACITOR 6.3V 33U	1	
C3223	ECUX1H470JCV	C.CAPACITOR 50V 47P	1	
C3224	ECUX1E104ZFV	C.CAPACITOR 25V 0.1U	1	
C3225	ECUX1H103KBV	C.CAPACITOR 50V 0.01U	1	
C3226	ECEV0JV330Q	E.CAPACITOR 6.3V 33U	1	
C3227,28	ECUX1E104ZFV	C.CAPACITOR 25V 0.1U	2	
C3229,30	ECEV0JV330Q	E.CAPACITOR 6.3V 33U	2	
C3231	ECUM1E473KBN	C.CAPACITOR CH 25V 0.047U	1	
C3232	ECUX1E104ZFV	C.CAPACITOR 25V 0.1U	1	
C3233	ECEV0JN470Q	E.CAPACITOR 6.3V 47U	1	
C3234	ECUX1H270JCV	C.CAPACITOR 50V 27P	1	
C3235	ECUX1H150JCV	C.CAPACITOR 50V 15P	1	
C3236	ECUX1H180JCV	C.CAPACITOR 50V 18P	1	
C3238	ECUX1H180JCV	C.CAPACITOR 50V 18P	1	

Ref.No.	Part No.	Part Name & Description	Pcs	Remarks
C3241	ECUX1H560JCV	C.CAPACITOR 50V 56P	1	
C3242	ECUX1H270JCV	C.CAPACITOR 50V 27P	1	
C3243	ECUX1H100DCV	C.CAPACITOR 50V 10P	1	
C3244	ECUX1H270JCV	C.CAPACITOR 50V 27P	1	
C3245,46	ECUX1E104ZFV	C.CAPACITOR 25V 0.1U	2	
C3247	ECEV1CV220Q	E.CAPACITOR 16V 22U	1	
C3259	ECUX1E104ZFV	C.CAPACITOR 25V 0.1U	1	
C3260	ECEV0JV330Q	E.CAPACITOR 6.3V 33U	1	
C3261,62	ECEVGJV101Q	E.CAPACITOR 6.3V 100U	2	
C3401	ECUX1E104ZFV	C.CAPACITOR 25V 0.1U	1	
C3402	ECUX1H102JV	C.CAPACITOR 50V 1000P	1	
C3403	ECEV1HN010Q	E.CAPACITOR 50V 1U	1	
C3404	ECUX1H221JCV	C.CAPACITOR 50V 220P	1	
C3405	ECEV0JV330Q	E.CAPACITOR 6.3V 33U	1	
C3406-10	ECUX1E104ZFV	C.CAPACITOR 25V 0.1U	5	
C3414-17	ECUX1E104ZFV	C.CAPACITOR 25V 0.1U	4	
C3418	ECEV1CV220Q	E.CAPACITOR 16V 22U	1	
C3419	ECUX1E104ZFV	C.CAPACITOR 25V 0.1U	1	
C3420	ECEV0JV330Q	E.CAPACITOR 6.3V 33U	1	
C3421	ECUX1E104ZFV	C.CAPACITOR 25V 0.1U	1	
C3423	ECEV1HNR22Q	E.CAPACITOR 50V 0.22U	1	
C3424	ECUX1E104ZFV	C.CAPACITOR 25V 0.1U	1	
C3426	ECEV1HNR22Q	E.CAPACITOR 50V 0.22U	1	
C3427	ECUX1E104ZFV	C.CAPACITOR 25V 0.1U	1	
C3429	ECEV1HNR22Q	E.CAPACITOR 50V 0.22U	1	
C3430	ECUX1E104ZFV	C.CAPACITOR 25V 0.1U	1	
C3431	ECEV0JV330Q	E.CAPACITOR 6.3V 33U	1	
C3432	ECUX1E104ZFV	C.CAPACITOR 25V 0.1U	1	
C3433,34	ECUX1H103KBV	C.CAPACITOR 50V 0.01U	2	
C3435,36	ECHU1C104J	C.CAPACITOR 16V 0.1U	2	
C3437	ECUX1H103KBV	C.CAPACITOR 50V 0.01U	1	
C3438	ECUX1E104ZFV	C.CAPACITOR 25V 0.1U	1	
C3439	ECUX1H103KBV	C.CAPACITOR 50V 0.01U	1	
C3440	ECUX1E104ZFV	C.CAPACITOR 25V 0.1U	1	
C3447-55	ECUX1E104ZFV	C.CAPACITOR 25V 0.1U	9	
C3456-59	ECHU1C104J	C.CAPACITOR 16V 0.1U	4	
C3460	ECUX1H103KBV	C.CAPACITOR 50V 0.01U	1	
C3461	ECEV0JV330Q	E.CAPACITOR 6.3V 33U	1	
C3462,63	ECUX1E104ZFV	C.CAPACITOR 25V 0.1U	2	
C3464	ECUX1H103KBV	C.CAPACITOR 50V 0.01U	1	
C3465-68	ECEV0JV330Q	E.CAPACITOR 6.3V 33U	4	
C3469	ECUX1E104ZFV	C.CAPACITOR 25V 0.1U	1	
C3470	ECEV0JV330Q	E.CAPACITOR 6.3V 33U	1	
C3471	ECUX1E104ZFV	C.CAPACITOR 25V 0.1U	1	
C3475-78	ECUX1H103KBV	C.CAPACITOR 50V 0.01U	4	
C3479	ECUX1E104ZFV	C.CAPACITOR 25V 0.1U	1	
C3480	ECEV0JV330Q	E.CAPACITOR 6.3V 33U	1	
C3481	ECUX1E104ZFV	C.CAPACITOR 25V 0.1U	1	
C3482	VCEA0JAP470	E.CAPACITOR 6.3V 47U	1	
C3483	ECUX1H103KBV	C.CAPACITOR 50V 0.01U	1	
C3484-88	ECUX1E104ZFV	C.CAPACITOR 25V 0.1U	5	
C3489	ECEV0JV330Q	E.CAPACITOR 6.3V 33U	1	
C3490	ECUX1E104ZFV	C.CAPACITOR 25V 0.1U	1	
C3491,92	ECEV0JV330Q	E.CAPACITOR 6.3V 33U	2	
C3494	ECUX1H120JCV	C.CAPACITOR 50V 12P	1	
C3499	ECUX1H120JCV	C.CAPACITOR 50V 12P	1	
C3504	ECUX1H120JCV	C.CAPACITOR 50V 12P	1	
C3508-10	ECEV0JV330Q	E.CAPACITOR 6.3V 33U	3	
C3521-23	ECEV0JV330Q	E.CAPACITOR 6.3V 33U	3	
C3527,28	ECUX1H150JCV	C.CAPACITOR 50V 15P	2	
C3529	ECUX1H391JCV	C.CAPACITOR 50V 390P	1	
C3530	ECUX1H100DCV	C.CAPACITOR 50V 10P	1	
C3531,32	ECUX1H150JCV	C.CAPACITOR 50V 15P	2	
C3533	ECUX1H391JCV	C.CAPACITOR 50V 390P	1	
C3534	ECUX1H100DCV	C.CAPACITOR 50V 10P	1	
C3535,36	ECUX1H150JCV	C.CAPACITOR 50V 15P	2	
C3537	ECUX1H391JCV	C.CAPACITOR 50V 390P	1	
C3538	ECUX1H100DCV	C.CAPACITOR 50V 10P	1	
C3542-44	ECUX1E104ZFV	C.CAPACITOR 25V 0.1U	3	
C3548-50	ECST1VY224Z	T.CAPACITOR 35V 0.22U	3	
C3600	ECUX1E104ZFV	C.CAPACITOR 25V 0.1U	1	
C3602	ECEV1HN010Q	E.CAPACITOR 50V 1U	1	
C3603-07	ECUX1E104ZFV	C.CAPACITOR 25V 0.1U	5	
C3609	ECUX1E104ZFV	C.CAPACITOR 25V 0.1U	1	
C3610	ECEV0JV330Q	E.CAPACITOR 6.3V 33U	1	

Ref.No.	Part No.	Part Name & Description	Pcs	Remarks
C3617	ECUX1E104ZFV	C.CAPACITOR 25V 0.1U	1	
C3618	ECEV0JV330Q	E.CAPACITOR 6.3V 33U	1	
C3619	ECEV1EN3R3Q	E.CAPACITOR 25V 3.3U	1	
C3620-26	ECUX1E104ZFV	C.CAPACITOR 25V 0.1U	7	
C3629-32	ECUX1E104ZFV	C.CAPACITOR 25V 0.1U	4	
C3633	ECEV0JV330Q	E.CAPACITOR 6.3V 33U	1	
C3634-36	ECUX1H471JCV	C.CAPACITOR 50V 470P	3	
C3637-39	ECUX1H391JCV	C.CAPACITOR 50V 390P	3	
C3640-42	ECUX1E104ZFV	C.CAPACITOR 25V 0.1U	3	
C3644	ECEV0JV101Q	E.CAPACITOR 6.3V 100U	1	
C3645	ECUX1E104ZFV	C.CAPACITOR 25V 0.1U	1	
C3701-09	ECEV0JV330Q	E.CAPACITOR 6.3V 33U	9	
C3710-12	ECUX1H100DCV	C.CAPACITOR 50V 10P	3	
C3713	ECUX1E104ZFV	C.CAPACITOR 25V 0.1U	1	
C3714	ECEV0JV330Q	E.CAPACITOR 6.3V 33U	1	
C3715,16	ECUX1E104ZFV	C.CAPACITOR 25V 0.1U	2	
C3717	ECEV0JV330Q	E.CAPACITOR 6.3V 33U	1	
C3718,19	ECUX1E104ZFV	C.CAPACITOR 25V 0.1U	2	
C3720	ECEV0JV330Q	E.CAPACITOR 6.3V 33U	1	
C3721-23	ECUX1E104ZFV	C.CAPACITOR 25V 0.1U	3	
C3724	ECEV0JV330Q	E.CAPACITOR 6.3V 33U	1	
C3725-29	ECUX1E104ZFV	C.CAPACITOR 25V 0.1U	5	
C3730	ECEV0JV330Q	E.CAPACITOR 6.3V 33U	1	
C3731-36	ECUX1E104ZFV	C.CAPACITOR 25V 0.1U	6	
C3737	ECEV1HN010Q	E.CAPACITOR 50V 1U	1	
C3738	ECUX1H103KBV	C.CAPACITOR 50V 0.01U	1	
C3739	ECUX1E104ZFV	C.CAPACITOR 25V 0.1U	1	
C3740	ECEV0JV330Q	E.CAPACITOR 6.3V 33U	1	
C3741-43	ECUX1E104ZFV	C.CAPACITOR 25V 0.1U	3	
C3744	ECUX1H331JCV	C.CAPACITOR 50V 330P	1	
C3753	ECEV0JV330Q	E.CAPACITOR 6.3V 33U	1	
C3754	ECUX1E104ZFV	C.CAPACITOR 25V 0.1U	1	
C3755	ECEV1CV220Q	E.CAPACITOR 16V 22U	1	
C3756-58	ECUX1E104ZFV	C.CAPACITOR 25V 0.1U	3	
C3759	ECUX1H151JCV	C.CAPACITOR 50V 150P	1	
C3760	ECEV0JV330Q	E.CAPACITOR 6.3V 33U	1	
C3761	ECUX1H103KBV	C.CAPACITOR 50V 0.01U	1	
C3762	ECEV0JV330Q	E.CAPACITOR 6.3V 33U	1	
C3763,64	ECUX1E104ZFV	C.CAPACITOR 25V 0.1U	2	
C3765	ECEV0JV330Q	E.CAPACITOR 6.3V 33U	1	
C3766,67	ECUX1E104ZFV	C.CAPACITOR 25V 0.1U	2	
C3768	ECUX1H330JCV	C.CAPACITOR 50V 33P	1	
C3769	ECUX1H271JCV	C.CAPACITOR 50V 270P	1	
C3770	ECEV1CV220Q	E.CAPACITOR 16V 22U	1	
C3771	ECUX1E104ZFV	C.CAPACITOR 25V 0.1U	1	
C3772	ECEV0JV330Q	E.CAPACITOR 6.3V 33U	1	
C3773,74	ECUX1E104ZFV	C.CAPACITOR 25V 0.1U	2	
C3775	ECEV0JV330Q	E.CAPACITOR 6.3V 33U	1	
C3776-79	ECUX1E104ZFV	C.CAPACITOR 25V 0.1U	4	
C3780	ECUX1H100DCV	C.CAPACITOR 50V 10P	1	
C3781	ECUX1H270JCV	C.CAPACITOR 50V 27P	1	
C3782	ECUX1H100DCV	C.CAPACITOR 50V 10P	1	
C3783	ECUX1H270JCV	C.CAPACITOR 50V 27P	1	
C3787	ECEV1HN010Q	E.CAPACITOR 50V 1U	1	
C3790-94	ECUX1E104ZFV	C.CAPACITOR 25V 0.1U	5	
C3795	ECEV0JV330Q	E.CAPACITOR 6.3V 33U	1	
C3796-99	ECUX1E104ZFV	C.CAPACITOR 25V 0.1U	4	
C3801	ECUX1H331JCV	C.CAPACITOR 50V 330P	1	
C3803-06	ECUX1E104ZFV	C.CAPACITOR 25V 0.1U	4	
C3807,08	ECUX1H151JCV	C.CAPACITOR 50V 150P	2	
C3809	VCEA0JAP470	E.CAPACITOR 6.3V 47U	1	
C3810	ECUX1H680JCV	C.CAPACITOR 50V 68P	1	
C3900-02	ECUX1E104ZFV	C.CAPACITOR 25V 0.1U	3	
CN3002,03	VJS3505A080	CONNECTOR (FEMALE)	2	
D3001-04	MA141K	DIODE	4	
D3005	MA335-R	DIODE	1	
D3101-03	MA141K	DIODE	3	
D3600-03	MA141K	DIODE	4	
D3701	MA8043	DIODE	1	

Ref.No.	Part No.	Part Name & Description	Pcs	Remarks
FL3401-03	ELB4C556	FILTER	3	
FL3701	ELB4D551	FILTER	1	
IC3001	AN91A12S	IC	1	
IC3002	AD790JR	IC	1	
IC3003,04	MN74HC221S	IC	2	
IC3005	MC74HC04AF	IC	1	
IC3006	MC74HC00AF	IC	1	
IC3007	MC74HC125AF	IC	1	
IC3008	NJM062M	IC	1	
IC3009	MC74HC04AF	IC	1	
IC3010,11	NJM062M	IC	2	
IC3012	MC14053BF	IC	1	
IC3013	NJM062M	IC	1	
IC3014	AD790JR	IC	1	
IC3015	UPD65650J203	IC	1	
IC3016,17	AD790JR	IC	2	
IC3018	MC74HC244AF	IC	1	
IC3019	MN74HC221S	IC	1	
IC3020	CG24692-4188	IC	1	
IC3022	MC74HC04AF	IC	1	
IC3023,24	MC74HC244AF	IC	2	
IC3025,26	MC74HC74AF	IC	2	
IC3027	MC74HC00AF	IC	1	
IC3028	SN74LS221NS	IC	1	
IC3029	MC74HC244AF	IC	1	
IC3030	XC62AP5002PL	IC	1	
IC3031,32	MC74HC00AF	IC	2	
IC3201,02	MC14577CF	IC	2	
IC3203	M51272FP	IC	1	
IC3401,02	NJM062M	IC	2	
IC3405	MC14053BF	IC	1	
IC3406	UPC2391GB	IC	1	
IC3407	XC62AP5002PL	IC	1	
IC3408,09	NJM062M	IC	2	
IC3410	MC14053BF	IC	1	
IC3600	VSI1506C	IC	1	
IC3601	HY256ALJ10E2	IC	1	
IC3602	NJM2904M	IC	1	
IC3603	MN12821R	IC	1	
IC3604,05	AK6440F	IC	2	
IC3606	MC14053BF	IC	1	
IC3607	M88344PFV	IC	1	
IC3608	NJM2904M	IC	1	
IC3610	NJM2904M	IC	1	
IC3611,12	HD151015SSEL	IC	2	
IC3613	MC74HC08AF	IC	1	
IC3615	MC74HC08AF	IC	1	
IC3616	XC62AP5002PL	IC	1	
IC3617	MC14053BF	IC	1	
IC3701-03	MN655431SHE2	IC	3	
IC3704	MN6734	IC	1	
IC3705	ADV7128KR30	IC	1	
IC3706	MN657011H	IC	1	
IC3707	MC74HC04AF	IC	1	
IC3708	AD589JR	IC	1	
IC3709	NJM592M8	IC	1	
IC3710	AN2040SB	IC	1	
IC3711-13	HD151015SSEL	IC	3	
IC3714	XC62AP5002PL	IC	1	
IC3715	XC62AP3502ML	IC	1	
IC3716,17	XC62AP5002PL	IC	2	
IC3901-03	MC74HC244AF	IC	3	
ICS3021	VJS3427X028	CONNECTOR (FEMALE)	1	
L3001	VLQ0163J221	COIL 220UH	1	
L3002	VLQ0319K101	COIL 100UH	1	
L3003	VLQ0163J390	COIL 39UH	1	

Ref.No.	Part No.	Part Name & Description	Pcs	Remarks
L3004-06	VLQ0319K101	COIL 100UH	3	
L3007	VLQ0163J221	COIL 220UH	1	
L3008-10	VLQ0319K101	COIL 100UH	3	
L3011-14	VLP0147	COIL	4	
L3100,01	VLQ0319K101	COIL 100UH	2	
L3201,02	VLQ0319K101	COIL 100UH	2	
L3203,04	VLQ0163J470	COIL 47UH	2	
L3205	VLQ0163J8R2	COIL 8.2UH	1	
L3206	VLQ0163J120	COIL 12UH	1	
L3211	VLQ0319K101	COIL 100UH	1	
L3401-03	VLQ0319K101	COIL 100UH	3	
L3410,11	VLQ0319K220	COIL 22UH	2	
L3412,13	VLQ0319K101	COIL 100UH	2	
L3414	VLQ0163J220	COIL 22UH	1	
L3415	VLQ0163J1R5	COIL 1.5UH	1	
L3416	VLQ0163J120	COIL 12UH	1	
L3417	VLQ0163J220	COIL 22UH	1	
L3418	VLQ0163J1R5	COIL 1.5UH	1	
L3419	VLQ0163J120	COIL 12UH	1	
L3420	VLQ0163J220	COIL 22UH	1	
L3421	VLQ0163J1R5	COIL 1.5UH	1	
L3422	VLQ0163J120	COIL 12UH	1	
L3600	VLQ0319K101	COIL 100UH	1	
L3605,06	VLQ0319K101	COIL 100UH	2	
L3607-09	VLQ0163J1R5	COIL 1.5UH	3	
L3701-04	VLQ0319K101	COIL 100UH	4	
L3705	VLQ0163J101	COIL 100UH	1	
L3706	VLQ0319K101	COIL 100UH	1	
L3708	VLQ0319K101	COIL 100UH	1	
L3710	VLQ0319K101	COIL 100UH	1	
L3711,12	VLP0147	COIL	2	
P3001,02	VJS2907D025	CONNECTOR (FEMALE)	2	
P3003	VJP3125B006	CONNECTOR (MALE)	1	
P3004	VJS3406D018	CONNECTOR (FEMALE)	1	
P3005	VJP3125B008	CONNECTOR (MALE)	1	
P3006	VJP3125D004	CONNECTOR (MALE)	1	
P3007	VJP3125D009	CONNECTOR (MALE)	1	
P3008	VJP3358A012	CONNECTOR (MALE)	1	
P3009	VJP3358A018	CONNECTOR (MALE)	1	
P3010	VJP3358A030	CONNECTOR (MALE)	1	
Q3001	2SD1819A	TRANSISTOR	1	
Q3002	2SB1218A	TRANSISTOR	1	
Q3003,04	2SK608-QR	TRANSISTOR	2	
Q3005	2SB1218A	TRANSISTOR	1	
Q3101	2SB1218A	TRANSISTOR	1	
Q3102	2SD1819A	TRANSISTOR	1	
Q3103	UN5213	TRANSISTOR	1	
Q3201,02	2SB1218A	TRANSISTOR	2	
Q3203	2SD1819A	TRANSISTOR	1	
Q3204	2SB1218A	TRANSISTOR	1	
Q3205	2SD1819A	TRANSISTOR	1	
Q3206	XN4401	TRANSISTOR	1	
Q3207	XN4501	TRANSISTOR	1	
Q3208	XN4401	TRANSISTOR	1	
Q3209	XN4501	TRANSISTOR	1	
Q3401	2SD1819A	TRANSISTOR	1	
Q3403	2SD1819A	TRANSISTOR	1	
Q3405	2SD1819A	TRANSISTOR	1	
Q3407-09	2SD1819A	TRANSISTOR	3	
Q3410	2SC3930-B	TRANSISTOR	1	
Q3411,12	2SA1532-B	TRANSISTOR	2	
Q3414	2SC3930-B	TRANSISTOR	1	
Q3416	2SD1819A	TRANSISTOR	1	
Q3417	2SC3930-B	TRANSISTOR	1	
Q3418,19	2SA1532-B	TRANSISTOR	2	
Q3421	2SC3930-B	TRANSISTOR	1	
Q3423	2SD1819A	TRANSISTOR	1	
Q3424	2SC3930-B	TRANSISTOR	1	
Q3425,26	2SA1532-B	TRANSISTOR	2	

Ref.No.	Part No.	Part Name & Description	Pcs	Remarks
Q3428	2SC3930-B	TRANSISTOR	1	
Q3430	2SD1819A	TRANSISTOR	1	
Q3431-33	2SC3930-B	TRANSISTOR	3	
Q3440-42	2SA1532-B	TRANSISTOR	3	
Q3600-02	2SC3930-B	TRANSISTOR	3	
Q3701-03	2SD1819A	TRANSISTOR	3	
Q3704,05	2SB1218A	TRANSISTOR	2	
Q3706	2SD1819A	TRANSISTOR	1	
Q3707,08	2SB1218A	TRANSISTOR	2	
Q3709-11	2SD1819A	TRANSISTOR	3	
Q3712,13	2SB1218A	TRANSISTOR	2	
Q3714-16	2SD1819A	TRANSISTOR	3	
Q3718,19	2SB1218A	TRANSISTOR	2	
QR3602	UN5213	TRANSISTOR	1	
QR3605,06	UN5213	TRANSISTOR	2	
QR3609	UN5213	TRANSISTOR	1	
		RESISTORS		
R3001	ERJ3GEYJ105	M.RESISTOR CH 3W 1M	1	
R3002	ERJ3GEYJ392	M.RESISTOR CH 3W 3.9K	1	
R3003	ERJ3GEYJ221	M.RESISTOR CH 3W 220	1	
R3004	ERJ3GEYJ222	M.RESISTOR CH 3W 2.2K	1	
R3005-07	ERJ3GEYJ223	M.RESISTOR CH 3W 22K	3	
R3008	ERJ3GEYJ224	M.RESISTOR CH 3W 220K	1	
R3009	ERJ3GEYJ684	M.RESISTOR CH 3W 680K	1	
R3010	ERJ3GEYJ123	M.RESISTOR CH 3W 12K	1	
R3011,12	ERJ3GEYJ822	M.RESISTOR CH 3W 8.2K	2	
R3013	ERJ3GEYJ222	M.RESISTOR CH 3W 2.2K	1	
R3014	ERJ3GEYJ224	M.RESISTOR CH 3W 220K	1	
R3015	ERJ3GEYJ272	M.RESISTOR CH 3W 2.7K	1	
R3016	ERJ3GEYJ561	M.RESISTOR CH 3W 560	1	
R3017	ERJ3GEYJ683	M.RESISTOR CH 3W 68K	1	
R3018	ERJ3GEYJ223	M.RESISTOR CH 3W 22K	1	
R3019,20	ERJ3GEYJ563	M.RESISTOR CH 3W 56K	2	
R3021	ERJ3GEYJ682	M.RESISTOR CH 3W 6.8K	1	
R3022	ERJ3GEYJ332	M.RESISTOR CH 3W 3.3K	1	
R3023,24	ERJ3GEYJ102	M.RESISTOR CH 3W 1K	2	
R3025	ERJ3GEYJ471	M.RESISTOR CH 3W 470	1	
R3028	ERJ3GEYJ183	M.RESISTOR CH 3W 18K	1	
R3029	ERJ3GEYJ153	M.RESISTOR CH 3W 15K	1	
R3030	ERJ3GEYJ333	M.RESISTOR CH 3W 33K	1	
R3031	ERJ3GEYJ105	M.RESISTOR CH 3W 1M	1	
R3032	ERJ3GEYJ223	M.RESISTOR CH 3W 22K	1	
R3033	ERJ3GEYJ102	M.RESISTOR CH 3W 1K	1	
R3034	ERJ3GEYJ122	M.RESISTOR CH 3W 1.2K	1	
R3035,36	ERJ3GEYJ123	M.RESISTOR CH 3W 12K	2	
R3037	ERJ3GEYJ273	M.RESISTOR CH 3W 27K	1	
R3038	ERJ3GEYJ473	M.RESISTOR CH 3W 47K	1	
R3039	ERJ3GEYJ105	M.RESISTOR CH 3W 1M	1	
R3040	ERJ3GEYJ104	M.RESISTOR CH 3W 100K	1	
R3041	ERJ3GEYJ222	M.RESISTOR CH 3W 2.2K	1	
R3042	ERJ3GEYJ223	M.RESISTOR CH 3W 22K	1	
R3043	VRE0034E122	M.RESISTOR CH 1/10W 1.2K	1	
R3044	ERJ3GEYJ181	M.RESISTOR CH 3W 180	1	
R3045	ERJ3GEYJ103	M.RESISTOR CH 3W 10K	1	
R3046	ERJ3GEYJ102	M.RESISTOR CH 3W 1K	1	
R3047	ERJ3GEYJ561	M.RESISTOR CH 3W 560	1	
R3048	ERJ3GEYJ822	M.RESISTOR CH 3W 8.2K	1	
R3049	ERJ3GEY0R00	M.RESISTOR CH 3W 0.00	1	
R3051	ERJ3GEYJ222	M.RESISTOR CH 3W 2.2K	1	
R3052	ERJ3GEYJ122	M.RESISTOR CH 3W 1.2K	1	
R3053	ERJ3GEYJ223	M.RESISTOR CH 3W 22K	1	
R3054	ERJ3GEYJ153	M.RESISTOR CH 3W 15K	1	
R3055	ERJ3GEYJ684	M.RESISTOR CH 3W 680K	1	
R3056	ERJ3GEYJ183	M.RESISTOR CH 3W 18K	1	
R3057	ERJ3GEYJ102	M.RESISTOR CH 3W 1K	1	
R3058	ERJ3GEYJ473	M.RESISTOR CH 3W 47K	1	
R3059	ERJ3GEYJ123	M.RESISTOR CH 3W 12K	1	
R3060	ERJ3GEYJ103	M.RESISTOR CH 3W 10K	1	
R3061,62	ERJ3GEYJ473	M.RESISTOR CH 3W 47K	2	

Ref.No.	Part No.	Part Name & Description	Pcs	Remarks
R3063	ERJ3GEYJ182	M.RESISTOR CH 3W 1.8K	1	
R3064	ERJ3GEYJ332	M.RESISTOR CH 3W 3.3K	1	
R3065	ERJ3GEYJ102	M.RESISTOR CH 3W 1K	1	
R3068	ERJ3GEYJ473	M.RESISTOR CH 3W 47K	1	
R3069	ERJ3GEYJ183	M.RESISTOR CH 3W 18K	1	
R3070	ERJ3GEYJ123	M.RESISTOR CH 3W 12K	1	
R3071	ERJ3GEYJ561	M.RESISTOR CH 3W 560	1	
R3072	ERJ3GEY0R00	M.RESISTOR CH 3W 0.00	1	
R3074	ERJ3GEYJ104	M.RESISTOR CH 3W 100K	1	
R3075	ERJ3GEY0R00	M.RESISTOR CH 3W 0.00	1	
R3077,78	ERJ3GEY0R00	M.RESISTOR CH 3W 0.00	2	
R3080	ERJ3GEY0R00	M.RESISTOR CH 3W 0.00	1	
R3082,83	ERJ3GEY0R00	M.RESISTOR CH 3W 0.00	2	
R3085	ERJ3GEYJ392	M.RESISTOR CH 3W 3.9K	1	
R3086	ERJ3GEYJ123	M.RESISTOR CH 3W 12K	1	
R3087	ERJ3GEYJ561	M.RESISTOR CH 3W 560	1	
R3088	ERJ3GEYJ821	M.RESISTOR CH 3W 820	1	
R3089	ERJ3GEY0R00	M.RESISTOR CH 3W 0.00	1	
R3092	ERJ3GEYJ102	M.RESISTOR CH 3W 1K	1	
R3093	ERJ3GEYJ221	M.RESISTOR CH 3W 220	1	
R3094	ERJ3GEYJ102	M.RESISTOR CH 3W 1K	1	
R3095	ERJ3GEYJ221	M.RESISTOR CH 3W 220	1	
R3096	ERJ3GEYJ392	M.RESISTOR CH 3W 3.9K	1	
R3099-02	ERJ3GEYJ104	M.RESISTOR CH 3W 100K	4	
R3109	ERJ3GEYJ101	M.RESISTOR CH 3W 100	1	
R3110	ERJ3GEY0R00	M.RESISTOR CH 3W 0.00	1	
R3111	ERJ3GEYJ102	M.RESISTOR CH 3W 1K	1	
R3112	ERJ3GEYJ222	M.RESISTOR CH 3W 2.2K	1	
R3114	VRE0034E823	M.RESISTOR CH 1/10W 82K	1	
R3115	VRE0034E333	M.RESISTOR CH 1/10W 33K	1	
R3117	ERJ3GEY0R00	M.RESISTOR CH 3W 0.00	1	
R3118	ERJ3GEYJ471	M.RESISTOR CH 3W 470	1	
R3122	ERJ3GEY0R00	M.RESISTOR CH 3W 0.00	1	
R3126	ERJ3GEY0R00	M.RESISTOR CH 3W 0.00	1	
R3127	ERJ3GEYJ472	M.RESISTOR CH 3W 4.7K	1	
R3128	ERJ3GEYJ223	M.RESISTOR CH 3W 22K	1	
R3129	VRE0034E102	M.RESISTOR CH 1/10W 1K	1	
R3130	VRE0034E680	M.RESISTOR CH 1/10W 68	1	
R3131	ERJ6GEYJ3R9	M.RESISTOR CH1/16W 3.9	1	
R3132,33	ERJ3GEYJ332	M.RESISTOR CH 3W 3.3K	2	
R3134,35	ERJ3GEYJ104	M.RESISTOR CH 3W 100K	2	
R3136	ERJ3GEY0R00	M.RESISTOR CH 3W 0.00	1	
R3139	ERJ3GEY0R00	M.RESISTOR CH 3W 0.00	1	
R3141	ERJ3GEY0R00	M.RESISTOR CH 3W 0.00	1	
R3145	ERJ3GEY0R00	M.RESISTOR CH 3W 0.00	1	
R3147	ERJ3GEY0R00	M.RESISTOR CH 3W 0.00	1	
R3149,50	ERJ3GEY0R00	M.RESISTOR CH 3W 0.00	2	
R3201	ERJ3GEYJ393	M.RESISTOR CH 3W 39K	1	
R3202	ERJ3GEYJ103	M.RESISTOR CH 3W 10K	1	
R3203	ERJ3GEYJ561	M.RESISTOR CH 3W 560	1	
R3204	ERJ3GEYJ821	M.RESISTOR CH 3W 820	1	
R3205	ERJ3GEYJ273	M.RESISTOR CH 3W 27K	1	
R3206	ERJ3GEYJ103	M.RESISTOR CH 3W 10K	1	
R3207,08	ERJ3GEYJ561	M.RESISTOR CH 3W 560	2	
R3209	ERJ3GEYJ273	M.RESISTOR CH 3W 27K	1	
R3210	ERJ3GEYJ103	M.RESISTOR CH 3W 10K	1	
R3211,12	ERJ3GEYJ561	M.RESISTOR CH 3W 560	2	
R3214,15	ERJ3GEYJ561	M.RESISTOR CH 3W 560	2	
R3216	ERJ3GEYJ821	M.RESISTOR CH 3W 820	1	
R3217	ERJ3GEYJ102	M.RESISTOR CH 3W 1K	1	
R3218	ERJ3GEYJ332	M.RESISTOR CH 3W 3.3K	1	
R3219	ERJ3GEYJ101	M.RESISTOR CH 3W 100	1	
R3220	ERJ3GEYJ331	M.RESISTOR CH 3W 330	1	
R3222	ERJ3GEY0R00	M.RESISTOR CH 3W 0.00	1	
R3224	ERJ3GEYJ183	M.RESISTOR CH 3W 18K	1	
R3225	ERJ3GEYJ273	M.RESISTOR CH 3W 27K	1	
R3226	ERJ3GEYJ821	M.RESISTOR CH 3W 820	1	
R3227	ERJ3GEYJ102	M.RESISTOR CH 3W 1K	1	
R3228	ERJ3GEYJ332	M.RESISTOR CH 3W 3.3K	1	
R3229	ERJ3GEY0R00	M.RESISTOR CH 3W 0.00	1	
R3230	ERJ3GEYJ183	M.RESISTOR CH 3W 18K	1	
R3231,32	ERJ3GEYJ273	M.RESISTOR CH 3W 27K	2	
R3233	ERJ3GEYJ223	M.RESISTOR CH 3W 22K	1	
R3234,35	ERJ3GEYJ102	M.RESISTOR CH 3W 1K	2	
R3236-38	ERJ3GEYJ471	M.RESISTOR CH 3W 470	3	

Ref.No.	Part No.	Part Name & Description	Pcs	Remarks
R3239	ERJ3GEY0R00	M.RESISTOR CH 3W 0.00	1	
R3243	ERJ3GEYJ471	M.RESISTOR CH 3W 470	1	
R3244	ERJ3GEY0R00	M.RESISTOR CH 3W 0.00	1	
R3245	ERJ3GEYJ471	M.RESISTOR CH 3W 470	1	
R3246	ERJ3GEYJ273	M.RESISTOR CH 3W 27K	1	
R3247	ERJ3GEYJ183	M.RESISTOR CH 3W 18K	1	
R3248	ERJ3GEYJ681	M.RESISTOR CH 3W 680	1	
R3249	ERJ3GEYJ182	M.RESISTOR CH 3W 1.8K	1	
R3250	ERJ3GEY0R00	M.RESISTOR CH 3W 0.00	1	
R3251,52	ERJ3GEYJ220	M.RESISTOR CH 3W 22	2	
R3253	ERJ3GEYJ100	M.RESISTOR CH 3W 10	1	
R3254	ERJ3GEY0R00	M.RESISTOR CH 3W 0.00	1	
R3255	ERJ3GEYJ182	M.RESISTOR CH 3W 1.8K	1	
R3256	ERJ3GEYJ100	M.RESISTOR CH 3W 10	1	
R3258	ERJ3GEYJ680	M.RESISTOR CH 3W 68	1	
R3259	ERJ3GEYJ182	M.RESISTOR CH 3W 1.8K	1	
R3260	ERJ3GEY0R00	M.RESISTOR CH 3W 0.00	1	
R3261,62	ERJ3GEYJ220	M.RESISTOR CH 3W 22	2	
R3263	ERJ3GEYJ100	M.RESISTOR CH 3W 10	1	
R3264	ERJ3GEY0R00	M.RESISTOR CH 3W 0.00	1	
R3265	ERJ3GEYJ182	M.RESISTOR CH 3W 1.8K	1	
R3266	ERJ3GEYJ100	M.RESISTOR CH 3W 10	1	
R3267,68	ERJ3GEY0R00	M.RESISTOR CH 3W 0.00	2	
R3269	ERJ3GEYJ473	M.RESISTOR CH 3W 47K	1	
R3270	VRE0034E221	M.RESISTOR CH 1/10W 220	1	
R3271	VRE0034E272	M.RESISTOR CH 1/10W 2.7K	1	
R3401	ERJ3GEYJ104	M.RESISTOR CH 3W 100K	1	
R3402,03	ERJ3GEYJ103	M.RESISTOR CH 3W 10K	2	
R3404	ERJ3GEYJ473	M.RESISTOR CH 3W 47K	1	
R3405	ERJ3GEYJ474	M.RESISTOR CH 3W 470K	1	
R3406,07	ERJ3GEYJ103	M.RESISTOR CH 3W 10K	2	
R3408-10	ERJ3GEYJ473	M.RESISTOR CH 3W 47K	3	
R3414-16	ERJ3GEYJ473	M.RESISTOR CH 3W 47K	3	
R3424	ERJ3GEYJ472	M.RESISTOR CH 3W 4.7K	1	
R3425	ERJ3GEYJ272	M.RESISTOR CH 3W 2.7K	1	
R3426	ERJ3GEYJ152	M.RESISTOR CH 3W 1.5K	1	
R3433	ERJ3GEYJ102	M.RESISTOR CH 3W 1K	1	
R3434	ERJ3GEYJ331	M.RESISTOR CH 3W 330	1	
R3435	ERJ3GEYJ101	M.RESISTOR CH 3W 100	1	
R3436	ERJ3GEY0R00	M.RESISTOR CH 3W 0.00	1	
R3437	ERJ3GEYJ122	M.RESISTOR CH 3W 1.2K	1	
R3439	ERJ3GEYJ102	M.RESISTOR CH 3W 1K	1	
R3440	ERJ3GEYJ331	M.RESISTOR CH 3W 330	1	
R3441	ERJ3GEYJ101	M.RESISTOR CH 3W 100	1	
R3442	ERJ3GEY0R00	M.RESISTOR CH 3W 0.00	1	
R3443	ERJ3GEYJ122	M.RESISTOR CH 3W 1.2K	1	
R3445	ERJ3GEYJ102	M.RESISTOR CH 3W 1K	1	
R3446	ERJ3GEYJ331	M.RESISTOR CH 3W 330	1	
R3447	ERJ3GEYJ101	M.RESISTOR CH 3W 100	1	
R3448	ERJ3GEY0R00	M.RESISTOR CH 3W 0.00	1	
R3449	ERJ3GEYJ122	M.RESISTOR CH 3W 1.2K	1	
R3451	ERJ3GEYJ273	M.RESISTOR CH 3W 27K	1	
R3452	ERJ3GEYJ103	M.RESISTOR CH 3W 10K	1	
R3453	ERJ3GEYJ683	M.RESISTOR CH 3W 68K	1	
R3454	ERJ3GEYJ103	M.RESISTOR CH 3W 10K	1	
R3455	ERJ3GEYJ683	M.RESISTOR CH 3W 68K	1	
R3456,57	ERJ3GEYJ392	M.RESISTOR CH 3W 3.9K	2	
R3458	ERJ3GEYJ681	M.RESISTOR CH 3W 680	1	
R3459,60	ERJ3GEYJ103	M.RESISTOR CH 3W 10K	2	
R3461-64	ERJ3GEYJ102	M.RESISTOR CH 3W 1K	4	
R3465,66	VRE0034E473	M.RESISTOR CH 1/10W 47K	2	
R3467,68	VRE0034E103	M.RESISTOR CH 1/10W 10K	2	
R3469	VRE0034E473	M.RESISTOR CH 1/10W 47K	1	
R3470	VRE0034E103	M.RESISTOR CH 1/10W 10K	1	
R3471,72	ERJ3GEYJ102	M.RESISTOR CH 3W 1K	2	
R3473-75	ERJ3GEYJ153	M.RESISTOR CH 3W 15K	3	
R3476-79	ERJ3GEYJ103	M.RESISTOR CH 3W 10K	4	
R3480	ERJ3GEYJ392	M.RESISTOR CH 3W 3.9K	1	
R3481	ERJ3GEYJ273	M.RESISTOR CH 3W 27K	1	
R3483	ERJ3GEYJ103	M.RESISTOR CH 3W 10K	1	
R3484	ERJ3GEYJ683	M.RESISTOR CH 3W 68K	1	
R3485	ERJ3GEYJ103	M.RESISTOR CH 3W 10K	1	
R3486	ERJ3GEYJ683	M.RESISTOR CH 3W 68K	1	
R3487	ERJ3GEYJ681	M.RESISTOR CH 3W 680	1	
R3488	ERJ3GEYJ223	M.RESISTOR CH 3W 22K	1	

Ref.No.	Part No.	Part Name & Description	Pcs	Remarks
R3489	ERJ3GEYJ103	M.RESISTOR CH 3W 10K	1	
R3490	ERJ3GEYJ681	M.RESISTOR CH 3W 680	1	
R3491	ERJ3GEYJ103	M.RESISTOR CH 3W 10K	1	
R3492	ERJ3GEYJ683	M.RESISTOR CH 3W 68K	1	
R3493,94	ERJ3GEYJ103	M.RESISTOR CH 3W 10K	2	
R3504	ERJ3GEYJ332	M.RESISTOR CH 3W 3.3K	1	
R3505	ERJ3GEYJ222	M.RESISTOR CH 3W 2.2K	1	
R3506	ERJ3GEYJ392	M.RESISTOR CH 3W 3.9K	1	
R3507	ERJ3GEYJ332	M.RESISTOR CH 3W 3.3K	1	
R3508	ERJ3GEYJ222	M.RESISTOR CH 3W 2.2K	1	
R3509	ERJ3GEYJ392	M.RESISTOR CH 3W 3.9K	1	
R3510	ERJ3GEYJ332	M.RESISTOR CH 3W 3.3K	1	
R3511	ERJ3GEYJ222	M.RESISTOR CH 3W 2.2K	1	
R3512	ERJ3GEYJ392	M.RESISTOR CH 3W 3.9K	1	
R3513	ERJ3GEYJ473	M.RESISTOR CH 3W 47K	1	
R3514	ERJ3GEYJ333	M.RESISTOR CH 3W 33K	1	
R3516	ERJ3GEYJ561	M.RESISTOR CH 3W 560	1	
R3518	ERJ3GEYJ561	M.RESISTOR CH 3W 560	1	
R3519	ERJ3GEYJ102	M.RESISTOR CH 3W 1K	1	
R3520	ERJ3GEYJ101	M.RESISTOR CH 3W 100	1	
R3521	ERJ3GEYJ222	M.RESISTOR CH 3W 2.2K	1	
R3524	ERJ3GEYJ101	M.RESISTOR CH 3W 100	1	
R3525	ERJ3GEYJ122	M.RESISTOR CH 3W 1.2K	1	
R3526-28	ERJ3GEY0R00	M.RESISTOR CH 3W 0.00	3	
R3532	ERJ3GEYJ101	M.RESISTOR CH 3W 100	1	
R3533	ERJ3GEYJ122	M.RESISTOR CH 3W 1.2K	1	
R3534,35	ERJ3GEYJ473	M.RESISTOR CH 3W 47K	2	
R3537	ERJ3GEYJ561	M.RESISTOR CH 3W 560	1	
R3539	ERJ3GEYJ331	M.RESISTOR CH 3W 330	1	
R3540	ERJ3GEYJ102	M.RESISTOR CH 3W 1K	1	
R3541	ERJ3GEYJ101	M.RESISTOR CH 3W 100	1	
R3542	ERJ3GEYJ222	M.RESISTOR CH 3W 2.2K	1	
R3545	ERJ3GEYJ101	M.RESISTOR CH 3W 100	1	
R3546	ERJ3GEYJ122	M.RESISTOR CH 3W 1.2K	1	
R3550-52	ERJ3GEYJ562	M.RESISTOR CH 3W 5.6K	3	
R3553	ERJ3GEYJ101	M.RESISTOR CH 3W 100	1	
R3554	ERJ3GEYJ122	M.RESISTOR CH 3W 1.2K	1	
R3555	ERJ3GEYJ473	M.RESISTOR CH 3W 47K	1	
R3556	ERJ3GEYJ393	M.RESISTOR CH 3W 39K	1	
R3558	ERJ3GEYJ561	M.RESISTOR CH 3W 560	1	
R3560	ERJ3GEYJ561	M.RESISTOR CH 3W 560	1	
R3561	ERJ3GEYJ102	M.RESISTOR CH 3W 1K	1	
R3562	ERJ3GEYJ101	M.RESISTOR CH 3W 100	1	
R3563	ERJ3GEYJ122	M.RESISTOR CH 3W 1.2K	1	
R3566	ERJ3GEYJ101	M.RESISTOR CH 3W 100	1	
R3567	ERJ3GEYJ122	M.RESISTOR CH 3W 1.2K	1	
R3570	ERJ3GEYJ823	M.RESISTOR CH 3W 82K	1	
R3571	ERJ3GEYJ684	M.RESISTOR CH 3W 680K	1	
R3572	ERJ3GEYJ824	M.RESISTOR CH 3W 820K	1	
R3573	ERJ3GEYJ823	M.RESISTOR CH 3W 82K	1	
R3574	ERJ3GEYJ101	M.RESISTOR CH 3W 100	1	
R3575	ERJ3GEYJ122	M.RESISTOR CH 3W 1.2K	1	
R3576	ERJ3GEYJ684	M.RESISTOR CH 3W 680K	1	
R3577	ERJ3GEYJ824	M.RESISTOR CH 3W 820K	1	
R3578	ERJ3GEYJ823	M.RESISTOR CH 3W 82K	1	
R3579	ERJ3GEYJ684	M.RESISTOR CH 3W 680K	1	
R3580	ERJ3GEYJ824	M.RESISTOR CH 3W 820K	1	
R3581	ERJ3GEY0R00	M.RESISTOR CH 3W 0.00	1	
R3587-89	ERJ3GEYJ473	M.RESISTOR CH 3W 47K	3	
R3590	ERJ3GEYJ684	M.RESISTOR CH 3W 680K	1	
R3597	ERJ3GEY0R00	M.RESISTOR CH 3W 0.00	1	
R3598,99	ERJ3GEYJ684	M.RESISTOR CH 3W 680K	2	
R3600	ERJ3GEYJ680	M.RESISTOR CH 3W 68	1	
R3601	ERJ3GEYJ103	M.RESISTOR CH 3W 10K	1	
R3602-04	ERJ3GEYJ472	M.RESISTOR CH 3W 4.7K	3	
R3607	ERJ3GEYJ472	M.RESISTOR CH 3W 4.7K	1	
R3615	ERJ3GEYJ123	M.RESISTOR CH 3W 12K	1	
R3616	ERJ3GEYJ183	M.RESISTOR CH 3W 18K	1	
R3617	ERJ3GEYJ102	M.RESISTOR CH 3W 1K	1	
R3618	ERJ3GEYJ472	M.RESISTOR CH 3W 4.7K	1	
R3619,20	ERJ3GEYJ563	M.RESISTOR CH 3W 56K	2	
R3623	ERJ3GEYJ123	M.RESISTOR CH 3W 12K	1	
R3624	ERJ3GEYJ183	M.RESISTOR CH 3W 18K	1	
R3625,26	ERJ3GEYJ104	M.RESISTOR CH 3W 100K	2	
R3629,30	ERJ3GEYJ682	M.RESISTOR CH 3W 6.8K	2	

Ref.No.	Part No.	Part Name & Description	Pcs	Remarks
R3631	ERJ3GEYJ223	M.RESISTOR CH 3W 22K	1	
R3632	ERJ3GEYJ682	M.RESISTOR CH 3W 6.8K	1	
R3633	ERJ3GEYJ472	M.RESISTOR CH 3W 4.7K	1	
R3634,35	ERJ3GEYJ223	M.RESISTOR CH 3W 22K	2	
R3636-38	ERJ3GEYJ183	M.RESISTOR CH 3W 18K	3	
R3639	ERJ3GEYJ562	M.RESISTOR CH 3W 5.6K	1	
R3640	ERJ3GEYJ473	M.RESISTOR CH 3W 47K	1	
R3642,43	ERJ3GEYJ102	M.RESISTOR CH 3W 1K	2	
R3644-46	ERJ3GEYJ472	M.RESISTOR CH 3W 4.7K	3	
R3648	ERJ3GEYJ102	M.RESISTOR CH 3W 1K	1	
R3653	ERJ3GEYJ273	M.RESISTOR CH 3W 27K	1	
R3654	ERJ3GEYJ183	M.RESISTOR CH 3W 18K	1	
R3701-03	ERJ3GEYJ151	M.RESISTOR CH 3W 150	3	
R3704-46	ERJ3GEYJ102	M.RESISTOR CH 3W 1K	43	
R3747	VRE0034E181	M.RESISTOR CH 1/10W 180	1	
R3748	VRE0034E561	M.RESISTOR CH 1/10W 560	1	
R3749	VRE0034E121	M.RESISTOR CH 1/10W 120	1	
R3752	VRE0034E821	M.RESISTOR CH 1/10W 820	1	
R3753	VRE0034E562	M.RESISTOR CH 1/10W 5.6K	1	
R3754	VRE0034E822	M.RESISTOR CH 1/10W 8.2K	1	
R3755	VRE0034E103	M.RESISTOR CH 1/10W 10K	1	
R3756	VRE0034E221	M.RESISTOR CH 1/10W 220	1	
R3757-62	ERJ3GEY0R00	M.RESISTOR CH 3W 0.00	6	
R3764	ERJ3GEY0R00	M.RESISTOR CH 3W 0.00	1	
R3765	ERJ3GEYJ220	M.RESISTOR CH 3W 22	1	
R3766	ERJ3GEYJ181	M.RESISTOR CH 3W 180	1	
R3767	ERJ3GEYJ332	M.RESISTOR CH 3W 3.3K	1	
R3768	ERJ3GEYJ470	M.RESISTOR CH 3W 47	1	
R3769	ERJ3GEYJ821	M.RESISTOR CH 3W 820	1	
R3770	ERJ3GEYJ102	M.RESISTOR CH 3W 1K	1	
R3771	ERJ3GEYJ332	M.RESISTOR CH 3W 3.3K	1	
R3772	ERJ3GEYJ331	M.RESISTOR CH 3W 330	1	
R3773	ERJ3GEYJ103	M.RESISTOR CH 3W 10K	1	
R3774	ERJ3GEYJ332	M.RESISTOR CH 3W 3.3K	1	
R3775	ERJ3GEYJ220	M.RESISTOR CH 3W 22	1	
R3776,77	ERJ3GEYJ472	M.RESISTOR CH 3W 4.7K	2	
R3778	ERJ3GEYJ223	M.RESISTOR CH 3W 22K	1	
R3779	ERJ3GEYJ333	M.RESISTOR CH 3W 33K	1	
R3780	ERJ3GEYJ103	M.RESISTOR CH 3W 10K	1	
R3781	ERJ3GEYJ473	M.RESISTOR CH 3W 47K	1	
R3782	ERJ3GEYJ103	M.RESISTOR CH 3W 10K	1	
R3783	ERJ3GEYJ333	M.RESISTOR CH 3W 33K	1	
R3784	ERJ3GEYJ103	M.RESISTOR CH 3W 10K	1	
R3785	ERJ3GEYJ682	M.RESISTOR CH 3W 6.8K	1	
R3786,87	ERJ3GEYJ102	M.RESISTOR CH 3W 1K	2	
R3788	ERJ3GEYJ680	M.RESISTOR CH 3W 68	1	
R3789	ERJ3GEYJ103	M.RESISTOR CH 3W 10K	1	
R3790	VRE0034E183	M.RESISTOR CH 1/10W 18K	1	
R3791	VRE0034E682	M.RESISTOR CH 1/10W 6.8K	1	
R3792	VRE0034E683	M.RESISTOR CH 1/10W 68K	1	
R3793	VRE0034E102	M.RESISTOR CH 1/10W 1K	1	
R3794	VRE0034E821	M.RESISTOR CH 1/10W 820	1	
R3795	VRE0034E221	M.RESISTOR CH 1/10W 220	1	
R3796	ERJ3GEYJ182	M.RESISTOR CH 3W 1.8K	1	
R3797	VRE0034E681	M.RESISTOR CH 1/10W 680	1	
R3798	ERJ3GEYJ220	M.RESISTOR CH 3W 22	1	
R3799	ERJ3GEYJ472	M.RESISTOR CH 3W 4.7K	1	
R3800	VRE0034E391	M.RESISTOR CH 1/10W 390	1	
R3801	ERJ3GEYJ472	M.RESISTOR CH 3W 4.7K	1	
R3803	ERJ3GEYJ471	M.RESISTOR CH 3W 470	1	
R3805	ERJ3GEYJ471	M.RESISTOR CH 3W 470	1	
R3806	ERJ3GEYJ272	M.RESISTOR CH 3W 2.7K	1	
R3807	ERJ3GEYJ471	M.RESISTOR CH 3W 470	1	
R3809	ERJ3GEYJ471	M.RESISTOR CH 3W 470	1	
R3810	ERJ3GEYJ272	M.RESISTOR CH 3W 2.7K	1	
R3811	VRE0034E470	M.RESISTOR CH 1/10W 47	1	
R3818	ERJ3GEYJ472	M.RESISTOR CH 3W 4.7K	1	
R3819	ERJ3GEYJ181	M.RESISTOR CH 3W 180	1	
R3820	ERJ3GEYJ473	M.RESISTOR CH 3W 47K	1	
R3821	ERJ3GEYJ220	M.RESISTOR CH 3W 22	1	
R3822	ERJ3GEYJ272	M.RESISTOR CH 3W 2.7K	1	
R3823	VRE0034E682	M.RESISTOR CH 1/10W 6.8K	1	
R3824	VRE0034E222	M.RESISTOR CH 1/10W 2.2K	1	
R3825	VRE0034E561	M.RESISTOR CH 1/10W 560	1	
R3826-29	ERJ3GEY0R00	M.RESISTOR CH 3W 0.00	4	

Ref.No.	Part No.	Part Name & Description	Pcs	Remarks
R3830	ERJ6GEYJ470	M.RESISTOR CH1/16W 47	1	
R3832	ERJ3GEY0R00	M.RESISTOR CH 3W 0.00	1	
R3833-35	ERJ3GEYJ471	M.RESISTOR CH 3W 470	3	
R3901	ERJ3GEYJ222	M.RESISTOR CH 3W 2.2K	1	
R3902	ERJ3GEYJ822	M.RESISTOR CH 3W 8.2K	1	
R3903	ERJ3GEY0R00	M.RESISTOR CH 3W 0.00	1	
VC3001	VCV0050	TRIMMER	1	
VC3201	VCV0047	TRIMMER	1	
VR3001	EVM7JGA00B54	V.RESISTOR 50K	1	
VR3002	EVM7JGA00B14	V.RESISTOR 10K	1	
VR3004	EVM7JGA00B14	V.RESISTOR 10K	1	
VR3005	EVM7JGA00B23	V.RESISTOR 2K	1	
VR3201-05	EVM7JGA00B53	V.RESISTOR 5K	6	
VR3207	EVM7JGA00B23	V.RESISTOR 2K	1	
VR3402-04	EVM7JGA00B15	V.RESISTOR 100K	3	
VR3408-10	EVM7JGA00B15	V.RESISTOR 100K	3	
VR3426-28	EVM7JGA00B53	V.RESISTOR 5K	3	
VR3701	EVM7JGA00BE2	V.RESISTOR 220	1	
VR3702,03	EVM7JGA00B13	V.RESISTOR 1K	2	
X3001	VSX0567A	CRYSTAL OSCILLATOR	1	
X3002	VSX0270	CRYSTAL OSCILLATOR	1	
X3003	VSX0114	CRYSTAL OSCILLATOR	1	
X3601	EF0V8004B0A	CRYSTAL OSCILLATOR	1	
**********	VEP20490B	P.C.BOARD W/COMPONENT		
		CAMERA PULSE		
		CAPACITORS		
C1	ECUX1E104ZFV	C.CAPACITOR CH 25V 0.001U	1	
C2	ECUX1H120JCV	C.CAPACITOR CH 50V 12P	1	
C3,C4	ECEV0JV101	E.CAPACITOR 6.3V 100U	2	
C5	ECUX1E104ZFV	C.CAPACITOR CH 25V 0.001U	1	
C6,C7	ECEV0JV101	E.CAPACITOR 6.3V 100U	2	
C8	ECUX1E104ZFV	C.CAPACITOR CH 25V 0.001U	1	
C9	ECUX1H390JCV	C.CAPACITOR CH 50V 39P	1	
C10	ECUX1H560JCV	C.CAPACITOR CH 50V 56P	1	
C11,12	ECUX1H680JCV	C.CAPACITOR CH 50V 68P	2	
C13,14	ECUX1H560JCV	C.CAPACITOR CH 50V 56P	2	
C15	ECUX1H103KBV	C.CAPACITOR CH 50V 0.01P	1	
C16	ECEV0JV220	E.CAPACITOR 6.3V 22U	1	
C17,18	ECUX1E104ZFV	C.CAPACITOR CH 25V 0.001U	2	
C19	ECEV0JV470	E.CAPACITOR 6.3V 47U	1	
C20	ECA0JFQ101	E.CAPACITOR 6.3V 100U	1	
C21	ECUX1H330JCV	C.CAPACITOR CH 50V 33P	1	
C23,24	ECUX1H330JCV	C.CAPACITOR CH 50V 33P	2	
C25,26	ECEV0JV101	E.CAPACITOR 6.3V 100U	2	
C27	ECEV0JV220	E.CAPACITOR 6.3V 22U	1	
C28-35	ECUX1E104ZFV	C.CAPACITOR CH 25V 0.001U	8	
C37	ECEV1CV470	E.CAPACITOR 16V 47U	1	
C39	ECEV1CV470	E.CAPACITOR 16V 47U	1	
C45,46	ECUX1E104ZFV	C.CAPACITOR CH 25V 0.001U	2	
C47-51	ECA0JFQ101	E.CAPACITOR 6.3V 100U	5	
D1-D6	MA151K	DIODE	6	<R>

Ref.No.	Part No.	Part Name & Description	Pcs	Remarks
D7,D8	MA329E	DIODE	2	<R>
IC1	MN5154-2	IC	1	<R>
IC2	MN5198	IC	1	<R>
IC3	MC74HC00AF	IC	1	<R>
IC4	MC74HC04AF	IC	1	<R>
IC5	74AC04SJ	IC	1	<R>
IC6	74AC08SJ	IC	1	<R>
IC7,C8	74AC00SJ	IC	2	<R>
IC9	74AC74SJ	IC	1	<R>
IC10	74AC04SJ	IC	1	<R>
IC11	TL062CPS	IC	1	<R>
L1-L8	VLP0147	COIL	8	
P1	VJS3422B018	CONNECTOR (FEMALE)	1	
P2	VJP3550B030	CONNECTOR (MALE)	1	
Q1	2SK662-Q	TRANSISTOR	1	<R>
Q2	2SB956-R	TRANSISTOR	1	<R>
Q3	2SD601A-R	TRANSISTOR	1	<R>
		RESISTORS		
R2,R3	ERJ3GEY0R00	M.RESISTOR CH 1/16W 0	2	
R5,R6	ERJ3GEY0R00	M.RESISTOR CH 1/16W 0	2	
R7	ERJ3GEYJ471	M.RESISTOR CH 3W 470	1	
R8	ERJ3GEY0R00	M.RESISTOR CH 1/16W 0	1	
R10-19	ERJ3GEY0R00	M.RESISTOR CH 1/16W 0	10	
R22	ERJ3GEYJ562	M.RESISTOR CH 3W 5.6K	1	
R23	ERJ3GEYJ102	M.RESISTOR CH 3W 1K	1	
R24	ERJ3GEYJ222	M.RESISTOR CH 3W 2.2K	1	
R25,26	ERJ3GEYJ153	M.RESISTOR CH 3W 15K	2	
R28	ERJ3GEY0R00	M.RESISTOR CH 1/16W 0	1	
R29	ERJ3GEYJ221	M.RESISTOR CH 3W 220	1	
R30	ERJ3GEYJ105	M.RESISTOR CH 3W 1M	1	
R31	ERJ3GEYJ102	M.RESISTOR CH 3W 1K	1	
R32	ERJ3GEYJ103	M.RESISTOR CH 3W 10K	1	
R34	ERJ3GEYJ103	M.RESISTOR CH 3W 10K	1	
R35	ERJ3GEYJ122	M.RESISTOR CH 3W 1.2K	1	
R36	ERJ3GEYJ102	M.RESISTOR CH 3W 1K	1	
R37	ERJ3GEYJ393	M.RESISTOR CH 3W 39K	1	
R38	ERJ3GEYJ183	M.RESISTOR CH 3W 18K	1	
R39	ERJ3GEYJ563	M.RESISTOR CH 3W 56K	1	
R40	ERJ3GEYJ223	M.RESISTOR CH 3W 22K	1	
R41	ERJ3GEY0R00	M.RESISTOR CH 1/16W 0	1	
R48	ERJ3GEY0R00	M.RESISTOR CH 1/16W 0	1	
R49-51	ERJ3GEYJ122	M.RESISTOR CH 3W 1.2K	3	
R52-54	ERJ3GEYJ123	M.RESISTOR CH 3W 12K	3	
R61,62	ERJ6GEY0R00	M.RESISTOR CH 1/10W 0	2	
R65	ERJ6GEY0R00	M.RESISTOR CH 1/10W 0	1	
R69,70	ERJ6GEY0R00	M.RESISTOR CH 1/10W 0	2	
SW1	VSS0342	SWITCH	1	<R>
VL1	EIC5EB007A	COIL	1	
VR1	VRV0161B501	V.RESISTOR 500	1	
VR2-R6	VRV0161B102	V.RESISTOR 1K	5	
VR7-R9	EVM7DGA00B54	V.RESISTOR	3	

Ref.No.	Part No.	Part Name & Description	Pcs	Remarks
**********	VEP20491A	P.C.BOARD W/COMPONENT		
		CAMERA DRIVE		
		CAPACITORS		
C501	ECEV1CV470	E.CAPACITOR 16V 47U	1	
C503	ECEV0JV330	E.CAPACITOR 6.3V 33U	1	
C504	ECEV0JV470	E.CAPACITOR 6.3V 47U	1	
C505	ECEV1CV220	E.CAPACITOR 16V 22U	1	
C506	ECA1AFQ182	E.CAPACITOR 10V 1800U	1	
C508	ECEV0JV330	E.CAPACITOR 6.3V 33U	1	
C509	ECA1AFQ182	E.CAPACITOR 10V 1800U	1	
C510	ECEV1CV220	E.CAPACITOR 16V 22U	1	
C511	ECEV1CV470	E.CAPACITOR 16V 47U	1	
C513	ECEV1CV470	E.CAPACITOR 16V 47U	1	
C514	ECEV0GV101Q	E.CAPACITOR 4V 100U	1	
C515	ECEV0JV101	E.CAPACITOR 6.3V 100U	1	
C517,18	ECUX1H100DCV	C.CAPACITOR CH 50V 10P	2	
C520	ECEV0JV220	E.CAPACITOR 6.3V 22U	1	
C521	ECUX1H682KBV	C.CAPACITOR CH 50V 6800P	1	
C522	ECEV0JV220	E.CAPACITOR 6.3V 22U	1	
C523	ECUX1H682KBV	C.CAPACITOR CH 50V 6800P	1	
C524	ECEV0JV220	E.CAPACITOR 6.3V 22U	1	
C525	ECEV1EV220	E.CAPACITOR 25V 22U	1	
C526	ECEV1HV2R2	E.CAPACITOR 50V 2.2U	1	
C527-30	ECUX1H470JCV	C.CAPACITOR CH 50V 47P	4	
C531	ECEV1HV100Q	E.CAPACITOR 50V 10U	1	
C535-37	ECEV1CV470	E.CAPACITOR 16V 47U	3	
C538	ECEV0JV220	E.CAPACITOR 6.3V 22U	1	
C539	ECEV0JV101	E.CAPACITOR 6.3V 100U	1	
C540	ECEV0JV220	E.CAPACITOR 6.3V 22U	1	
C541	ECEV0JV101	E.CAPACITOR 6.3V 100U	1	
C543	ECEV1CV470	E.CAPACITOR 16V 47U	1	
C544	ECEV0JV220	E.CAPACITOR 6.3V 22U	1	
C545	ECEV1EV330	E.CAPACITOR 25V 33U	1	
C546-49	ECUX1E104ZFV	C.CAPACITOR CH 25V 0.001U	4	
C550,51	ECUX1H100DCV	C.CAPACITOR CH 50V 10P	2	
C552-54	ECUX1H470JCV	C.CAPACITOR CH 50V 47P	3	
C555-57	ECEV1HN3R3S	E.CAPACITOR 50V 3.3U	3	
C559	ECUX1H682KBV	C.CAPACITOR CH 50V 6800P	1	
C560-63	ECA0JFQ101	E.CAPACITOR 6.3V 100U	4	
D501-04	MA152K	DIODE	4	<R>
D505	MA153	DIODE	1	<R>
D506-08	MA151K	DIODE	3	<R>
IC501,02	UPD16502GS	IC	2	<R>
IC503-06	74AC04SJ	IC	4	<R>
IC507,08	TL062CPS	IC	2	<R>
L501-04	VLP0147	COIL	4	
P501	VJS3550A030	CONNECTOR (FEMALE)	1	
P502	VJS3422B017	CONNECTOR (FEMALE)	1	
P503	VJS3422B016	CONNECTOR (FEMALE)	1	
Q501	2SB709A-R	TRANSISTOR	1	<R>
Q502	2SD1280-R	TRANSISTOR	1	<R>
Q503	2SD601A-R	TRANSISTOR	1	<R>

Ref.No.	Part No.	Part Name & Description	Pcs	Remarks
Q504	2SB709A-R	TRANSISTOR	1	<R>
Q506,07	2SC3734B24	TRANSISTOR	2	<R>
Q508	2SA1462Y34	TRANSISTOR	1	<R>
Q509	2SC3735B35	TRANSISTOR	1	<R>
Q510	2SB709A-R	TRANSISTOR	1	<R>
Q511	2SC3735B35	TRANSISTOR	1	<R>
Q512	2SB709A-R	TRANSISTOR	1	<R>
Q513	2SC3735B35	TRANSISTOR	1	<R>
Q514	2SB709A-R	TRANSISTOR	1	<R>
Q515-17	2SD601A-R	TRANSISTOR	3	<R>
Q518	2SD1280-R	TRANSISTOR	1	<R>
Q519	2SB709A-R	TRANSISTOR	1	<R>
Q520	2SB956-R	TRANSISTOR	1	<R>
Q521	2SD601A-R	TRANSISTOR	1	<R>
Q522	2SB956-R	TRANSISTOR	1	<R>
Q523	2SD601A-R	TRANSISTOR	1	<R>
		RESISTORS		
R502	ERJ3GEY0R00	M.RESISTOR CH 1/16W 0	1	
R503	ERJ3GEYJ103	M.RESISTOR CH 3W 10K	1	
R504	ERJ3GEYJ471	M.RESISTOR CH 3W 470	1	
R505	ERJ3GEYJ103	M.RESISTOR CH 3W 10K	1	
R506	ERJ3GEYJ332	M.RESISTOR CH 3W 3.3K	1	
R507	ERJ3GEYJ102	M.RESISTOR CH 3W 1K	1	
R508	ERJ3GEYJ183	M.RESISTOR CH 3W 18K	1	
R509,10	ERJ3GEYJ103	M.RESISTOR CH 3W 10K	2	
R511	ERJ3GEYJ333	M.RESISTOR CH 3W 33K	1	
R512	ERJ3GEYJ223	M.RESISTOR CH 3W 22K	1	
R516-21	ERJ3GEYJ101	M.RESISTOR CH 3W 100	6	
R522	ERJ3GEYJ122	M.RESISTOR CH 3W 1.2K	1	
R523,24	ERJ3GEYJ561	M.RESISTOR CH 3W 560	2	
R525	ERJ3GEYJ122	M.RESISTOR CH 3W 1.2K	1	
R526	ERJ3GEYJ470	M.RESISTOR CH 3W 47	1	
R527	ERJ3GEYJ105	M.RESISTOR CH 3W 1M	1	
R528	ERJ3GEYJ470	M.RESISTOR CH 3W 47	1	
R529	ERJ3GEYJ105	M.RESISTOR CH 3W 1M	1	
R530	ERJ3GEYJ272	M.RESISTOR CH 3W 2.7K	1	
R531	ERJ3GEYJ682	M.RESISTOR CH 3W 6.8K	1	
R532	ERJ3GEYJ470	M.RESISTOR CH 3W 47	1	
R533	ERJ3GEYJ105	M.RESISTOR CH 3W 1M	1	
R536	ERJ3GEYJ102	M.RESISTOR CH 3W 1K	1	
R537	ERJ3GEYJ122	M.RESISTOR CH 3W 1.2K	1	
R538	ERJ3GEYJ103	M.RESISTOR CH 3W 10K	1	
R539	ERJ3GEYJ222	M.RESISTOR CH 3W 2.2K	1	
R540	ERJ3GEYJ333	M.RESISTOR CH 3W 33K	1	
R541	ERJ3GEYJ103	M.RESISTOR CH 3W 10K	1	
R542	ERJ3GEYJ333	M.RESISTOR CH 3W 33K	1	
R543	ERJ3GEYJ102	M.RESISTOR CH 3W 1K	1	
R544	ERJ3GEYJ333	M.RESISTOR CH 3W 33K	1	
R545	ERJ3GEYJ103	M.RESISTOR CH 3W 10K	1	
R546	ERJ3GEYJ333	M.RESISTOR CH 3W 33K	1	
R547	ERJ3GEYJ102	M.RESISTOR CH 3W 1K	1	
R548	ERJ3GEYJ333	M.RESISTOR CH 3W 33K	1	
R549	ERJ3GEYJ103	M.RESISTOR CH 3W 10K	1	
R550	ERJ3GEYJ333	M.RESISTOR CH 3W 33K	1	
R551	ERJ3GEYJ102	M.RESISTOR CH 3W 1K	1	
R552-54	ERJ3GEYJ105	M.RESISTOR CH 3W 1M	3	
R555-57	ERJ3GEYJ472	M.RESISTOR CH 3W 4.7K	3	
R558	ERJ3GEYJ122	M.RESISTOR CH 3W 1.2K	1	
R559	ERJ3GEYJ123	M.RESISTOR CH 3W 12K	1	
R560	ERJ3GEYJ182	M.RESISTOR CH 3W 1.8K	1	
R561	ERJ3GEYJ102	M.RESISTOR CH 3W 1K	1	
R562	ERJ3GEYJ333	M.RESISTOR CH 3W 33K	1	
R563	ERJ3GEYJ123	M.RESISTOR CH 3W 12K	1	
R564	ERJ3GEYJ473	M.RESISTOR CH 3W 47K	1	
R565	ERJ3GEYJ153	M.RESISTOR CH 3W 15K	1	
R566	ERJ3GEYJ122	M.RESISTOR CH 3W 1.2K	1	
R567	ERJ3GEYJ102	M.RESISTOR CH 3W 1K	1	
R568	ERJ3GEYJ393	M.RESISTOR CH 3W 39K	1	
R569	ERJ3GEYJ183	M.RESISTOR CH 3W 18K	1	
R570	ERJ3GEYJ563	M.RESISTOR CH 3W 56K	1	
R571	ERJ3GEYJ223	M.RESISTOR CH 3W 22K	1	
R572	ERJ3GEYJ332	M.RESISTOR CH 3W 3.3K	1	

Ref.No.	Part No.	Part Name & Description	Pcs	Remarks
R573	ERJ3GEYJ102	M.RESISTOR CH 3W 1K	1	
R574	ERJ3GEYJ563	M.RESISTOR CH 3W 56K	1	
R575	ERJ3GEYJ153	M.RESISTOR CH 3W 15K	1	
R576	ERJ3GEYJ473	M.RESISTOR CH 3W 47K	1	
R577	ERJ3GEYJ123	M.RESISTOR CH 3W 12K	1	
R578	ERJ3GEYJ223	M.RESISTOR CH 3W 22K	1	
R579	ERJ3GEY0R00	M.RESISTOR CH 1/16W 0	1	
R580	ERJ3GEYJ332	M.RESISTOR CH 3W 3.3K	1	
R582	ERJ3GEY0R00	M.RESISTOR CH 1/16W 0	1	
R589,90	ERJ3GEYJ122	M.RESISTOR CH 3W 1.2K	2	
R591,92	ERJ3GEYJ123	M.RESISTOR CH 3W 12K	2	
R601-06	ERJ3GEYJ101	M.RESISTOR CH 3W 100	6	
R607-09	ERJ3GEYJ470	M.RESISTOR CH 3W 47	3	
VR504-06	EVM7JGA00B54	V.RESISTOR	3	
VR507-09	EVM7JGA00B24	V.RESISTOR	3	
**********	VEP00U25A	P.C.BOARD W/COMPONENT		
		VTR START		
SW2	EVQQSB04B	SWITCH	1	<R>
		MISCELLANEOUS		
	VST0190	SWITCH	1	
**********	VEP00U26A	P.C.BOARD W/COMPONENT		
		BATTERY		
		CAPACITORS		
C101-06	ECUX1E104ZFV	C.CAPACITOR CH 25V 0.001U	6	
C108	ECST1EY105Z	T.CAPACITOR 25V 1U	1	
C109	ECUX1H180JCV	C.CAPACITOR CH 50V 18P	1	
C110	ECUX1H220JCV	C.CAPACITOR CH 50V 22P	1	
C111	ECUX1H390JCV	C.CAPACITOR CH 50V 39P	1	
C112	ECST1CY155Z	T.CAPACITOR 16V 1.5U	1	
C113	ECST0JC226Z	T.CAPACITOR 6.3V 22U	1	
C201-06	ECUX1E104ZFV	C.CAPACITOR CH 25V 0.001U	6	
C208	ECST1EY105Z	T.CAPACITOR 25V 1U	1	
C209	ECUX1H180JCV	C.CAPACITOR CH 50V 18P	1	
C210	ECUX1H220JCV	C.CAPACITOR CH 50V 22P	1	
C211	ECUX1H390JCV	C.CAPACITOR CH 50V 39P	1	
C212	ECST1CY155Z	T.CAPACITOR 16V 1.5U	1	
C213,14	ECST0JC226Z	T.CAPACITOR 6.3V 22U	2	
C301-06	ECUX1E104ZFV	C.CAPACITOR CH 25V 0.001U	6	
C308	ECST1EY105Z	T.CAPACITOR 25V 1U	1	
C309	ECUX1H180JCV	C.CAPACITOR CH 50V 18P	1	
C310	ECUX1H220JCV	C.CAPACITOR CH 50V 22P	1	
C311	ECUX1H390JCV	C.CAPACITOR CH 50V 39P	1	
C312	ECST1CY155Z	T.CAPACITOR 16V 1.5U	1	
C313	ECST0JC226Z	T.CAPACITOR 6.3V 22U	1	

Ref.No.	Part No.	Part Name & Description	Pcs	Remarks
IC102	CXA1439M	IC	1	<R>
IC202	CXA1439M	IC	1	<R>
IC302	CXA1439M	IC	1	<R>
J1	ERJ3GEY0R00	M.RESISTOR CH 1/16W 0	1	
L101	VLQ0163J2R2	COIL 2.2UH	1	
L201	VLQ0163J2R2	COIL 2.2UH	1	
L301	VLQ0163J2R2	COIL 2.2UH	1	
P1	VJS2907B017	CONNECTOR (FEMALE)	1	
P2	VJS2907B016	CONNECTOR (FEMALE)	1	
Q101,02	2SD1819A-R	TRANSISTOR	2	<R>
Q201,02	2SD1819A-R	TRANSISTOR	2	<R>
Q301,02	2SD1819A-R	TRANSISTOR	2	<R>
		RESISTORS		
R101	ERJ3GEY0R00	M.RESISTOR CH 1/16W 0	1	
R102	ERJ3GEYJ472	M.RESISTOR CH 3W 4.7K	1	
R103	ERJ3GEYJ221	M.RESISTOR CH 3W 220	1	
R104	ERJ3GEYJ101	M.RESISTOR CH 3W 100	1	
R105	ERJ3GEYJ222	M.RESISTOR CH 3W 2.2K	1	
R106	ERJ3GEYJ472	M.RESISTOR CH 3W 4.7K	1	
R108	ERJ3GEY0R00	M.RESISTOR CH 1/16W 0	1	
R201	ERJ3GEY0R00	M.RESISTOR CH 1/16W 0	1	
R202	ERJ3GEYJ472	M.RESISTOR CH 3W 4.7K	1	
R203	ERJ3GEYJ221	M.RESISTOR CH 3W 220	1	
R204	ERJ3GEYJ101	M.RESISTOR CH 3W 100	1	
R205	ERJ3GEYJ222	M.RESISTOR CH 3W 2.2K	1	
R206	ERJ3GEYJ472	M.RESISTOR CH 3W 4.7K	1	
R208	ERJ3GEY0R00	M.RESISTOR CH 1/16W 0	1	
R301	ERJ3GEY0R00	M.RESISTOR CH 1/16W 0	1	
R302	ERJ3GEYJ472	M.RESISTOR CH 3W 4.7K	1	
R303	ERJ3GEYJ221	M.RESISTOR CH 3W 220	1	
R304	ERJ3GEYJ101	M.RESISTOR CH 3W 100	1	
R305	ERJ3GEYJ222	M.RESISTOR CH 3W 2.2K	1	
R306	ERJ3GEYJ472	M.RESISTOR CH 3W 4.7K	1	
R307	ERJ3GEY0R00	M.RESISTOR CH 1/16W 0	1	
**********	VEP86143A	P.C.BOARD W/COMPONENT		
		OPERATE		
D6001-03	BR1102W	DIODE	3	<R>
P501	VJP3125D010	CONNECTOR (MALE)	1	
SW6001-05	EVQPHB03T	SWITCH	5	<R>

Ref.No.	Part No.	Part Name & Description	Pcs	Remarks
**********	VEP00U21A	P.C.BOARD W/COMPONENT		
		MODE CHECK SW		
P9401	VJP1606T	CONNECTOR (MALE)	1	
SW9401	EVQQS205K	SWITCH	1	<R>
**********	VEP00U56A	P.C.BOARD W/COMPONENT		
		POWER SW		
P9400	VJP1607T	CONNECTOR (MALE)	1	
SW9400	VST0189	SWITCH	1	<R>
**********	VEP00U18A	P.C.BOARD W/COMPONENT		
		SUPER IRIS		
D9100	MA151WK	DIODE	1	<R>
SW9100	EVQQS307K	SWITCH	1	<R>
SW9101	EVQQS205K	SWITCH	1	<R>
		MISCELLANEOUS		
	VGQ3417	PUSH BUTTON SUPPOT (A)	1	
	VGQ3418	PUSH BUTTON SUPPOT (B)	1	

Ref.No.	Part No.	Part Name & Description	Pcs	Remarks
**********	VEP00U19A	P.C.BOARD W/COMPONENT		
		MONITOR VR		
VR9200	VRV0080	V.RESISTOR	1	
**********	VEP00U20A	P.C.BOARD W/COMPONENT		
		TOGGLE SW		
D9300,01	MA151WK	DIODE	2	<R>
P9300	VJP1612T	CONNECTOR (MALE)	1	
SW9300,01	VST0188	SWITCH	2	<R>
SW9302	VST0187	SWITCH	1	<R>
SW9303	VST0188	SWITCH	1	<R>
W9301-05	ERJ6GEY0R00	M.RESISTOR CH 1/10W 0	5	
		MISCELLANEOUS		
E46	VMP4267	SWITCH ANGLE	1	
**********	VEP06956A	P.C.BOARD W/COMPONENT		
		LCD		
		CAPACITORS		
C6901	ECEA0JKS330	E.CAPACITOR 6.3V 33U	1	
C6902	ECUM1H103KBN	C.CAPACITOR CH 50V 0.01U	1	
C6911	ECUM1H330JCN	C.CAPACITOR CH 50V 33P	1	
C6912	ECUM1H220JCN	C.CAPACITOR CH 50V 22P	1	
C6913,14	ECUM1H150JCN	C.CAPACITOR CH 50V 15P	2	
C6915	ECEA1EKS220I	E.CAPACITOR 25V 22U	1	
C6916	ECEA0JKS470	E.CAPACITOR 6.3V 47U	1	
C6917	ECUM1C105ZFN	C.CAPACITOR CH 16V 1U	1	
C6918	ECUM1E104ZFN	C.CAPACITOR CH 25V 0.1U	1	
C6919,20	ECUM1E104KBN	C.CAPACITOR CH 25V 0.1U	2	
C6921	ECUM1H103KBN	C.CAPACITOR CH 50V 0.01U	1	
C6923	ECEA1AKS101I	E.CAPACITOR 10V 100U	1	
C6924	ECUM1E563KBN	C.CAPACITOR CH 25V 0.056U	1	
C6925	ECEA0JKS101	E.CAPACITOR 6.3V 100U	1	
C6926	ECUM1E104ZFN	C.CAPACITOR CH 25V 0.1U	1	

Ref.No.	Part No.	Part Name & Description	Pcs	Remarks
C6927	ECUM1E104KBN	C.CAPACITOR CH 25V 0.1U	1	
C6928-32	ECUM1C105ZFN	C.CAPACITOR CH 16V 1U	5	
D6901	MA151K	DIODE	1	<R>
D6902	MA151WK	DIODE	1	<R>
D6904-06	MA151WK	DIODE	3	<R>
D6907	MA151K	DIODE	1	<R>
D6908	HZ16-1L	DIODE	1	<R>
D6909	MA704	DIODE	1	<R>
D6910	LN1236CP4	DIODE	1	<R>
D6911	MA151WK	DIODE	1	<R>
D6912-22	MA151K	DIODE	11	<R>
D6923,24	MA167	DIODE	2	<R>
IC6901	VSI1504	IC	1	<R>
IC6902	MN12821R	IC	1	<R>
IC6903	S81350HG	IC	1	<R>
IC6904	NJU7112AM	IC	1	<R>
IC6905	NJM386M	IC	1	<R>
IC6906	NJM4558M	IC	1	<R>
LCD6901	EDD085Y88A4P	LCD	1	
P6901	VJP3095	CONNECTOR (MALE)	1	
P6902	VJP1606T	CONNECTOR (MALE)	1	
P6903	VJP1986T	CONNECTOR (MALE)	1	
Q6901,02	2SD968-R	TRANSISTOR	2	<R>
Q6903	2SD602A-S	TRANSISTOR	1	<R>
Q6904	2SD1328-R	TRANSISTOR	1	<R>
QR6901	UN2113	TRANSISTOR-RESISTOR	1	<R>
		RESISTORS		
R6901	ERJ6GEYJ104	M.RESISTOR CH1/16W 100K	1	
R6902	ERJ6GEYJ471	M.RESISTOR CH1/16W 470	1	
R6903-10	ERJ6GEYJ102	M.RESISTOR CH1/16W 1K	8	
R6911-18	ERJ6GEYJ823	M.RESISTOR CH1/16W 82K	8	
R6919	ERJ6GEYJ334	M.RESISTOR CH1/16W 330K	1	
R6920	ERJ6GEYJ392	M.RESISTOR CH1/16W 3.9K	1	
R6924	ERJ6GEYJ104	M.RESISTOR CH1/16W 100K	1	
R6925	ERJ6GEYJ101	M.RESISTOR CH1/16W 100	1	
R6926	ERJ8GCYJ223	M.RESISTOR CH 1/8W 22K	1	
R6927	ERJ6GEYG304	M.RESISTOR CH1/16W 300K	1	
R6928	ERJ6GEYG473	M.RESISTOR CH1/16W 47K	1	
R6929	ERJ6GEYG563	M.RESISTOR CH1/16W 56K	1	
R6930	ERJ6GEYG472	M.RESISTOR CH1/16W 4.7K	1	
R6931	ERJ6GEYG563	M.RESISTOR CH1/16W 56K	1	
R6932	ERJ6GEYG155	M.RESISTOR CH1/16W 1.5M	1	
R6933	ERJ6GEYJ103	M.RESISTOR CH1/16W 10K	1	
R6934	ERJ6GEYJ104	M.RESISTOR CH1/16W 100K	1	
R6935-37	ERJ6GEYJ223	M.RESISTOR CH1/16W 22K	3	
R6938	ERJ6GEYJ104	M.RESISTOR CH1/16W 100K	1	
R6939	ERJ6GEYJ103	M.RESISTOR CH1/16W 10K	1	
R6940	ERJ6GEYJ104	M.RESISTOR CH1/16W 100K	1	
R6941	ERJ6GEYJ103	M.RESISTOR CH1/16W 10K	1	
R6942	ERJ6GEYJ104	M.RESISTOR CH1/16W 100K	1	
R6943	ERJ6GEYJ103	M.RESISTOR CH1/16W 10K	1	
R6945	ERJ6GEY0R00	M.RESISTOR CH 1/10W 0	1	
R6946-48	ERJ6GEYJ104	M.RESISTOR CH1/16W 100K	3	
R6949	ERJ6GEYJ101	M.RESISTOR CH1/16W 100	1	

Ref.No.	Part No.	Part Name & Description	Pcs	Remarks
R6950	ERJ6GEYJ102	M.RESISTOR CH1/16W 1K	1	
R6951	ERJ6GEYJ101	M.RESISTOR CH1/16W 100	1	
R6956	ERJ6GEYJ102	M.RESISTOR CH1/16W 1K	1	
R6957,58	ERJ8GCYJ122	M.RESISTOR CH 1/8W 1.2K	2	
R6959	ERJ6GEY0R00	M.RESISTOR CH 1/10W 0	1	
R6960-65	ERJ8GCYJ122	M.RESISTOR CH 1/8W 1.2K	6	
R6966	ERJ6GEYJ332	M.RESISTOR CH1/16W 3.3K	1	
R6967	ERJ6GEYJ223	M.RESISTOR CH1/16W 22K	1	
R6968	ERJ6GEYJ103	M.RESISTOR CH1/16W 10K	1	
R6969	ERJ6GEYJ222	M.RESISTOR CH1/16W 2.2K	1	
R6970,71	ERJ6GEYJ101	M.RESISTOR CH1/16W 100	2	
R6972-75	ERJ6GEYJ150	M.RESISTOR CH1/16W 15	4	
R6976	ERJ6GEYJ103	M.RESISTOR CH1/16W 10K	1	
R6977,78	ERJ6GEY0R00	M.RESISTOR CH 1/10W 0	2	
R6980,81	ERJ6GEYJ473	M.RESISTOR CH1/16W 47K	2	
R6982,83	ERJ6GEYJ104	M.RESISTOR CH1/16W 100K	2	
R6984	ERJ6GEYJ683	M.RESISTOR CH1/16W 68K	1	
R6985,86	ERJ6GEY0R00	M.RESISTOR CH 1/10W 0	2	
SW6901	VSS0186	SWITCH	1	<R>
SW6902	VSS0187	SWITCH	1	<R>
SW6903	VSS0186	SWITCH	1	<R>
SW6904	VSS0187	SWITCH	1	<R>
SW6905	VSS0186	SWITCH	1	<R>
SW6906	EVQQS205K	SWITCH	1	<R>
SW6907-10	EVQQSB04B	SWITCH	4	<R>
SW6911,12	VSS0187	SWITCH	2	<R>
SW6913	VSS0186	SWITCH	1	<R>
SW6914	VSS0187	SWITCH	1	<R>
VR6901,02	VRV0080	V.RESISTOR	2	
W90-99	ERJ6GEY0R00	M.RESISTOR CH 1/10W 0	10	
W100-02	ERJ6GEY0R00	M.RESISTOR CH 1/10W 0	3	
W105	ERJ6GEY0R00	M.RESISTOR CH 1/10W 0	1	
W109-14	ERJ6GEY0R00	M.RESISTOR CH 1/10W 0	6	
W116,17	ERJ6GEY0R00	M.RESISTOR CH 1/10W 0	2	
W118	ERJ8GCY0R00	M.RESISTOR CH 1/10W 0	1	
W119,20	ERJ6GEY0R00	M.RESISTOR CH 1/10W 0	2	
W121,22	ERJ8GCY0R00	M.RESISTOR CH 1/10W 0	2	
W123	ERJ6GEY0R00	M.RESISTOR CH 1/10W 0	1	
W124,25	ERJ8GCY0R00	M.RESISTOR CH 1/10W 0	2	
W126-28	ERJ6GEY0R00	M.RESISTOR CH 1/10W 0	3	
W129	ERJ8GCY0R00	M.RESISTOR CH 1/10W 0	1	
W130,31	ERJ6GEY0R00	M.RESISTOR CH 1/10W 0	2	
W132-53	ERJ8GCY0R00	M.RESISTOR CH 1/10W 0	22	
W154-58	ERJ6GEY0R00	M.RESISTOR CH 1/10W 0	5	
W159-61	ERJ8GCY0R00	M.RESISTOR CH 1/10W 0	3	
W162	ERJ6GEY0R00	M.RESISTOR CH 1/10W 0	1	
W163	ERJ8GCY0R00	M.RESISTOR CH 1/10W 0	1	
W164-71	ERJ6GEY0R00	M.RESISTOR CH 1/10W 0	8	
W172-76	ERJ8GCY0R00	M.RESISTOR CH 1/10W 0	5	
W177,78	ERJ6GEY0R00	M.RESISTOR CH 1/10W 0	2	
W179-92	ERJ8GCY0R00	M.RESISTOR CH 1/10W 0	14	
W193	ERJ6GEY0R00	M.RESISTOR CH 1/10W 0	1	
W194-01	ERJ8GCY0R00	M.RESISTOR CH 1/10W 0	8	
W202	ERJ6GEY0R00	M.RESISTOR CH 1/10W 0	1	
W203-09	ERJ8GCY0R00	M.RESISTOR CH 1/10W 0	7	
W210	ERJ6GEY0R00	M.RESISTOR CH 1/10W 0	1	
W211-15	ERJ8GCY0R00	M.RESISTOR CH 1/10W 0	5	
W216-18	ERJ6GEY0R00	M.RESISTOR CH 1/10W 0	3	
W219	ERJ8GCY0R00	M.RESISTOR CH 1/10W 0	1	
W220-24	ERJ6GEY0R00	M.RESISTOR CH 1/10W 0	5	
W225	ERJ8GCY0R00	M.RESISTOR CH 1/10W 0	1	
W226,27	ERJ6GEY0R00	M.RESISTOR CH 1/10W 0	2	
W228	ERJ8GCY0R00	M.RESISTOR CH 1/10W 0	1	
W229	ERJ6GEY0R00	M.RESISTOR CH 1/10W 0	1	
W230-32	ERJ8GCY0R00	M.RESISTOR CH 1/10W 0	3	
W233	ERJ6GEY0R00	M.RESISTOR CH 1/10W 0	1	

Ref.No.	Part No.	Part Name & Description	Pcs	Remarks
W239	ERJ6GEY0R00	M.RESISTOR CH 1/10W 0	1	
W241,42	ERJ8GCY0R00	M.RESISTOR CH 1/10W 0	2	
W243	ERJ6GEY0R00	M.RESISTOR CH 1/10W 0	1	
W245	ERJ6GEY0R00	M.RESISTOR CH 1/10W 0	1	
W267-72	ERJ8GCY0R00	M.RESISTOR CH 1/10W 0	6	
W273	ERJ6GEY0R00	M.RESISTOR CH 1/10W 0	1	
W274	ERJ8GCY0R00	M.RESISTOR CH 1/10W 0	1	
W275-77	ERJ6GEY0R00	M.RESISTOR CH 1/10W 0	3	
X6901	VSX0140	CRYSTAL OSCILLATOR	1	
X6902	VSX0094	CRYSTAL OSCILLATOR	1	
		MISCELLANEOUS		
	VGQ3415	BUTTON SUPPORT PLATE	1	
	VGQ3417	BUTTON HOLD TABLE	1	
	VWJ03CN060CC	FLEXIB.E CABLE	2	
**********	VEP00U22A	P.C.BOARD W/COMPONENT		
		GENLOCK		
P9500	VJP1602T	CONNECTOR (MALE)	1	
SW9500,01	ESD1111212	SWITCH	2	<R>
VR9500,01	VRV0109B103	V.RESISTOR 10K	2	
**********	VEP00U23A	P.C.BOARD W/COMPONENT		
		CAMERA OUT		
J1,J2	VJS3154	CONNECTOR (FEMALE)	2	
L9601	VLP0083	COIL	1	
P9600	VJP1608T	CONNECTOR (MALE)	1	
		RESISTORS		
R9601	ERDS2TJ750	C.RESISTOR 1/4W 75	1	

Ref.No.	Part No.	Part Name & Description	Pcs	Remarks
		MISCELLANEOUS		
E45	VMP4263	JACK ANGLE	1	
E44	XYN3+C6FCS	SCREW	2	
**********	VEK5868	P.C.BOARD W/COMPONENT		
		FE HEAD		
		CAPACITORS		
C1901	ECEA1CKS100	E.CAPACITOR 16V 10U		
C1902	VCYD1E103MR	S.CAPACITOR 25V 0.01U		
C1903	VCYD1E682KH	S.CAPACITOR 25V 0.68U		
C1904	ECQV1H563JZ	P.CAPACITOR 50V 0.056U		
L1901	VLQEL05R221K	COIL 220UH		
Q1901	2SC2603AE2F	TRANSISTOR		<R>
		RESISTORS		
R1901	ERDS2TJ822	C.RESISTOR 1/4W 8.2K		
T1901	VLQ0586	COIL		
**********	VEP03B06A	P.C.BOARD W/COMPONENT		
		RT FPC		
		MISCELLANEOUS		
	VJF1093	RT CONNECTOR	1	
**********	VEK6035	P.C.BOARD W/COMPONENT		
		PHOTO HOLDER (L)		
		MISCELLANEOUS		
	PN158NVNC	PHOTO TRANSISTOR	1	
	VMD0607	PHOTO HOLDER	1	
	VSH0026	LEAF SWITCH	1	

Ref. No.	Part No.	Part Name & Description	Pcs	Remarks
**********	VEK6098	P.C.BOARD W/COMPONENT		
		PHOTO HOLDER (R)		
		MISCELLANEOUS		
	PN158NV	PHOTO TRANSISTOR	1	
	VMD0606	PHOTO HOLDER (R)	1	
	VSQ0808	DEW SENSOR	1	
	VES0690	DETECTION SWITCH	1	
**********	VES0689	MECHANISM CONNECTION C.B.A.	1	
		(MODE SELECT SWITCH UNIT)		
Q1401	ON2170	PHOTO COUPULER	1	<R>
P1401	VJP3318A0008	CONNECTOR (MALE) 8P	1	
P1402	VJP1229R	CONNECTOR (MALE) 2P	1	
		MISCELLANEOUS		
	VEE2015	CABLE	1	(P1402-P6009)
	VMX1280	SENSOR SPACER	1	